441ball FBGA Specification

64Gb LPDDR5(X16, 4 Channel, 2CS)

H58G66MK6VX026
H58G66MK6QX026
H58G66MK6PX026

Revision History 25
Ordering Information 26
Functional Block Diagram 27
Package Informaiton – 441ball 4CH x64 Discrete Package, 0.65 mm x 0.65 mm using MO-TBD 28
Package Informaiton – Mechanical Specification 29
1 Scope 30
2 Overview 31
2.1 Features 31
2.2 Functional Description 31
2.2.1 Pad Definition and Description 33
2.2.2 Pin per byte 34
2.2.3 LPDDR5 Bank Architecture 35
2.2.3.1 Block diagram of bank configuration and Read operation outline 36
2.2.3.1.1 4Banks / 4Bank Groups Configuration 36
2.2.3.1.2 8Banks Mode Configuration 37
2.2.3.1.3 16Banks Mode Configuration 38
2.2.3.2 Address Translation Table 39
2.2.3.3 Bank architecture transition 39
2.2.3.4 Burst Operation 40
2.2.4 LPDDR5 SDRAM Addressing 47
2.2.5 Speed Grades 53
2.2.6 Burst Sequence 54
3 Clocking 55
4 Initialization and Training 58
4.1 Power-up, Initialization and Power-off Procedure 58
4.1.1 Voltage Ramp and Device Initialization 58
4.1.2 Reset Initialization with Stable Power 62
4.1.3 Power-off Sequence 62
4.1.4 Uncontrolled Power-off Sequence 62
4.2 Training 63
4.2.1 ZQ Calibration 63
4.2.1.1 Calibration During Powerup and Initialization 63
4.2.1.1.1 Background Calibration 64
4.2.1.1.2 Latching ZQ Calibration Results in Background Calibration Mode 65
4.2.1.1.3 Command-Based Calibration 65
4.2.1.1.4 Latching ZQ Calibration Results in Command-Based Calibration Mode 66
4.2.1.1.5 Maintaining Accurate Calibration - Background Calibration Mode 67
4.2.1.1.6 Maintaining Accurate Calibration - Command-Based Calibration Mode 68
4.2.1.1.7 Changing between Calibration Modes 68
4.2.1.1.7.1 Changing between Calibration Modes when DVFSQ is not active 68
4.2.1.1.7.2 Changing between Calibration Modes when DVFSQ is active 69
4.2.1.2 ZQ Stop Functionality 70
4.2.1.2.1 ZQ Resistor Sharing by Other Device(s) 70
4.2.1.2.1.1 ZQ Resistor Sharing in Background Calibration Mode 70
4.2.1.2.1.2 ZQ Resistor Sharing in Command-Based Calibration Mode 70
4.2.1.2.2 Stopping Background Calibration when DVFSQ is active 70
4.2.1.2.3 Stopping Background Calibration when VDDQ is Powered Off 71
4.2.1.3 ZQ Reset 72
4.2.1.4 Multi-die Package Considerations 72

4.2.1.4.1 Other Considerations in Background Calibration Mode 73
4.2.1.4.2 Other Considerations in Command-Based Calibration Mode 73
4.2.1.5 ZQ External Resistor, Tolerance, and Capacitive Loading 73
4.2.1.6 Flow Chart Examples 73
4.2.1 Command Bus Training 79
4.2.1.1 Three physical Mode Register 79
4.2.1.2 Command Bus Training Mode1 80
4.2.1.3 Command Bus Training Mode1 (FSP with DVFSQ enable) 88
4.2.1.4 Command Bus Training Mode2 93
4.2.1.5 Command Bus Training Mode2 (FSP with DVFSQ enable) 104
4.2.2 CA VREF Training 109
4.2.3 DQ VREF Training 109
4.2.4 WCK2CK Leveling 110
4.2.4.1 WCK2CK Leveling Mode (write-leveling called in LPDDR4) 110
4.2.4.2 WCK2CK Leveling Procedure and Related AC parameters 111
4.2.5 Duty Cycle Adjuster (DCA) 115
4.2.5.1 Duty Cycle Adjuster Range 115
4.2.5.2 Relationship between WCK waveform and DCA Code Change 116
4.2.5.3 The relationship between DCA Code Change and DQ output/RDQS timing 117
4.2.6 Duty Cycle Monitor (DCM) 118
4.2.6.1 DCM Functional Description 118
4.2.6.2 DCM Sequence 119
4.2.7 READ DQ Calibration 121
4.2.7.1 READ DQ Calibration Training Procedure 121
4.2.7.2 READ DQ Calibration Example 123
4.2.7.3 READ DQ Calibration after Power Down Exit 124
4.2.7.4 DMI Behavior Control for RDC 125
4.2.7.4.1.1 DMI Output Behavior Mode 1 125
4.2.7.4.1.2 DMI Output Behavior Mode 2 126
4.2.8 WCK-DQ Training 127
4.2.8.1 Training procedure 127
4.2.8.1.1 Relationship between MR setting and FIFO training behavior 128
4.2.8.1.1.1 DMI Output Behavior Mode 1 130
4.2.8.1.1.2 DMI Output Behavior Mode 2 131
4.2.8.2 WCK-RDQS_t/Parity Training 132
4.2.8.3 FIFO Pointer Reset and Synchronism 133
4.2.8.4 Command constraints for Write/Read FIFO command 138
4.2.9 RDQS toggle mode 141
4.2.10 Enhanced RDQS training mode 144
4.2.11 Read/Write-based WCK-RDQS_t Training 149
4.2.11.1 Relationship between MR setting and Read/Write-based WCK-RDQS_t Training behavior 150
5 Simplified LPDDR5 State Diagram 152
6 Mode Register Definition 157
6.1 Mode Register Assignment and Definition in LPDDR5 SDRAM 157
6.2 Mode Register Definition 160
6.2.1 Mode Register definition 160
7 Operating 210
7.1 Truth Table 210
7.1.1 Command Truth Table 210

7.2 WCK Operation 214
7.2.1 WCK2CK Synchronization operation 214
7.2.1.1 WCK2CK Synchronization 214
7.2.1.2 CAS Command with WCK2CK Synchronization Bits 214
7.2.1.3 WCK2CK Sync operation followed by a WRITE command 215
7.2.1.4 WCK2CK Sync operation followed by a READ command 217
7.2.1.5 WCK2CK Sync operation with CAS(WS_FAST=1) 220
7.2.1.6 Rank to rank WCK2CK Sync operation 222
7.2.2 WCK2CK SYNC Off Timing Definition 223
7.2.3 Write Clock Always on mode (WCK Always on mode) 233
7.3 Row operation 238
7.3.1 Active Command 238
7.3.1.1 8-Bank mode SDRAM Operation 240
7.3.1.2 BG mode SDRAM Operation 240
7.3.2 Pre-Charge Operation 241
7.3.2.1 Pre-Charge Operation 241
7.3.2.2 Auto-Precharge Operation 245
7.3.2.2.1 Delay time from Write to Read with Auto Precharge 246
7.3.2.2.2 Burst Read with Auto-Precharge 247
7.3.2.2.3 Burst Write with Auto-Precharge 248
7.4 Read/Write Operation 250
7.4.1 Read and Write Access Operations 250
7.4.2 Read Preamble and Postamble 250
7.4.3 Burst Read Operation 251
7.4.3.1 Read Timing 251
7.4.3.2 Read to Read Operation without additional WCK2CK-sync 252
7.4.3.3 Read to Read Operation with additional WCK2CK-sync 253
7.4.3.4 Read operation followed by write operation 253
7.4.4 READ Burst end to PRECHARGE Delay (tRBTP) 255
7.4.5 RDQS Mode 257
7.4.5.1 RDQS Timing 257
7.4.5.2 RDQS Related Functionalities 258
7.4.5.3 Mode Registers for RDQS 259
7.4.5.4 RDQS Pattern Definition 260
7.4.6 Write Preamble and Postamble 263
7.4.7 Burst Write Operation 264
7.4.7.1 Write Timing 264
7.4.7.2 Write to Write Operation without additional WCK2CK-sync 265
7.4.7.3 Write to Write Operation with additional WCK2CK-sync 266
7.4.7.4 Write operation followed by read operation 266
7.4.8 Read and Write Latency 267
7.4.8.1 Read and Read-to-Precharge Latencies 267
7.4.8.2 Write Latency 268
7.4.8.3 Write Recovery time 271
7.4.9 Masked Write 273
7.4.10 Data Mask (DM) and Data Bus Inversion (DBI-DC) Function 278
7.4.10.1 DMI Pin Behavior with Write Related Commands 279
7.4.10.2 DMI Pin Behavior with Read and MRR Commands 281
7.4.10.3 DMI Pin Behavior with Read FIFO and Read DQ Calibration Commands 282
7.5 Refresh operation 284

7.5.1 Refresh command 284
7.5.2 Refresh Requirement 292
7.5.3 Optimized Refresh 293
7.5.4 Self Refresh Operation 294
7.5.4.1 Power Down Entry and Exit during Self refresh 296
7.5.4.2 Command input Timing after Power Down Exit during Self Refresh 298
7.5.4.3 Self Refresh AC Timing Table 299
7.5.4.4 MRR, MRW, RFF, WFF, RDC, MPC Command during tXSR 300
7.5.5 Partial Array Self Refresh (PASR) 301
7.5.5.1 PASR Segment Masking 301
7.5.6 Partial Array Refresh Control (PARC) 301
7.5.7 Power Down 302
7.5.7.1 Power-Down Entry and Exit 302
7.5.8 Deep Sleep Mode 323
7.6 Other Operation 330
7.6.1 Mode Register Read 330
7.6.1.1 MRR after Read and Write Command 332
7.6.1.2 MRR after Power-Down Exit 334
7.6.2 Mode Register Write 335
7.6.2.1 Mode Register Write Disable control for Byte Mode device 335
7.6.3 Frequency Set Point 336
7.6.3.1 Frequency set point update Timing 338
7.6.3.2 Frequency set point update Timing for DVFSC and DVFSQ 339
7.6.4 On-Die Termination (ODT) 342
7.6.4.1 On-Die Termination for Command/Address Bus 342
7.6.4.1.1 ODT Mode Register and ODT State Table for Command/Address Bus 342
7.6.4.1.2 ODT Mode Register and ODT Characteristics for Command/Address Bus 344
7.6.4.1.3 ODT update time for Command/Address Bus 345
7.6.4.2 On-Die Termination for Data Bus 346
7.6.4.2.1 ODT Mode Register for Data Bus 346
7.6.4.2.2 Asynchronous ODT for Data Bus 346
7.6.4.2.3 ODT Mode Register and ODT Characteristics for Data Bus 348
7.6.4.3 On-Die Termination for WCK_t and WCK_c 350
7.6.4.3.1 ODT Mode Register for WCK_t/c 350
7.6.4.3.2 ODT during WCK2CK training 350
7.6.4.4 ODT Mode Register and ODT Characteristics for CS 351
7.6.4.4.1 ODT Mode Register and ODT Characteristics for CS 351
7.6.5 Non-target DRAM ODT 353
7.6.5.1 Non-target DRAM ODT control 354
7.6.5.2 Asynchronous NT-ODT 358
7.6.5.3 Timing diagram of Write case 368
7.6.5.4 Timing diagram of Read case 369
7.6.5.5 Rank2Rank Timing diagram of Write to Read case 370
7.6.6 NT-ODT behavior unification 371
7.6.6.1 Unified NT-ODT behavior 371
7.6.6.2 Effective MR set for NT ODT 373
7.6.6.3 Asynchronous NT-ODT 376
7.6.6.3.1 NT-ODT behavior for Write operation 376
7.6.6.3.2 NT-ODT behavior for Read operation 379
7.6.6.3.3 Timing diagrams for typical case 385

7.6.6.3.4 Rank to Rank Write to Read timing 388
7.6.7 Input Clock Stop and Frequency Change 390
7.6.8 V_{REF} Current Generator (VRCG) 391
7.6.9 VREF(CA) update timing 392
7.6.10 VREF(DQ) update timing 394
7.6.11 Thermal Offset 396
7.6.12 Temperature Sensor 396
7.6.13 Multi-Purpose Command (MPC) 397
7.6.14 tWCK2DQ Interval Oscillator 399
7.6.14.1 Interval Oscillator Matching Error 402
7.6.14.2 WCK2DQI/O interval Oscillator Readout Timing 405
7.6.14.2.1 WCK2DQI interval Oscillator 405
7.6.14.2.2 WCK2DQO interval Oscillator 406
7.6.14.3 WCK2DQI(O) Interval Oscillator Start/Stop Command Constraints 407
7.7 Specific features, Reliability & Power-optimization 408
7.7.1 Dynamic Voltage and Frequency Scaling (DVFS) 408
7.7.1.1 DVFSC Mode 408
7.7.1.2 DVFSQ Mode 410
7.7.1.2.1 DVFSQ High-to-Low Transition 410
7.7.1.2.2 DVFSQ Low-to-High Transition without VRCG during VDDQ ramp 411
7.7.1.2.3 DVFSQ Low-to-High Transition with VRCG 413
7.7.2 Data Copy Low Power Function 415
7.7.2.1 Write Data Copy Function 415
7.7.2.2 Read Data Copy Function 418
7.7.2.3 Read Data Copy Function with Read DBI Enable 419
7.7.3 Write X operation 420
7.7.4 Post Package Repair (PPR) 425
7.7.4.1 Guard Key Protection 426
7.7.4.2 PPR Fail Row Address Repair 427
7.7.5 Refresh Management Command 429
7.7.5.1 Refresh Management Command Definition 429
7.7.6 Decision Feedback Equalization (DFE) 439
7.7.7 Link ECC 441
7.7.8 Single-ended mode for Clock, Write Clock and RDQS 449
7.7.8.1 Relationship among CK, WCK and RDQS during Single-ended mode 450
7.7.8.2 Switching sequence between Single-ended and Differential 451
7.7.8.3 VRCG Enable timing 453
7.7.8.4 AC parameters for Single Ended (SE) 454
7.7.9 Enhanced WCK Always On Mode 455
7.7.9.1 CAS-command-based Enhanced WCK Always On Mode 455
7.7.9.2 Read/Write-command-based Enhanced WCK Always On Mode 457
7.7.10 Rank to Rank AC Parameter 458
8 Command Constraint and AC timing 459
8.1 Effective Burst Length (BL/n) Definition 459
8.2 Command Timing constraints 461
8.2.1 Read to Write Timing (tRTW) 477
8.2.2 Command constraint from Read to Write timing 477
8.2.2.1 In case of not supporting enhanced NT-ODT control 477
8.2.2.2 In case of supporting enhanced NT-ODT control 481
8.3 CAS Command Timing Constraints 485

8.4 Training related timing constraints 499
8.5 MRR/MRW Timing Constraints 500
8.6 Rank to Rank Command Timing Constraints 504
9 AC Timing 509
9.1 Core AC Timing Parameters by Speed Grade 509
9.1.1 Timing table for x16, DVFSC Disabled & Write Link ECC Disabled 509
9.1.1.1 Timing Table for x8 (Byte Mode) SDRAM 510
9.1.1.2 Timing Table for Write Link ECC is enabled 511
9.1.1.3 Timing Table for x8 (Byte Mode) SDRAM and Write Link ECC is enabled 512
9.1.2 Timing table for x16, DVFSC Enabled & Write Link ECC Disabled 513
9.1.2.1 Timing Table for x8 (Byte Mode) SDRAM 513
9.2 Core AC Temperature derating for AC Timing 514
10 Absolute Maximum DC Ratings 515
11 AC and DC Operating Condition 516
11.1 Recommended DC Operating Conditions 516
11.2 Input Leakage Current 520
11.3 Input/Output Leakage Current 520
11.4 Operating Temperature Range 521
11.4.1 Operating Temperature Range (Automotive spec addendum only) 522
11.5 Electrostatic Discharge Sensitivity Characteristics 522
12 AC and DC Input/Output Measurement levels 523
12.1 1.05V High speed LVCMOS 523
12.1.1 Standard specifications 523
12.1.2 Input Level for Reset_n 523
12.1.3 Input Level for CS 523
12.1.4 AC Overshoot / Undershoot 523
12.1.4.1 AC Overshoot / Undershoot 523
12.1.4.2 AC Overshoot / Undershoot for LVSTL 523
12.2 Differential Input Voltage 524
12.2.1 Differential Input Voltage for CK 524
12.2.1.1 Peak Voltage Calculation Method 525
12.2.1.2 Single ended Input Voltage for CK 526
12.2.1.3 Differential Input Slew Rate Definition for CK 527
12.2.1.4 Differential Input Cross Point Voltage for CK 528
12.2.2 Differential Input Voltage for WCK 529
12.2.2.1 Peak Voltage Calculation Method 530
12.2.2.2 Single ended Input Voltage for WCK 531
12.2.2.3 Differential Input Slew Rate Definition for WCK 532
12.2.2.4 Differential Input Cross Point Voltage for WCK 533
12.3 Output Slew Rate 534
12.3.1 Single Ended Output Slew Rate 534
12.3.2 Differential Output Slew Rate 535
12.4 Driver Output Timing Reference load 536
12.5 Single Ended WCK 537
12.5.1 Single Ended WCK input definitions 537
12.5.2 Single Ended Mode WCK Pulse Definitions 537
12.6 Single Ended CK 538
12.6.1 Single Ended CK input definitions 538
12.6.2 Single Ended Mode CK Pulse Definitions 539
12.7 Read Timing tLZ(DQS), tLZ(DQ), tHZ(DQS), tHZ(DQ) Calculation 540

12.7.1 tLZ(RDQS) tLZ(DQ) tHZ(RDQS) tHZ(DQ) 540
12.7.1.1 tLZ(RDQS) and tHZ(RDQS) Calculation for ATE(Automatic Test Equipment) 540
12.7.1.2 tLZ(DQ) and tHZ(DQ) Calculation for ATE (Automatic Test Equipment) 542
13 Input / Output Capacitance 545
14 IDD Specification Parameters and Test Conditions 547
14.1 IDD Measurement Conditions 547
14.2 IDD Specifications 557
15 Electrical Characteristics and AC Timing 561
15.1 Clock Specification 561
15.1.1 Definition for tCK(avg) and nCK 561
15.1.2 Definition for tCK(abs) 561
15.1.3 Definition for tCH(avg) and tCL(avg) 561
15.1.4 Definition for tCH(abs) and tCL(abs) 562
15.1.5 Definition for tJIT(per) 562
15.1.6 Definition for tJIT(cc) 562
15.1.7 Clock Timing 562
15.2 Write Clock Specification 564
15.2.1 Definition for tWCK(avg) and nWCK 564
15.2.2 Definition for tWCK(abs) 564
15.2.3 Definition for tWCH(avg) and tWCL(avg) 564
15.2.4 Definition for tWCH(abs) and tWCL(abs) 565
15.2.5 Definition for tJIT(per) 565
15.2.6 Definition for tJIT(cc) 565
15.2.7 Definition for tERR(2per) 565
15.2.8 Definition for tERR(3per) 565
15.2.9 Definition for tERR(4per) 566
15.2.10 Write Clock Timing 566
15.3 tWCK2DQ AC parameters 568
15.4 DQ Tx Jitter Spec 569
15.5 CS Rx specification 574
15.5.1 CS Rx mask and single pulse definition for Synchronous mode 574
15.5.2 CS Rx input level definition for Asynchronous mode 575
15.5.3 Synchronous mode CS Rx mask / single pulse spec and Asynchronous mode CS input spec 576
15.6 CA Rx specification 577
15.6.1 CA Rx mask and single pulse definition 577
15.6.2 CA Rx mask and single pulse specification 579
15.6.3 tCA2CA_share definition 580
15.7 DQ, DMI, Parity and DBI Rx specification 581
15.7.1 DQ, DMI, Parity and DBI Rx mask and single pulse definition 581
15.8 Pull Up/Pull Down Driver Characteristics and Calibration 585
15.9 Output Driver and Termination Resistance Temperature and Voltage Sensitivity 586
16 Die configuration, Package ballout & Pin Definition 588
16.1 Package Configuration 588
16.1.1 Package Considerations for Byte-Mode Devices 588
16.2 Pad Order 589
16.3 Package Die Layout 590
16.4 Package Configuration 591
16.5 ZQ Wiring 591

Figure 1 — BG Mode Configuration Example (One Channel Shown) 36

Figure 2 — 8B Mode Configuration Example (One Channel Shown)....37
Figure 3— 16B Mode Configuration Example (One Channel Shown)....38
Figure 4 — Read Operation BG mode, CKR (WCK vs. CK) = 4:1, BL=16....41
Figure 5 — Read Operation BG mode, CKR (WCK vs. CK) = 4:1, BL=32....42
Figure 6 — Read Operation 8B mode, CKR (WCK vs. CK) = 4:1, BL=32....44
Figure 7 — Read Operation 16B mode, CKR (WCK vs. CK) = 4:1, BL=16....45
Figure 8 — Read Operation 16B mode, CKR (WCK vs. CK) = 4:1, BL=32....46
Figure 9 - Clocking and Interface Relationship: Write to Read timing, 16B mode, CKR=4:1, BL=16, WCK Always On mode....56
Figure 10 - Clocking and Interface Relationship: Write to Read timing, 16B mode, CKR=2:1, BL=16, WCK Always On mode....56
Figure 11 - Block Diagram of an example system: CKR=4:1....57
Figure 12 — Requirement for Voltage Ramp Control....59
Figure 13 — Power Ramp and Initialization Sequence....60
Figure 14 - Background ZQ Calibration Timing....64
Figure 15 - Background to Command-based Switching when DVFSQ is not active....68
Figure 16 - Command=based to Background Switching when DVFSQ is not active....69
Figure 17 - Background to Command-based Switching when DVFSQ is active....69
Figure 18 - Command=based to Background Switching when DVFSQ is active....70
Figure 19 - ZQCal Timing....72
Figure 20 - Initialization to Background Calibration Flow Chart, no DVFSQ support....74
Figure 21 - Initialization to Command-based Calibration Flow Chart, no DVFSQ support, option 1 (check Master)....75
Figure 22 - Initialization to Command-based Calibration Flow Chart, no DVFSQ support, option 2 (ignore Master)....76
Figure 23 - Initialization to Background Calibration Flow Chart, with DVFSQ support....77
Figure 24 - Initialization to Command-based Calibration Flow Chart, with DVFSQ support....78
Figure 25 - Entering Command Bus Training Mode and CA Training Pattern Input and Output (WCK Frequency change)....83
Figure 26 - Entering Command Bus Training Mode and CA Training Pattern Input and Output (WCK Frequency change: Fall Edge Training)....84
Figure 27 - Entering Command Bus Training Mode and CA Training Pattern Input and Output (Fixed WCK Frequency)....85
Figure 28 – Consecutive CA input and Exiting Command Bus Training Mode....86
Figure 29 - Entering Command Bus Training Mode and CA Training Pattern Input and Output (Background ZQ Calibration)....89
Figure 30 - Entering Command Bus Training Mode and CA Training Pattern Input and Output (Command-based ZQ Calibration)....90
Figure 31 – Consecutive CA input and Exiting Command Bus Training Mode....91
Figure 32 – Consecutive CA input and Exiting Command Bus Training Mode....92
Figure 33 - Entering Command Bus Training Mode and CA Training Pattern Input with VREF(CA) Value Update (WCK Frequency change)....98
Figure 34 - Entering Command Bus Training Mode and CA Training Pattern Input with VREF(CA) Value Update (Fixed WCK Frequency)....99
Figure 35 - CA pattern Input/Output to Vref setting Input....100
Figure 36 - Consecutive CA training pattern Input/Output....101
Figure 37 - Exiting Command Bus Training Mode....102
Figure 38 - Entering Command Bus Training Mode and CA Training Pattern Input with VREF(CA) Value Update (Background ZQ Calibration)....105
Figure 39 - Entering Command Bus Training Mode and CA Training Pattern Input with VREF(CA) Value Update (Command-based ZQ Calibration)....106
Figure 40 - Exiting Command Bus Training Mode(Background ZQ Calibration)....107
Figure 41 - Exiting Command Bus Training Mode(Command-based ZQ Calibration)....108
Figure 42 - WCK2CK Leveling entry and leveling result output....111
Figure 43 - Consecutive WCK2CK Leveling and WCK2CK leveling Exit....112

Figure 44 — Relationship between WCK waveform and DCA Code Change (Example) 116
Figure 45 — Relationship between WCK waveform and DQS_t/c and DQ output (Example) . 117
Figure 46 — Read DQ Calibration Timing: Read to Read DQ Calibration 122
Figure 47 — Read DQ Calibration Timing: Read DQ Calibration to Read DQ Calibration 123
Figure 48 — READ DQ CALIBRATION following Power Down State 124
Figure 49 - Consecutive Write FIFO Operation timing for BG mode: CKR (WCK vs. CK) = 4:1 134
Figure 50 - Consecutive Read FIFO Operation timing for BG mode: CKR (WCK vs. CK) = 4:1 135
Figure 51 - Consecutive Write FIFO Operation timing: WCK-RDQS_t/Parity Training is enabled for BG mode: CKR (WCK vs. CK) = 4:1 136
Figure 52 - Consecutive Read FIFO Operation timing: WCK-RDQS_t/Parity Training is enabled for BG mode: CKR (WCK vs. CK) = 4:1 137
Figure 53 - Write FIFO to Read FIFO Timing for BG mode: CKR (WCK vs. CK) = 4:1 139
Figure 54 - Read FIFO to Write FIFO Timing for BG mode: CKR (WCK vs. CK) = 4:1 140
Figure 55 - RDQS toggle mode entry timing example 143
Figure 56 - RDQS toggle mode exit timing example 143
Figure 57 - Enhanced RDQS training mode entry timing 146
Figure 58 - Enhanced RDQS training mode exit timing 147
Figure 59 - Read operation during Enhanced RDQS training mode 148
Figure 60 — LPDDR5: Simplified Bus Interface State Diagram 153
Figure 61 — Sub-State Diagram-1 related with MRR, MRW, CAS, WFF, RFF, RDC and MPC Command 154
Figure 62 — Sub-State Diagram-2: related with MPC State 155
Figure 63 — Aligned WCK/2_0 to CK (Left) & Miss-Aligned WCK/2_0 to CK (Right) 214
Figure 64 — LPDDR5 WCK2CK Sync operation by CAS command with WCK2CK Sync operand enabled 215
Figure 65 — WCK2CK Sync operation followed by a WRITE command 216
Figure 66 — WCK2CK Sync operation followed by a READ command 217
Figure 67 — Minimum latency WCK2CK Sync operation for CAS(WS_FAST=1) 220
Figure 68 — WCK2CK sync operation for Read Operation with CAS(WS_FAST=1) with command gap 220
Figure 69 — Minimum gap rank to rank read operation with WCK2CK Sync after completing DQ burst in one rank 222
Figure 70 — Simultaneous WCK2CK Sync process for multi-ranks (especially two ranks) 222
Figure 71 - WCK Always on mode starting with WCK2CK-sync operation followed by a write command: 16B Mode 234
Figure 72 - WCK Always on mode starting with WCK2CK-sync operation followed by a read command: BG Mode, NT-ODT Disable 235
Figure 73 – Write to CAS(WS_OFF) timing: 16B mode, CKR4:1, tWCKPST=6.5tWCK 237
Figure 74 – Read to CAS(WS_OFF) Timing: 16B mode, CKR4:1, tWCKPST=6.5tWCK 237
Figure 75 — Activate command for 8B/16B mode 238
Figure 76 — Activate Command with Activate1 and Activate-2 spacing for 8B/16B mode 239
Figure 77 — Activate command for BG mode 239
Figure 78 — 8 Banks tFAW Timing 240
Figure 79 — BG mode tFAW timing 240
Figure 80 — Burst Read followed by Precharge: 16B Mode, CKR = 4:1, BL=16 243
Figure 81 — Burst Read followed by Precharge: 16B Mode, CKR = 4:1, BL=32 244
Figure 82 — Burst Write Followed by Precharge: 16B Mode, CKR = 4:1, BL=16 245
Figure 83 — Command Input Timing with RAS lock 246
Figure 84 — Delay time from Write to Read with Auto Precharge: 16B mode 246
Figure 85 — Burst Read with Auto-Precharge: 16B mode 247
Figure 86 — Burst Write with Auto- Precharge: 16B mode 248
Figure 87 - Burst Read Operation 251

Figure 88 - Back to back read operation with BL/n_min, BG mode, WCK:CK = 4:1, tWCKPST = 2.5tWCK 252
Figure 89 - Back to back read operation without additional WCK2CK sync sequence, BG mode, WCK:CK = 4:1, tWCKPST = 2.5tWCK 252
Figure 90 - Back to back read operation requiring a new WCK2CK-sync sequence (16B mode, WCK:CK = 4:1, tWCKPST = 2.5tWCK) 253
Figure 91 - Read operation followed by write operation without additional WCK2CK-sync sequence (16B mode, WCK:CK = 4:1, tWCKPST = 2.5tWCK) 253
Figure 92 - Read operation followed by write operation with additional WCK2CK-sync sequence (16B mode, WCK:CK=4:1, tWCKPST=2.5tWCK) 254
Figure 93 — Example of READ burst end to PRECHARGE command delay for same banks 255
Figure 94 — Example of READ burst end to PRECHARGE command delay for same banks 255
Figure 95 — Example of READ burst end to PRECHARGE command delay for same banks 256
Figure 96 — Example of READ burst end to PRECHARGE command delay for same banks 257
Figure 97 — Read timing with RDQS and related timing parameters 258
Figure 98 — 4 All the possible types of RDQS 259
Figure 99 — READ16 to READ16 2nCK Gap Operation: CKR (WCK vs. CK) = 4:1, tRPST=2.5nWCK 260
Figure 100 — BG Mode Read32 Operation: CKR (WCK vs. CK) = 4:1, tRPST=2.5nWCK 260
Figure 101 - Burst Write Operation 264
Figure 102 - Back to back write operation with BL/n_min, BG mode, WCK:CK = 4:1, tWCKPST=2.5tWCK 265
Figure 103 - Back to back write operation without additional WCK2CK sync sequence, BG mode, WCK:CK = 4:1, tWCKPST = 2.5tWCK 265
Figure 104 - Back to back write operation requiring a new WCK2CK-sync sequence 266
Figure 105 - Write operation followed by read operation with additional WCK2CK-sync sequence (16B mode, WCK:CK = 4:1, tWCKPST = 2.5tWCK) 266
Figure 106 — Write Latency Timing 270
Figure 107 — Write Recovery Latency Timing 272
Figure 108 — Masked Write Command – Same Bank Operation Timing without any other DQ operation commands in 4Bank/4BG or 16Bank mode 274
Figure 109 — Masked Write Command – Different Bank Group Operation Timing in 4Bank/4BG mode 275
Figure 110 — Masked Write Command – Different Bank Operation Timing in 8-Bank Mode (BL32 only) 276
Figure 111 — Masked Write Command – 16 Bank Mode (WCK:CK = 2:1) 277
Figure 112 — All-Bank Refresh Operation 288
Figure 113 — Per-Bank Refresh Operation 288
Figure 114 — Postponing Refresh Commands (Example) 291
Figure 115 — Pulling-in Refresh Commands (Example) 291
Figure 116 - Optimized Refresh Operation 293
Figure 117 — Self Refresh Entry/Exit Timing 295
Figure 118 — Self Refresh Entry/Exit Timing with Power Down Entry/Exit 296
Figure 119 — Self Refresh Entry with PD=”1” Timing 297
Figure 120 — Command input timing after Power Down Exit during Self Refresh 298
Figure 121 — MRR, MRW, WFF, RFF, RDC and MPC Commands Issuing Timing during tXSR 300
Figure 122 Basic Power-Down Entry and Exit Timing 304
Figure 123 - Basic Power-Down Entry and Exit Timing: CS ODT Enable 305
Figure 124 – Basic Power-Down Entry and Exit Timing during WCK2CK Sync state 306
Figure 125 - Read and Read with AP to Power-Down Entry: 8B Mode CKR=4:1, NT-ODT=Disable 307
Figure 126 - Read and Read with AP to Power-Down Entry: 16B Mode CKR=2:1, NT-ODT=Disable 308
Figure 127 - Read with AP to Power-Down Entry: 16B Mode CKR=4:1 NT-ODT=Enable 309

Figure 128 - Read and Read with AP to Power-Down Entry: BG Mode CKR=4:1 NT-ODT=Enable 310
Figure 129 - Write and Masked Write to Power-Down Entry 311
Figure 130 - Write with AP and Masked Write with Auto Precharge to Power-Down Entry 312
Figure 131 - Mode Register Read to Power-Down Entry: 8B Mode CKR=4:1 313
Figure 132 - Mode Register Read to Power-Down Entry: 16B Mode CKR=2:1 314
Figure 133 - Mode Register Read to Power-Down Entry: 16B Mode CKR=4:1 NT-ODT=Enable 314
Figure 134 - Mode Register Read to Power-Down Entry: BG Mode CKR=4:1 NT-ODT=Enable 315
Figure 135 - Mode Register Write to Power Down Entry 316
Figure 136 – CAS(WS_FS) to Power Down Entry 316
Figure 137 - Multi Purpose Command for Start ZQ Calibration to Power-Down Entry 317
Figure 138 - Multi Purpose Command for ZQ Latch Command to Power-Down Entry 317
Figure 139 - MPC for Start WCK2DQI Interval Oscillator to Power-Down Entry 318
Figure 140 - MPC for Stop WCK2DQI Interval Oscillator to Power-Down Entry 318
Figure 141 - MPC for Start WCK2DQO Interval Oscillator to Power-Down Entry 318
Figure 142 - MPC for Stop WCK2DQO Interval Oscillator to Power-Down Entry 319
Figure 143 - Deep Sleep Mode state diagram 323
Figure 144 - Deep Sleep Mode Entry in IDLE state and Exit Timing: CS ODT Disable 325
Figure 145 - Deep Sleep Mode Entry in IDLE state and Exit Timing: CS ODT Enable 326
Figure 146 - Deep Sleep Mode Entry in Self Refresh state and Exit Timing: CS ODT Disable 327
Figure 147 - Deep Sleep Mode Entry in Self Refresh state and Exit Timing: CS ODT Enable 328
Figure 148 — Mode Register Read Operation 331
Figure 149 — READ to MRR Timing 332
Figure 150 — WRITE to MRR Timing 333
Figure 151 — MRR Following Power-Down 334
Figure 152 — Mode Register Write Timing 335
Figure 153 — Frequency Set Point Switching Timing 338
Figure 154 — Training Three Frequency Set-Points 340
Figure 155 — Switching Between Two Trained Frequency Set-Points (Example) 341
Figure 156 — Switching to a Third Trained Frequency Set-Point (Example) 341
Figure 157 — Functional Representation of Command/Address bus ODT 342
Figure 158 — On Die Termination for Command/Address Bus 344
Figure 159 — ODT for Command/Address setting update timing 345
Figure 160 — Functional Representation of Data bus ODT 346
Figure 161 — Asynchronous ODTon/ODToff Timing 348
Figure 162 — On Die Termination for Data Bus 348
Figure 163 — Functional Representation of WCK ODT 350
Figure 164 - Functional Representation of CS 351
Figure 165 - On Die Termination for CS 351
Figure 166 - DRAM ODT configuration of Non-target DRAM ODT mode 353
Figure 167 - ODT Control on Non-target DRAM for Write 368
Figure 168 - ODT Control on Non-target DRAM for Read (MR0 OP[0]=0_B) 369
Figure 169 - ODT Control on Non-target DRAM for Read (MR0 OP[0]=1_B) 369
Figure 170 - Write to Read Rank2Rank Operation (MR OP[0]=0_B) 370
Figure 171 - Write to Read Rank2Rank Operation (MR OP[0]=1_B) 370
Figure 172 - ODT, NT ODT Timing for Write BG Mode: CKR (WCK vs. CK) = 4:1, BL=16 377
Figure 173 - ODT Control on Non-target DRAM for Read (MR0 OP[0]=1_B) 380
Figure 174 - ODT, NT ODT Timing for Read BG Mode: CKR (WCK vs. CK) = 4:1, BL=16 RDQS = Disabled, MR0 OP[0]=1_B 381
Figure 175 - NT ODT State at Idle 385
Figure 176 - NT ODT Timing at Write X for Write BG Mode: CKR (WCK vs. CK) = 4:1, BL=16 386

Figure 177 - ODT, NT ODT Timing for Write w/ Link ECC BG Mode: CKR (WCK vs. CK) = 4:1, BL=16 386
Figure 178 - NT ODT Timing at Write X with Write Link ECC for Write BG Mode: CKR (WCK vs. CK) = 4:1, BL=16 387
Figure 179 - Write to Read Rank2Rank Operation (MR0 OP[0]=1_B) 388
Figure 180 - Write to Read Rank2Rank Operation w/ Link ECC (MR0 OP[0]=1_B) 389
Figure 181 — VRCG Enable Timing 391
Figure 182 — VRCG Disable Timing 391
NOTE 2 Only DES Command is allowed till tVREFCA_Short/Long is satisfied. Figure 183 - V_{REF}(CA) update timing: VRCG is High Current Mode 392
Figure 184 - V_{REF}(CA) update timing: VRCG is Normal Operation 392
Figure 185 - V_{REF}(DQ) update timing: VRCG is High Current Mode 394
Figure 186 - V_{REF}(DQ) update timing: VRCG is Normal Operation 394
Figure 187 — Temp Sensor Timing 397
Figure 188 - Interval oscillator offset_temp 402
Figure 189 - Interval oscillator offset_volt 402
Figure 190 - In case of WCK2DQI Interval Oscillator is stopped by MPC Command 405
Figure 191 - In case of WCK2DQI Interval Oscillator is stopped by Interval Timer 405
Figure 192 - In case of WCK2DQO Interval Oscillator is stopped by MPC Command 406
Figure 193 - In case of WCK2DQO Interval Oscillator is stopped by Interval Timer 406
Figure 194 - WCK2DQI/WCK2DQO Interval Oscillator Start/Stop Command Constraints Timing 407
Figure 195 DVFSC High (VDD2H) to Low (VDD2L) Transition 409
Figure 196 DVFSC Low (VDD2L) to High (VDD2H) Transition 409
Figure 197 Example DVFSC Block Diagram 409
Figure 198 - Data copy granularity and reference data configuration in BL32 415
Figure 199 - Example of Write Data Copy Function Timing Diagram 417
Figure 200 - Example of Read Data Copy Function Timing Diagram 419
Figure 201 - Write X timing at Sync off: BG Mode, CKR (WCK vs. CK) = 4:1, BL=16 421
Figure 202 - Consecutive Write and Write X timing at Sync off: BG Mode, CKR (WCK vs. CK) = 4:1, BL=16 421
Figure 203 - Consecutive Write and Write X timing at Sync: BG Mode, CKR (WCK vs. CK) = 4:1, BL=16 422
Figure 204 - Write w/ write X issuing timing at Sync state. 423
Figure 205 – CAS_WRX Command timing after WCK2CK sync state is expired 423
Figure 206 - Guard Key Timing Diagram 426
Figure 207 - PPR Timing 427
FIGURE 208 SUB-BANK ADDRESSING EXAMPLE 434
Figure 209 — DFE pre-drive requirement 440
Figure 210 - Write command showing link ECC transfer 441
Figure 211 - Read command showing Link ECC transfer 442
Figure 212 - Data flow on a memory Write operation 446
Figure 213 - Data flow on a memory Read operation 447
Figure 214 - Timing Relationship among CK, WCK and RDQS 450
Figure 215 - SE to Differential CK and Write DQS -FSP Switching Timing 451
Figure 216 - Differential to SE CK and Write DQS -FSP Switching Timing 452
Figure 217 - VRCG status change to high current mode: Single-ended Clock Case 453
Figure 218 - VRCG status change to high current mode: Differential Clock Case 453
Figure 219 - Enhanced WCK Always On Mode Timing Example 456
Figure 220 - RD/WR-command-based Enhanced WCK Always On Mode Timing Example 457
Figure 221 - Write Timing Diagram (BG mode, CKR=4:1, BL32) Example for BL/n, BL/n_min and BL/n_max 460
Figure 222 - DC Voltage Range 517
Figure 223 - VDDQ Tolerance Definition in Allowable Range 517

Figure 224 - Zprofile Z(f) of the system at the DRAM package solder ball (without the DRAM component) 518
Figure 225 - A simplified Z(f) system electrical model and frequency response of the behavioral PDN electrical load model without the DRAM component per voltage domain per channel. 519
Figure 226 — Overshoot and Undershoot Definition 524
Figure 227 — CK Differential Input Voltage 524
Figure 228 — Definition of differential Clock Peak Voltage 525
Figure 229 — Clock Single ended Input Voltage 526
Figure 230 — Differential Input Slew Rate Definition for CK_t, CK_c 527
Figure 231 — Differential Input Slew Rate Definition for CK_t, CK_c 528
Figure 232 — WCK Differential Input Voltage 529
Figure 233 — Definition of differential WCK Peak Voltage 530
Figure 234 — WCK Single ended Input Voltage 531
Figure 235 — Differential Input Slew Rate Definition for WCK_t, WCK_c 532
Figure 236 — Vix Definition (WCK) 533
Figure 237 - Single Ended Output Slew Rate Definition 534
Figure 238 - Differential Output Slew Rate Definition 535
Figure 239 - Driver Output Reference Load for Timing 536
Figure 240 — Single Ended Mode WCK input Voltage 537
Figure 241 — Single Ended Mode WCK pulse 537
Figure 242 — Single Ended Mode CK input Voltage 538
Figure 243 — Single Ended Mode CK pulse 539
Figure 244 — tLZ(RDQS) method for calculating transitions and end point 540
Figure 245 — tHZ(RDQS) method for calculating transitions and end point 541
Figure 246 — tLZ(DQ) method for calculating transitions and end point 542
Figure 247 — tHZ(DQ) method for calculating transitions and end point 543
Figure 248 - N-UI DQ to RDQS output timing definitions 569
Figure 249 - tQW example of eyewidth per pin and relationship of tDQSQ(pin) and tQH(pin) across byte group 570
Figure 250 - Read burst example for pin DQx depicting bits 0 and 5 relative to the RDQS edge for 0 UI mismatch 571
Figure 251 - Read burst example for pin DQx depicting bits 0 and 5 relative to the RDQS edge for 3UI mismatch 572
Figure 252 Synchronous mode CS Rx Mask definition 574
Figure 253 Synchronous mode CS Rx single pulse definition 574
Figure 254 Synchronous mode CS Timings at the DRAM Pin 575
Figure 255 Asynchronous mode ViHPD and ViLPD at Power Down Exit 575
Figure 256 CA Rx Mask definition 577
Figure 257 CA Rx single pulse definition 577
Figure 258 CA timings at the DRAM Pins 578
Figure 259 - CK_t Rising Edge CA mask 580
Figure 260 - CK_t Falling Edge CA mask 580
Figure 261 - DQ, DMI, Parity and DBI Rx Mask definition 581
Figure 262 - DQ to WCK tWCK2DQI and tDQ2DQ Timings at the DRAM pins referenced from the internal latch 582
Figure 263 - DQ, DMI, Parity and DBI Rx single pulse definition 583
Figure 264 — Example of rank assignment for a single-channel dual-rank package 588

Table 1 — Pad Definition and Description 33
Table 2 — Pins Per-Byte Signal List/Description for Link Protection disabled 34
Table 3 — Pins Per-Byte Signal List/Description for Link Protection enabled 34
Table 4 - Address Translation Table 39
Table 5 — LPDDR5 SDRAM x16 mode Addressing for BG Mode (4Banks/4Bank Groups) 47
Table 6 — LPDDR5 SDRAM x8 mode Addressing for BG Mode 48
Table 7 — LPDDR5 SDRAM x16 mode Addressing for 8B Mode 49
Table 8 — LPDDR5 SDRAM x8 mode Addressing for 8B Mode 50
Table 9 — LPDDR5 SDRAM x16 mode Addressing for 16B Mode 51
Table 10 — LPDDR5 SDRAM x8 mode Addressing for 16B Mode 52
Table 11 — LPDDR5 Speed Grades 53
Table 12 — Burst Sequence for READ (8bank mode) 54
Table 13 — Burst Sequence for READ (4bank/ 4Bank Group mode or 16Bank mode) 54
Table 14 — Burst sequence for Write 54
Table 15 - Example Clock and Interface Signal Frequency Relationship 57
Table 16 — MRS Default setting 58
Table 17 — Voltage Ramp Conditions 58
Table 18 — Initialization Timing Parameters 61
Table 19 — Reset Timing Parameter 62
Table 20 — Power Supply Conditions 62
Table 21 — Power Supply Conditions 62
Table 22 - ZQ Calibration Timing Parameters 71
Table 23 - Relation between MR16 OP[3:2] Setting and Physical Register Number 79
Table 24 - Relation between MR16 OP[1:0] Setting and Physical Register Number 79
Table 25 - Mapping of CA Input pin and DQ Output pin 81
Table 26 - Command Bus Training AC Timing Table 87
Table 27 - Mapping of MR12 OP Code and DQ Numbers 95
Table 28 - Mapping of CA Input pin and DQ Output pin 95
Table 29 - Command Bus Training AC Timing Table 103
Table 30 - WCK2CK Leveling Timing Parameters 114
Table 31 — DCA Range 115
Table 32 — Duty Cycle Adjuster Range 115
Table 33 MR26 Register Information (MA[7:0] = $1A_H$) 118
Table 34 MR26 definition 118
Table 35 DCM output example 120
Table 36 Duty cycle monitor timing 120
Table 37 — Invert Mask or output data fix0 Assignments in X16 Mode 122
Table 38 — Invert Mask or output data fix0 Assignments in X8 Mode 122
Table 39 — Read DQ Calibration Bit Ordering, Inversion, output data fix0 example for DQ 123
Table 40 — Read DQ Calibration Bit Ordering, Inversion, output data fix0 example for DMI 124
Table 41 - DMI Output behavior and Read Latencies for Read DQ Cal. command 125
Table 42 - Relationship between MR setting and DMI behavior for RDC command 126
Table 43 - Relationship between MR setting and FIFO behavior 128
Table 44 DMI, RDQS_t/Parity Input behavior for Write FIFO command 129
Table 45 - DMI Output behavior and Read Latencies for Read FIFO command 130
Table 46 - Relationship between MR setting and DMI behavior for RFF and RDC command 131
Table 47 – MR# and Operand which are prohibited to change during RDQS toggle mode 142
Table 48 - MR# and Operand which are prohibited to change during Enhanced RDQS training mode 145
Table 49 - Enhanced RQDS training mode entry and exit timings 148
Table 50 – Relationship among RDQS_t, Input data and data written to cell 149
Table 51 - Read/Write-based RDQS_t training mode entry and exit timings 150
Table 52 - Relationship between MR setting and Read/Write-based WCK-RDQS_t Training 150
Table 53 DMI, RDQS_t/Parity Input behavior for Read/Write-based WCK-RDQS_t Training 151
Table 54 - DMI behavior and Read Latencies for Read/Write-based WCK-RDQS_t Training 151

Table 55 - Table 1. Mode Register Assignment in LPDDR5 SDRAM 157
Table 56 - MR0 Register Information (MA [7:0] = 00_H) 160
Table 57 - MR0 definition 160
Table 58 - MR1 Register Information (MA[5:0] = 01_H) 161
Table 59 - MR1 definition 161
Table 60 - MR2 Register Information (MA [6:0] = 02_H) 163
Table 61 - MR2 Register definition 163
Table 62 - nWR Latency 166
Table 63 — MR3 Register Information (MA[7:0] = 03_H) 167
Table 64 — MR3 Definition 167
Table 65 MR4 Register Information (MA[7:0] = 04_H) 168
Table 66 - MR4 definition 168
Table 67 — MR5 Register Information (MA[7:0] = 05_H) 170
Table 68 — MR5 Definition 170
Table 69 — MR6 Register Information (MA[7:0] = 06_H) 170
Table 70 — MR6 Definition 170
Table 71 — MR7 Register Information (MA[7:0] = 07_H) 170
Table 72 — MR7 Definition 170
Table 73 — MR8 Register Information (MA[7:0] = 08_H) 171
Table 74 — MR8 Definition 171
Table 75 — MR9 Register Information (MA[7:0] = 09_H) 171
Table 76 — MR9 Definition 171
Table 77 — MR10 Register Information (MA [7:0] = $0A_H$) 172
Table 78 — MR10 Definition 172
Table 79 - MR11 Register Information (MA[7:0] = $0B_H$) 173
Table 80 - MR11 Definition 173
Table 81 — MR12 Register Information (MA[5:0] = $0C_H$) 174
Table 82 — MR12 Definition 174
Table 83 — MR12 V_{REF}(CA) Settings 175
Table 84 — MR13 Register Information (MA[5:0] = $0D_H$) 176
Table 85 — MR13 Definition 176
Table 86 — MR14 Register Information (MA[7:0] = $0E_H$) 177
Table 87 — MR14 definition 177
Table 88 — MR14 V_{REF}(DQ[7:0]) Settings 178
Table 89 — MR15 Register Information (MA[7:0] = $0F_H$) 179
Table 90 — MR15 definition 179
Table 91 — MR15 VREF(DQ[15:8]) Settings 180
Table 92 — MR16 Register Information (MA[5:0] = 10_H) 181
Table 93 — MR16 definition 181
Table 94 — MR17 Register Information (MA[5:0] = 11_H) 182
Table 95 — MR17 definition 182
Table 96 — MR18 Register Information (MA[7:0] = 12_H) 183
Table 97 — MR18 Definition 183
Table 98 - MR19 Register Information (MA[7:0] = 13_H) 184
Table 99 - MR19 Definition 184
Table 100 — MR20 Register Information (MA[7:0] = 14_H) 185
Table 101 — MR20 definition 185
Table 102 — MR21 Register Information (MA[7:0] = 15_H) 186
Table 103 — MR21 Definition 186
Table 104 — MR22 Register Information (MA[7:0] = 16_H) 187
Table 105 — MR22 Definition 187
Table 106 — MR23 Register Information (MA[5:0] = 17H) 187
Table 107 — MR23 Definition 187
Table 108 — Row Address of Masked Segment for x16 Mode 187
Table 109 — Row Address of Masked Segment for x8 Mode 187

Table 110 — MR24 Register Information (MA[5:0] = 18H) 188
Table 111 — MR24 Definition 188
Table 112 — MR25 Register Information (MA[7:0] = 19_H) 189
Table 113 — MR25 Definition 189
Table 114 — MR26 Register Information (MA[7:0] = $1A_H$) 190
Table 115 — MR26 definition 190
Table 116 — MR27 Register Information (MA[7:0] = $1B_H$) 191
Table 117 — MR27 Definition 191
Table 118 — MR28 Register Information (MA[7:0] = $1C_H$) 192
Table 119 — MR28 Definition 192
Table 120 — MR29 Register Information (MA[7:0] = 1DH) 193
Table 121 — MR29 Definition 193
Table 122 — MR30 Register Information (MA[5:0] = $1E_H$) 194
Table 123 — MR30 Definition 194
Table 124 — MR31 Register Information (MA[7:0] = $1F_H$) 195
Table 125 — MR31 Definition 195
Table 126 — MR31 Invert Register Pin Mapping 195
Table 127 — MR32 Register Information (MA[7:0] = 20_H) 196
Table 128 — MR32 definition 196
Table 129 — MR32 Invert Register Pin Mapping 196
Table 130 — MR33 Register Information (MA[7:0] = 21_H) 197
Table 131 — MR33 Definition 197
Table 132 — MR34 Register Information (MA[7:0] = 22_H) 197
Table 133 — MR34 Definition 197
Table 134 — MR35 Register Information (MA[7:0] = 23_H) 198
Table 135 — MR35 Definition 198
Table 136 — MR36 Register Information (MA[7:0] = 24_H) 198
Table 137 — MR36 Definition 198
Table 138 — MR37 Register Information (MA[7:0] = 25_H) 199
Table 139 — MR37 Definition 199
Table 140 — MR38 Register Information (MA[7:0] = 26_H) 200
Table 141 — MR38 Definition 200
Table 142 — MR39 Register Information (MA[7:0] = 27_H) 200
Table 143 — MR39 Definition 200
Table 144 — MR40 Register Information (MA[7:0] = 28_H) 201
Table 145 — MR40 Definition 201
Table 146 — MR41 Register Information (MA[7:0] = 29_H) 202
Table 147 — MR42 Register Information (MA[7:0] = $2A_H$) 202
Table 148 — MR42 definition 202
Table 149 - MR43 Register Information (MA[7:0] = $2B_H$) 203
Table 150 – MR43 definition 203
Table 151 - MR44 Register Information (MA[7:0] = $2C_H$) 204
Table 152 - MR44 definition 204
Table 153 - MR45 Register Information (MA[7:0] = $2D_H$) 205
Table 154 – MR45 definition 205
Table 155 - Updating ECC Syndromes and Error Byte Lane 206
Table 156 — MR46 Register Information (MA[5:0] = $2E_H$) 207
Table 157 — MR46 definition 207
Table 158 — MR47 Register Information (MA[7:0] = $2F_H$) 207
Table 159 — MR47 Definition 207
Table 160 — MR48 Register Information (MA[7:0] = 30_H) 207
Table 161 — MR48 Definition 207
Table 162 — MR49 Register Information (MA[7:0] = 31_H) 207
Table 163 — MR49 Definition 207
Table 164 — MR50 Register Information (MA[7:0] = 32_H) 208

Table 165 — MR50 Definition 208
Table 166 — MR51 Register Information (MA[7:0] = 33_H) 208
Table 167 — MR51 Definition 208
Table 168 — MR52 Register Information (MA[7:0] = 34_H) 208
Table 169 — MR52 Definition 208
Table 170 — MR53 Register Information (MA[7:0] = 35_H) 208
Table 171 — MR53 Definition 208
Table 172 — MR54 Register Information (MA[7:0] = 36_H) 208
Table 173 — MR54 Definition 208
Table 174 - MR56 Register Information (MA[7:0] = 38_H) 209
Table 175 - MR56 Definition 209
Table 176 - MR60 Register Information (MA[7:0] = $3C_H$) 209
Table 177 - MR60 Definition 209
Table 178 — Command Truth Table 210
Table 179 — Allowable CAS command operand(s) combination 213
Table 180 — CAS command with WCK2CK Synchronization bits 214
Table 181 — WCK2CK Sync AC Parameters for WRITE operation 216
Table 182 — WCK2CK Sync AC Parameters for Read operation 218
Table 183 — WCK2CK Sync AC Parameters for Read operation 219
Table 184 — WCK2CK Sync AC Parameters for Read operation 219
Table 185 — WCK2CK Sync AC Parameters for CAS(WS_FAST) 221
Table 186 - CAS(WS_OFF) command 236
Table 187 — Precharge Bank Selection 8 Bank mode 241
Table 188 — Precharge Bank Selection 4 Bank / 4 Bank Group mode 242
Table 189 — Precharge Bank Selection 16 Banks mode 242
able 190 — Timing Between Commands (PRECHARGE and Auto-PRECHARGE) : DQ ODT is Disable 249
Table 191 — Core Timing (tRBTP) 255
Table 192 — RDQS Timing Parameters 260
Table 193 — RDQS Pattern Definition in case READ to READ command timing is BL/n + k*nCK (k=1, 2) 261
Table 194 — RDQS Pattern Definition in case READ to READ command timing delay is BL/n + k*nCK (k=1, 2, 3) 262
Table 195 — Read Latencies for Read Link ECC off case (DVFSC disabled) 267
Table 196 — Read Latencies for Read Link ECC off case (DVFSC enabled) 268
Table 197 - Read Latencies for Read Link ECC on case (DVFSC disabled) 268
Table 198 — Write Latency: DVFSC Disabled 269
Table 199 — Write Latency: DVFSC Enabled 269
Table 200 — nWR Latency 271
Table 201 — tCCDMW 273
Table 202 - DMI pin behavior by command and support function setting for Write Related Commands 279
Table 203 - DMI pin behavior by command and support function setting for Read and MRR commands 281
Table 204 - DMI pin behavior by command and support function setting for RFF and RDC Command 283
Table 205 — Bank and Refresh counter increment behavior on the 4Bank/4BG mode or 16Bank mode 285
Table 206 — Bank and Refresh counter increment behavior on the 8bank mode 286
Table 207 — REFRESH Command Scheduling Separation requirements for 4Bank /4BG mode or 16Bank mode 287
Table 208 — REFRESH Command Scheduling Separation requirements for 8Bank mode 288
Table 209 - REFRESH Command Timing Constraints 290
Table 210 - Refresh Requirement Parameters for BG mode or 16Bank mode 292
Table 211 - Refresh Requirement Parameters for 8Bank mode 292

Table 212 - MR25 OP[7] for Optimized Refresh Control 293
Table 213 — Self Refresh AC Timing 299
Table 214 — Self Refresh Exit (SRX) Command Timing Constraints 300
Table 215 - Example of Segment Masking use in LPDDR5 SDRAM 301
Table 216 - Power Down AC Timing 320
Table 217 - Read and Read w/ Precharge to Power Down Entry: NT ODT is Disabled 321
Table 218 - Read and Read w/ Precharge to Power Down Entry: NT ODT is Enabled 321
Table 219 – Special timing to Mode Register Write to Power Down Entry 322
Table 220 - Deep Sleep Mode AC Timing Table 329
Table 221 — DQ Output Mapping for lower byte 330
Table 222 — DQ Output Mapping for upper byte 331
Table 223 — Mode Register Read/Write AC Timing 334
Table 224 — Truth Table for Mode Register Read (MRR) and Mode Register Write (MRW) .. 335
Table 225 - Mode Register Function with three physical registers 337
Table 226 — Relation between MR Setting and DRAM Operation 338
Table 227 — Frequency Set Point AC Timing Table 339
Table 228 — tFC value mapping 339
Table 229 — tFC value mapping example 339
Table 230 — Command/Address Bus ODT State 343
Table 231 — ODT DC Electrical Characteristics, assuming RZQ = 240Ω±1% over the entire operating temperature range after a proper ZQ calibration 344
Table 232 — ODT Command/Address bus AC timing parameter 345
Table 233 — ODTLon and ODTLoff Latency Values 347
Table 234 — Asynchronous ODT Turn On and Turn Off Timing 348
Table 235 — ODT DC Electrical Characteristics, assuming RZQ = 240Ω±1% over the entire operating temperature range after a proper ZQ calibration 349
Table 236 - CS ODT DC Electrical Characteristics, assuming RZQ = 240Ω±1% over the entire operating temperature range after a proper ZQ calibration 352
Table 237 - Table 1. Non-target and Target ODT status depending on DRAM state 353
Table 238 - Normal Mode vs. NT-ODT Mode for Write Operation 354
Table 239 - Table 1. Normal Mode vs. NT-ODT Mode for Read Operation 354
Table 240 - Combination of Target ODT, Non-target ODT and SoC ODT 355
Table 241 - DMI ODT setting example in NT-ODT Mode 356
Table 242 - RDQS_t/c ODT setting example in NT-ODT Mode 357
Table 243 - MR0 OP[0] for NT-ODT timing mode 358
Table 244 - ODTLon and ODTLoff Latency Values for Write 360
Table 245 - Asynchronous NT-ODT Turn On and Turn off Timing for Write 360
Table 246 - ODTLon_RD and ODTLoff_RD Latency Values for Read with RDQS disabled (MR0 OP[0]=0_B) 361
Table 247 - ODTLon_RD and ODTLoff_RD Latency Values for Read with RDQS enabled 362
Table 248 - ODTLon_RD and ODTLoff_RD Latency Values for Read with RDQS enabled & MR10 OP[5:4]=11_B (MR0 OP[0]=0_B) 363
Table 249 - ODTLon_RD_DQ and ODTLoff_RD_DQ Latency Values for Read (MR0 OP[0]=1_B) 364
Table 250 - ODTLon_RD_RDQS and ODTLoff_RD_RDQS Latency Values for Read with RDQS disabled (MR0 OP[0]=1_B) 365
Table 251 - ODTLon_RD_RDQS and ODTLoff_RD_RDQS Latency Values for Read with RDQS enabled & MR10 OP[5:4]=00_B, 01_B, 10_B (MR0 OP[0]=1_B) 366
Table 252 - ODTLon_RD_RDQS and ODTLoff_RD_RDQS Latency Values for Read with RDQS enabled & MR10 OP[5:4]=11_B (MR0 OP[0]=1_B) 367
Table 253 - Asynchronous NT-ODT Turn On and Turn Off Timing 367
Table 254 - Normal Mode vs. NT-ODT Mode for Write Operation 372
Table 255 - Normal Mode vs. NT-ODT Mode for Read Operation 372
Table 256 - Combination of Target ODT, Non-target ODT and SoC ODT 372
Table 257 - NT ODT behavior of DMI by MR setting 373

Table 258 - NT ODT behavior of RDQS_t by MR setting 374
Table 259 - NT ODT behavior of RDQS_c by MR setting 375
Table 260 - ODTLon and ODTLoff Latency Values for Write 378
Table 261 - Asynchronous NT-ODT Turn on and Turn off Timing for Write 378
Table 262 - ODTLon_RD_DQ and ODTLoff_RD_DQ Latency Values for Read (MR0 OP[0]=1_B) 382
Table 263 - ODTLon_RD_RDQS and ODTLoff_RD_RDQS Latency Values for Read with RDQS enabled & MR10 OP[5:4]=00_B, 01_B, 10_B (MR0 OP[0]=1_B) 383
Table 264 - ODTLon_RD_RDQS and ODTLoff_RD_RDQS Latency Values for Read with RDQS enabled & MR10 OP[5:4]=11_B (MR0 OP[0]=1_B) 384
Table 265 - Asynchronous NT-ODT Turn On and Turn Off Timing 384
Table 266 — VRCG Enable / Disable Timing 391
Table 267 - V_{REF}(CA) update timing AC Timing Table 393
Table 268 - V_{REF}(DQ) update timing AC Timing Table 395
Table 269 — Temperature Sensor 397
Table 270 — MPC Command Definition 398
Table 271 — MPC Command Definition for OP[7:0] 398
Table 272 - WCK Oscillator Matching Error Specification for HF mode 403
Table 273 - WCK Oscillator Matching Error Specification for LF mode 404
Table 274 - WCK2DQI/WCK2DQO Interval Oscillator AC Timing 407
Table 275 V_{DDQ} Ramp Rates 414
Table 276 - Reference data S[7:0] bit mapping 416
Table 277 - Write data copy hit or miss operands (DC0 – DC3) of CAS command 417
Table 278 - Read data copy hit or miss flag bits in a DM pin 418
Table 279 - CAS command with write X (zero) enable bits. 420
Table 280 – AC Timing 424
Table 281 - MR29 OP[7:0] Register Information 425
Table 282 - Combination of PPR Resource for CA Input 425
Table 283 - Guard Key Encoding for MR42 426
Table 284 - PPR Timing Parameters 428
TABLE 285 LPDDR5 REFRESH COMMAND WITH RFM 429
TABLE 286 REFRESH MANAGEMENT PARAMETERS 430
TABLE 287 BG MODE AND 16B MODE SB0/1 DEFINITION 432
TABLE 288 BG MODE AND 16B MODE BANK ADDRESS AND SUB-BANK RELATIONSHIP WHEN MR57 OP[5:4]=01B 432
TABLE 289 8B MODE SB0/1 DEFINITION 432
TABLE 290 8B MODE SUB-BANK ADDRESSING TABLE FOR 2 REGION 435
TABLE 291 MR57 DEVICE FEATURE (MA[5:0]=39H) 436
TABLE 292 MR57 DEFINITIONS 436
TABLE 293 MR27 DEVICE FEATURE (MA[5:0]=1BH) 436
TABLE 294 MR27 DEFINITIONS 436
TABLE 295 RFM OPERATION EXAMPLES (ONE BANK, ONE SUB-BANK REGION) 437
TABLE 296 RFM OPERATION EXAMPLES (ONE BANK, VARIOUS SUB-BANK CONFIGURATIONS) 438
Table 297 - ECC Check Matrix for Data 442
Table 298 - ECC Check Matrix for DMI 444
Table 299 - Allowable combination among CK_t/c, WCK_t/c and RDQS_t/c 449
Table 300 - SE from/to Differential FSP and additional period for MRW AC timing 454
Table 301 - Delta CK and DQS Specification 454
Table 302 - CAS Command Operands - WCK SUSPEND 455
Table 303 - Enhanced WCK Always On Mode Timing Parameter 456
Table 304 - WCK to CK/DQ offset Rank to Rank Variation 458
Table 305 - Effective Burst Length (BL/n) Definition 459
Table 306 - Command Timing Constraints for Same Banks in Same Bank Group (DQ ODT is disabled) 461

Table 307 - Command Timing Constraints for Different Banks in Same Bank Group (DQ ODT is disabled) 462
Table 308 - Command Timing Constraints for Different Banks in Different Bank Group (DQ ODT is disabled) 463
Table 309 - Command Timing Constraints for Same Banks in 8B Mode (DQ ODT is disabled) 464
Table 310 - Command Timing Constraints for Different Banks in 8B Mode (DQ ODT is disabled) 465
Table 311 - Command Timing Constraints for Same Banks in 16B Mode (DQ ODT is disabled) 466
Table 312 - Command Timing Constraints for Different Banks in 16B Mode (DQ ODT is disabled) 467
Table 313 - Command Timing Constraints for Same Banks in Same Bank Group (DQ ODT is enabled) 468
Table 314 - Command Timing Constraints for Different Banks in Same Bank Group (DQ ODT is enabled) 468
Table 315 - Command Timing Constraints for Different Banks in Different Bank Group (DQ ODT is enabled) 469
Table 316 - Command Timing Constraints for Same Banks in 8B Mode (DQ ODT is enabled) 469
Table 317- Command Timing Constraints for Different Banks in 8B Mode (DQ ODT is enabled) 470
Table 318 - Command Timing Constraints for Same Banks in 16B Mode (DQ ODT is enabled) 470
Table 319 - Command Timing Constraints for Different Banks in 16B Mode (DQ ODT is enabled) 471
Table 320 - Auto Precharge Command Timing Constraints for Same Banks in Same Bank Group 472
Table 321 - Command Timing Constraints for Different Banks in Same Bank Group (DQ ODT Disabled) 472
Table 322 - Command Timing Constraints for Different Banks in Different Bank Group (DQ ODT Disabled) 473
Table 323 - Command Timing Constraints for Same Banks in 8B Mode 473
Table 324 - Command Timing Constraints for Different Banks in 8B Mode (DQ ODT Disabled) 474
Table 325 - Command Timing Constraints for Same Banks in 16B Mode 474
Table 326 - Command Timing Constraints for Different Banks in 16B Mode (DQ ODT Disabled) 475
Table 327 - Command Timing Constraints for Different Banks in Same Bank Group (DQ ODT Enabled) 475
Table 328 - Command Timing Constraints for Different Banks in Different Bank Group (DQ ODT Enabled) 475
Table 329 - Command Timing Constraints for Different Banks in 8B Mode (DQ ODT Enabled) 476
Table 330 - Command Timing Constraints for Different Banks in 16B Mode (DQ ODT Enabled) 476
Table 331 - Same/Different Banks in Same Bank Group (BG Mode) 478
Table 332 - Different Banks in Different Bank Group (BG Mode) 479
Table 333 - Same/Different Banks in 16B/8B Mode 480
Table 334 - Same/Different Banks in Same Bank Group (BG Mode) 482
Table 335 - Different Banks in Different Bank Group (BG Mode) 483
Table 336 - Same/Different Banks in 16B/8B Mode 484
Table 337 - CAS(WS_FS) Command Timing Constraints 485
Table 338 - CAS(WS_WR) Command Timing Constraints 486
Table 339 - CAS(WS_RD) Command Timing Constraints 487

Table 340 - CAS(WS_OFF) Command Timing Constraints 488
Table 341 - CAS(DC0-3), CAS(WRX) Command Timing Constraints 489
Table 342 - CAS(B3) Command Timing Constraints 490
Table 343 - CAS(WS_FS), CAS(WS_WR), CAS(WS_RD), CAS(WS_OFF) Command Timing Constraints 491
Table 344 - CAS(DC0-3), CAS(WRX) Command Timing Constraints 493
Table 345 - CAS(B3) Command Timing Constraints 495
Table 346 – CAS(WCKSUS) Command Timing Constraints 496
Table 347 - CAS(WCKSUS) Command Timing Constraints 497
Table 348 —Training-Related Timing Constraints 499
Table 349 - MRR/MRW Timing Constraints: DQ ODT and NT-ODT is Disable 500
Table 350 - MRR/MRW Timing Constraints: DQ ODT is Enable and NT-ODT Disable 501
Table 351 - MRR/MRW Timing Constraints: DQ ODT is Enable and NT-ODT Enable 502
Table 352 - MR# and Operand which are affected data output condition and/or timing 503
Table 353 - Command Timing Constraints in case of Different Ranks, "DQ ODT ON and NT-ODT OFF" setting for both ranks, CAS-WS_FS Broadcast ON, Link ECC OFF 504
Table 354 - Command Timing Constraints in case of Different Ranks, "DQ ODT OFF and NT-ODT OFF" setting for both ranks, CAS-WS_FS Broadcast ON, Link ECC OFF 505
Table 355 - Command Timing Constraints in case of Different Ranks, "DQ ODT ON and NT-ODT OFF" or "DQ ODT ON and NT-ODT ON" setting for both ranks, CAS-WS_FS Broadcast OFF, Link ECC OFF or ON 506
Table 356 - Command Timing Constraints in case of Different Ranks, "DQ ODT OFF and NT-ODT OFF" setting for both ranks, CAS-WS_FS Broadcast OFF, Link ECC OFF or ON 507
Table 357 - Command Timing Constraints in case of Different Ranks, "DQ ODT ON and NT-ODT ON" setting for both ranks, CAS-WS_FS Broadcast ON, Link ECC OFF 508
Table 358 — x16 Core Timing for BG mode: DVFSC Disabled & Write Link ECC Disabled 509
Table 359 — x16 Core Timing for 16B mode: DVFSC Disabled & Write Link ECC Disabled 509
Table 360 — x16 Core Timing for 8B mode: DVFSC Disabled & Write Link ECC Disabled 509
Table 361 — Byte Mode Core Timing for BG mode: DVFSC Disabled & Write Link ECC Disabled 510
Table 362 — Byte Mode Core Timing for 16B mode: DVFSC Disabled & Write Link ECC Disabled 510
Table 363 — Byte Mode Core Timing for 8B mode: DVFSC Disabled & Write Link ECC Disabled 510
Table 364 — x16 Core Timing for BG mode: DVFSC Disabled & Write Link ECC Enabled 511
Table 365 — x16 Core Timing for 16B mode: DVFSC Disabled & Write Link ECC Enabled 511
Table 366 — x16 Core Timing for 8B mode: DVFSC Disabled & Write Link ECC Enabled 511
Table 367 — Byte Mode Core Timing for BG mode: DVFSC Disabled & Write Link ECC Enabled 512
Table 368 — Byte Mode Core Timing for 16B mode: DVFSC Disabled & Write Link ECC Enabled 512
Table 369 — Byte Mode Core Timing for 8B mode: DVFSC Disabled & Write Link ECC Enabled 512
Table 370 — x16 Core Timing for 16B mode: DVFSC Enabled & Write Link ECC Disabled 513
Table 371 — x16 Core Timing for 8B mode: DVFSC Enabled & Write Link ECC Disabled 513
Table 372 — Byte Mode Core Timing for 16B mode: DVFSC Enabled & Write Link ECC Disabled 513
Table 373 — Byte Mode Core Timing for 8B mode: DVFSC Enabled & Write Link ECC Disabled 513
Table 374 — Temperature Derating AC Timing 514
Table 375 — Absolute Maximum DC Ratings 515
Table 376 - Recommended Voltage operating conditions 516
Table 377 - Input Leakage Current 520
Table 378 — Input/Output Leakage Current 520
Table 379 — Operating Temperature Range 521

Table 380 — Operating Temperature Range 522
Table 381 — Electrostatic Discharge Sensitivity Characteristics 522
Table 382 — Reset input level specification 523
Table 383 — LPDDR5 Input Level for CS 523
Table 384 — AC Overshoot / Undershoot 523
Table 385 — LPDDR5 AC Overshoot / Undershoot for LVSTL 523
Table 386 — CK Differential Input Voltage 525
Table 387 — Clock Single-Ended Input Voltage 526
Table 388 — Differential Input Slew Rate Definition for CK_t, CK_c 527
Table 389 — Differential Input Level for CK_t, CK_c 527
Table 390 — Differential Input Slew Rate for CK_t, CK_c 527
Table 391 — Cross point voltage for differential input signals (Clock) 528
Table 392 — WCK differential input voltage 529
Table 393 — WCK Single-Ended Input Voltage 531
Table 394 — Differential Input Slew Rate Definition for WCK_t, WCK_c 532
Table 395 — Differential Input Level for WCK_t, WCK_c 532
Table 396 — Differential Input Slew Rate for WCK_t, WCK_c 532
Table 397 — Cross point voltage for differential input signals (WCK) 533
Table 398 - Output Slew Rate (single-ended) 534
Table 399 - Differential Output Slew Rat 535
Table 400 — Single Ended WCK parameters 538
Table 401 — Single Ended CK parameters 539
Table 402 — Reference Voltage for tLZ(RDQS), tHZ(RDQS) Timing Measurements 541
Table 403 — Reference Voltage for tLZ(DQ), tHZ(DQ) Timing Measurements 543
Table 404 — Read AC Timing 544
Table 405 - Input / Output Capacitance 545
Table 406 — Definition of Switching for CA Input Signals 547
Table 407 — CA Pattern for IDD4R @ BG mode 547
Table 408 — CA Pattern for IDD4R @ 16B mode 548
Table 409 — CA Pattern for IDD4R @ 8B mode 548
Table 410 — CA Pattern for IDD4W@ BG mode 549
Table 411 — CA Pattern for IDD4W @ 16B mode 549
Table 412 — CA Pattern for IDD4W@ 8B mode 550
Table 413 — Data Pattern for IDD4R @ DBI Off 551
Table 414 — Data Pattern for IDD4W @ DBI Off 553
Table 415 — Data Pattern for IDD4R @ DBI On 554
Table 416 — Data Pattern for IDD4W @ DBI On 556
Table 417 — LPDDR5 IDD Specification Parameters and Operating Conditions 557
Table 418 — Clock AC Timings for 5/10/67/133MHz 562
Table 419 — Clock AC Timings for 200/267/344/400MHz 563
Table 420 — Clock AC Timings for 467/533/600/688 563
Table 421 — Clock AC Timings for 750/800MHz 563
Table 422 — Write Clock AC Timings for 266/533/800/1067MHz 566
Table 423 — Write Clock AC Timings for 1375/1600/1867/2134MHz 567
Table 424 — Write Clock AC Timings for 2400/2750/3000/3200MHz 567
Table 425 - tWCK2DQ AC parameters 568
Table 426 - WCK to CK/DQ offset rank to rank variation 568
Table 427 - DRAM DQ, DQS output timing 573
Table 428 CS Rx Specification 576
Table 429 CA Rx Specification 579
Table 430 - DQ, DMI, Parity and DBI Rx Specification 584
Table 431 — Pull-down Driver Characteristics, with ZQ Calibration 585
Table 432 — Pull-Up Characteristics, with ZQ Calibration 585
Table 433 — Valid Calibration Points 585
Table 434 — Un-terminated Pull Up Characteristics 585

Table 435 Worst Case Output Driver and Termination Resistance 586
Table 436 Worst Case Output high voltage 586
Table 437 Output Driver and Termination Resistance Temperature and Voltage Sensitivity .. 587
Table 438 — LPDDR5 Pad order 589
Table 439 – Package configuration example 590

Revision History

Version	Description	Date	Remark
0.1	· Initial version release based on JESD209-5A	Mar 2020	Preliminary
0.2	· Editorial update items and Committee ballots that have reached consensus in JC42.6 have been reflected	Jun 2020	Preliminary
1.0	· Final Version	Jan 2021	
1.1	· IDD data updated	Feb 2021	

Ordering Information

Part Number	Mode	Operation Voltage	Density	Speed	Package	Operating Temperature
H58G66MK6VX026	LPDDR5	1.8V/1.05V/0.5V	64Gb (x16, 4 Channel)	DDR5 6400	441 Ball FBGA (Lead & Halogen Free)	-40°C ~ 95°C
H58G66MK6QX026	LPDDR5	1.8V/1.05V/0.5V	64Gb (x16, 4 Channel)	DDR5 6400	441 Ball FBGA (Lead & Halogen Free)	-40°C ~ 105°C
H58G66MK6PX026	LPDDR5	1.8V/1.05V/0.5V	64Gb (x16, 4 Channel)	DDR5 6400	441 Ball FBGA (Lead & Halogen Free)	-40°C ~ 125°C

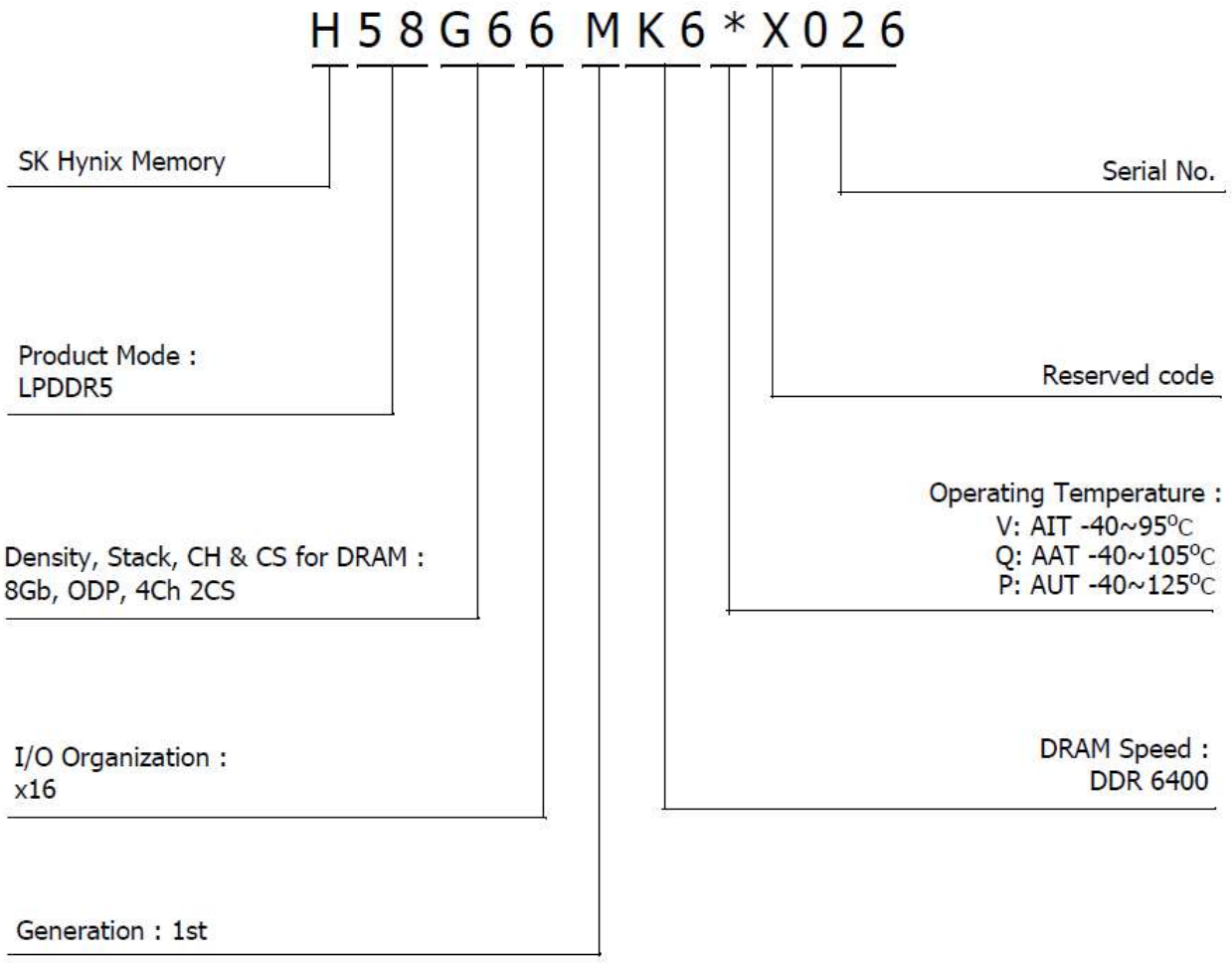

Functional Block Diagram

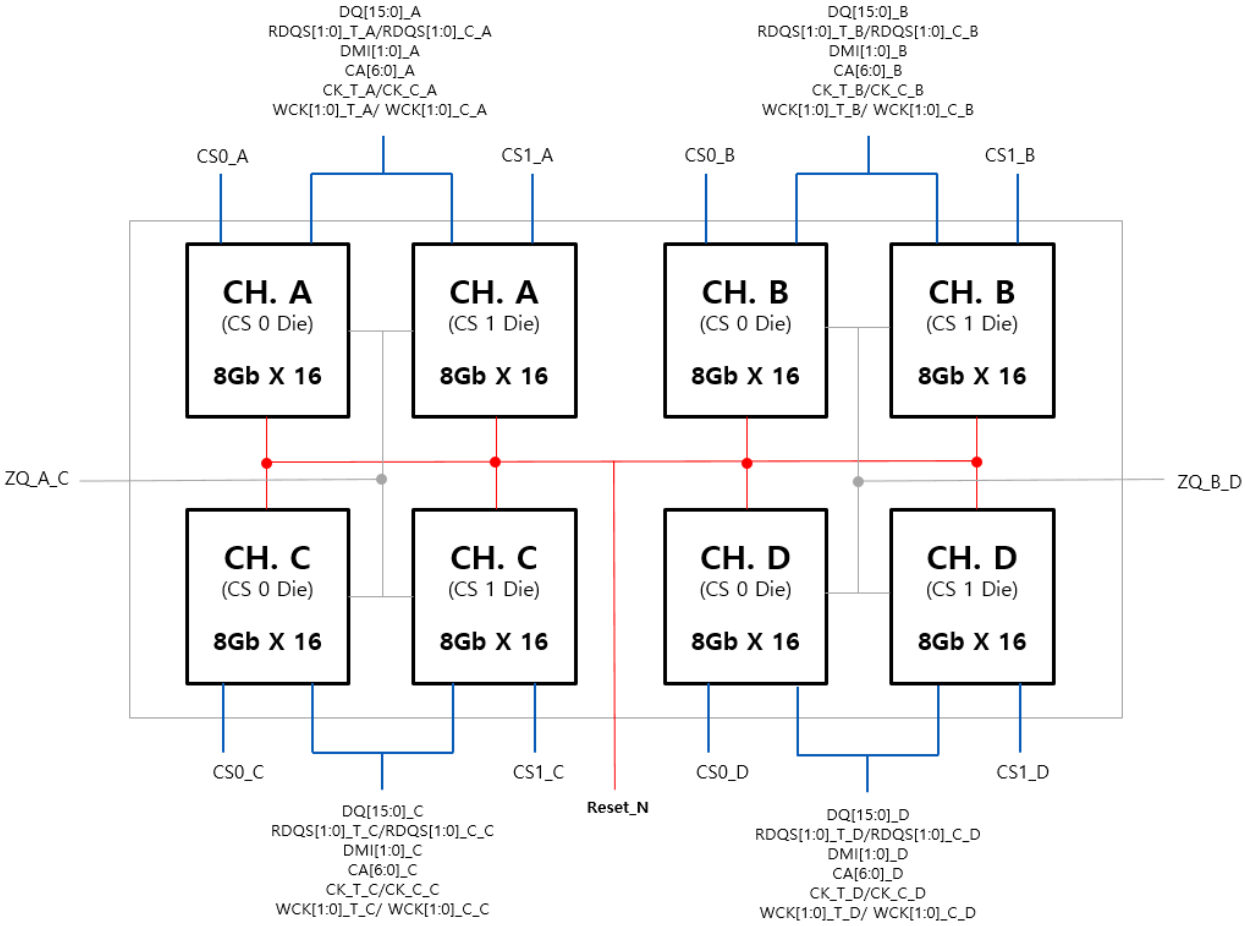

Package Informaiton – 441ball 4CH x64 Discrete Package, 0.65 mm x 0.65 mm using MO-TBD

LPDDR5 441ball x64 discrete package, 0.65 mm x 0.65 mm using MO-TBD

	1	2	3	4	5	6	7	8	9	10	11	12	13	14	15	16	17	18	19	20	21
A	VSS	VSS	VDD1	VDD2L	VSS	VDD2H	VDD1	VSS	VDD2L	VDD2H	VDD2H	VSS	VDD1	VDD2L	VSS	VDD2H	VDD1	VSS	VDD2L	VSS	VSS
B	VSS	DQ0_A	VSS	DQ3_A	VDD2H	VSS	DQ11_A	DQ9_A	DQ8_A	VSS	VDD2H	DQ0_C	VSS	DQ3_C	VDD2H	VSS	DQ11_C	DQ9_C	DQ8_C	RFU	VSS
C	VDD2H	VSS	DQ2_A	VDDQ	CA0_A	VDD2H	VSS	DQ10_A	VDDQ	VDD2H	VSS	VSS	DQ2_C	VDDQ	CA0_C	VDD2H	VSS	DQ10_C	VDDQ	VDD2H	VDD2H
D	VSS	DQ1_A	WCK0_C_A	VSS	CA1_A	CS0_A	VDDQ	VSS	WCK1_T_A	VDD2H	VDDQ	DQ1_C	WCK0_C_C	VSS	CA1_C	CS0_C	VDDQ	VSS	WCK1_T_C	VDDQ	VSS
E	VDDQ	RDQS0_C_A	VSS	WCK0_T_A	VSS	CS1_A	VSS	WCK1_C_A	DMI1_A	VSS	VDDQ	RDQS0_C_C	VSS	WCK0_T_C	VSS	CS1_C	VSS	WCK1_C_C	DMI1_C	VSS	VDD2H
F	VDDQ	RDQS0_T_A	VSS	VDDQ	VSS	CA2_A	VSS	RDQS1_T_A	VSS	VDDQ	VSS	RDQS0_T_C	VSS	VDDQ	VSS	CA2_C	VSS	RDQS1_T_C	VSS	VDDQ	VDD2H
G	VSS	DQ4_A	VDDQ	DMI0_A	RFU0_A	RFU1_A	CA6_A	VSS	RDQS1_C_A	VSS	VDDQ	DMI0_C	VDDQ	DQ4_C	RFU0_C	RFU1_C	CA6_C	VSS	RDQS1_C_C	VSS	VSS
H	VDD2L	VSS	DQ5_A	VSS	CK_T_A	VSS	CA5_A	VDDQ	VSS	DQ12_A	VSS	VSS	DQ5_C	VSS	CK_T_C	VSS	CA5_C	VDDQ	VSS	DQ12_C	VDD2L
J	VDD2H	DQ6_A	DQ7_A	VDD2H	VSS	CK_C_A	VSS	DQ14_A	DQ13_A	VSS	VDD2L	DQ6_C	DQ7_C	VDD2L	ZQ_A_C	CK_C_C	VSS	DQ14_C	DQ13_C	VSS	VDD2H
K	VSS	VDD2H	VDD2H	VDD2H	VSS	CA3_A	CA4_A	VDD2L	VSS	DQ15_A	VDD2H	VDD2H	VDD2H	VDD2H	VSS	CA3_C	CA4_C	VDD2H	VSS	DQ15_C	VSS
L	VDD2H	VDD2L	VDD2L	VDD2H	VDD2L	VDD2H	VSS	VDD2H	VDD2H	VSS	VSS	VSS	VDD2H	VDD2H	VSS	VDD2H	VDD2L	VDD2H	VDD2L	VDD2L	VDD2H
M	VSS	DQ15_B	VSS	VDD2H	CA4_B	CA3_B	VSS	VDD2H	VDD2H	VDD2H	VDD2H	DQ15_D	VSS	VDD2L	CA4_D	CA3_D	VSS	VDD2H	VDD2H	VDD2H	VSS
N	VDD2H	VSS	DQ13_B	DQ14_B	VSS	CK_C_B	ZQ_B_D	VDD2L	DQ7_B	DQ6_B	VDD2L	VSS	DQ13_D	DQ14_D	VSS	CK_C_D	VSS	VDD2H	DQ7_D	DQ6_D	VDD2H
P	VDD2L	DQ12_B	VSS	VDDQ	CA5_B	VSS	CK_T_B	VSS	DQ5_B	VSS	VSS	DQ12_D	VSS	VDDQ	CA5_D	VSS	CK_T_D	VSS	DQ5_D	VSS	VDD2L
R	VSS	VSS	RDQS1_C_B	VSS	CA6_B	RFU1_B	RFU0_B	DQ4_B	VDDQ	DMI0_B	VDDQ	VSS	RDQS1_C_D	VSS	CA6_D	RFU1_D	RFU0_D	DMI0_D	VDDQ	DQ4_D	VSS
T	VDD2H	VDDQ	VSS	RDQS1_T_B	VSS	CA2_B	VSS	VDDQ	VSS	RDQS0_T_B	VSS	VDDQ	VSS	RDQS1_T_D	VSS	CA2_D	VSS	VDDQ	VSS	RDQS0_T_D	VDDQ
U	VDD2H	VSS	DMI1_B	WCK1_C_B	VSS	CS1_B	VSS	WCK0_T_B	VSS	RDQS0_C_B	VDDQ	VSS	DMI1_D	WCK1_C_D	VSS	CS1_D	VSS	WCK0_T_D	VSS	RDQS0_C_D	VDDQ
V	VSS	VDDQ	WCK1_T_B	VSS	VDDQ	CS0_B	CA1_B	VSS	WCK0_C_B	DQ1_B	VDDQ	VDD2H	WCK1_T_D	VSS	VDDQ	CS0_D	CA1_D	VSS	WCK0_C_D	DQ1_D	VSS
W	VDD2H	VDD2H	VDDQ	DQ10_B	VSS	VDD2H	CA0_B	VDDQ	DQ2_B	VSS	VSS	VDD2H	VDDQ	DQ10_D	VSS	VDD2H	CA0_D	VDDQ	DQ2_D	VSS	VDD2H
Y	VSS	RESET_N	DQ8_B	DQ9_B	DQ11_B	VSS	VDD2H	DQ3_B	VSS	DQ0_B	VDD2H	VSS	DQ8_D	DQ9_D	DQ11_D	VSS	VDD2H	DQ3_D	VSS	DQ0_D	VSS
AA	VSS	VSS	VDD2L	VSS	VDD1	VDD2H	VSS	VDD2L	VDD1	VSS	VDD2H	VDD2H	VDD2L	VSS	VDD1	VDD2H	VSS	VDD2L	VDD1	VSS	VSS

NOTE 1 14 mm x14 mm body size
NOTE 2 441 ball count, 0.65 mm pitch, 21 x 21 ball matrix
NOTE 3 Top view; A1 is in top left corner
NOTE 4 ZQ_A_C ball supports Channel A and Channel C die. ZQ_B_D ball supports Channel B and Channel D die.
NOTE 5 ZQ Master Die for ZQ_A_C ball shall be assigned to Rank 0 of Channel A die. If this rank is composed of byte-mode die, the lower byte die shall be the master die.
NOTE 6 ZQ Master Die for ZQ_B_D ball shall be assigned to Rank 0 of Channel D die. If this rank is composed of byte-mode die, the lower byte die shall be the master die.
NOTE 7 This package shall not be used double-sided unless solder joint reliability satisfies application requirements.

Package Informaiton – Mechanical Specification

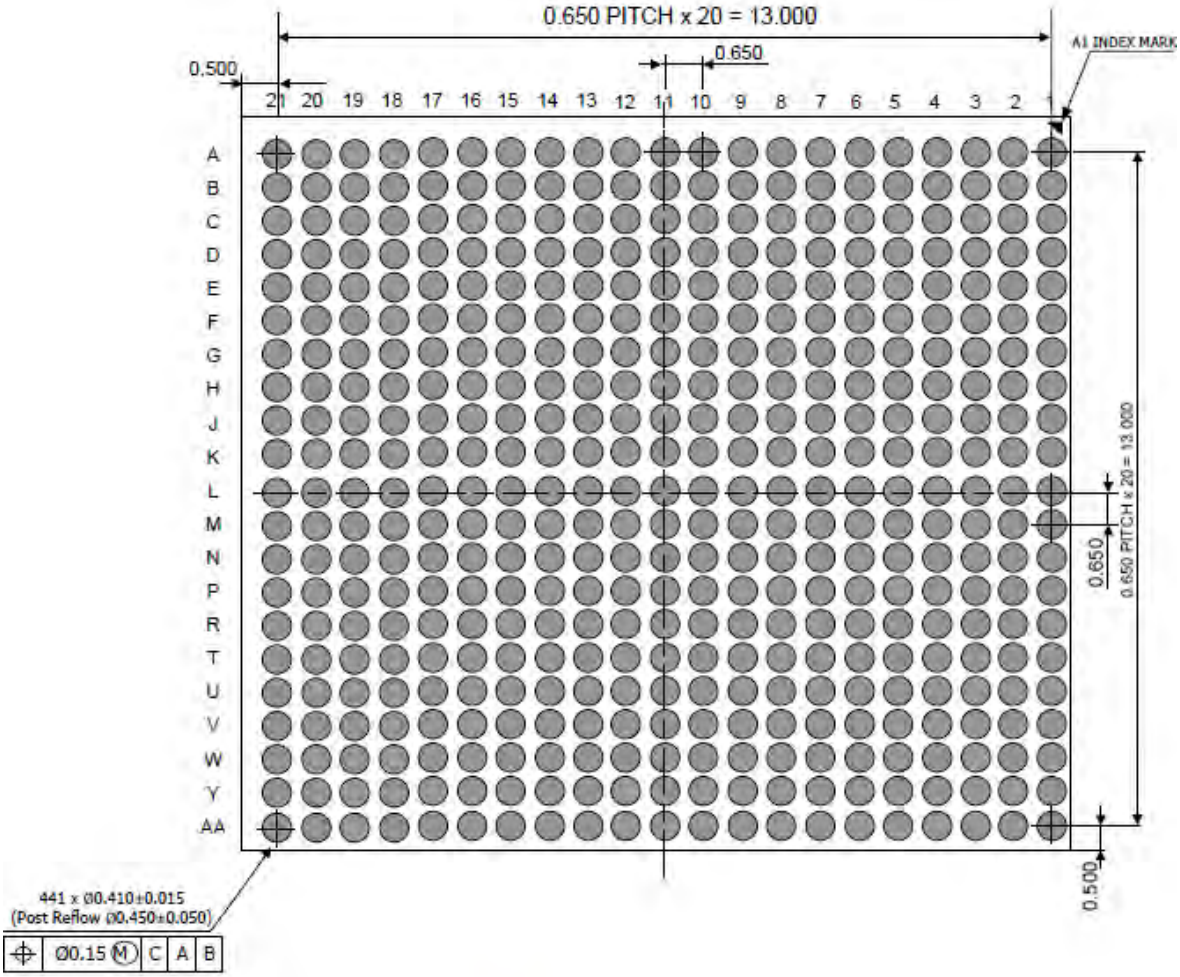

Bottom View

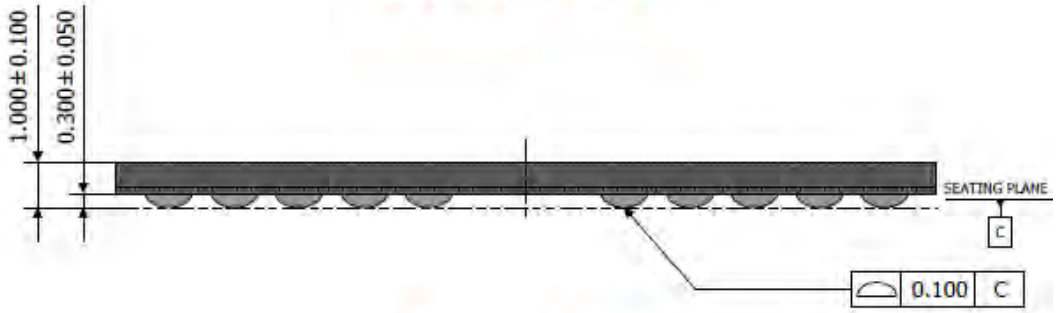

Front View

1 Scope

This document defines the LPDDR5 standard, including features, functionalities, AC and DC characteristics, packages, and ball/signal assignments. The purpose of this specification is to define the minimum set of requirements for a JEDEC compliant x16 one channel SDRAM device and x8 one channel SDRAM device. LPDDR5 device density ranges from 2 Gb through 32 Gb. This document was created using aspects of the following standards: DDR2 (JESD79-2), DDR3 (JESD79-3), DDR4 (JESD79-4), LPDDR (JESD209), LPDDR2 (JESD209-2), LPDDR3 (JESD209-3) and LPDDR4 (JESD209-4).

Each aspect of the standard was considered and approved by committee ballot(s). The accumulation of these ballots was then incorporated to prepare the LPDDR5 standard.

2 Overview

2.1 Features

TBD

2.2 Functional Description

LPDDR5 SDRAM is a high-speed synchronous SDRAM device internally configured with 1 channel containing either 16 or 8 DQ signals. The bank architecture is user-selectable, and can be either eight banks (8B Mode), four banks with four bank groups (BG Mode), or sixteen banks (16B Mode). See the bank architecture section for more information.

Density can range from 2Gb to 32Gb. These LPDDR5 SDRAM devices contain the following number of bits:

- 2Gb has 2,147,483,648 bits
- 3Gb has 3,221,225,472 bits
- 4Gb has 4,294,967,296 bits
- 6Gb has 6,442,450,944 bits
- 8Gb has 8,589,934,592 bits
- 12Gb has 12,884,901,888 bits
- 16Gb has 17,179,869,184 bits
- 24Gb has 25,769,803,776 bits
- 32Gb has 34,359,738,368 bits

LPDDR5 SDRAM devices use a command clock (CK) that operates at a reduced rate from per-byte data clock (WCK). There are seven (DDR) command/address (CA) pins that the memory controller uses to transmit command, address, bank, configuration, and training information to the SDRAM. CA signals are latched on both the rising and falling CK edges when indicated by a high signal on the single (SDR) CS pin. Most commands are 1 nCK in duration. See the command truth table for details.

The WCK:CK ratio is user-selectable as either 2:1 or 4:1. For low-power operation the WCK is generally designed to operate only when read or write data needs to be transmitted on the bus. Due to the high speeds required for WCK, the LPDDR5 SDRAM generally implements circuitry to divide the WCK frequency immediately after the WCK receiver. This leads to a requirement to synchronize WCK to CK when the WCK needs to be re-started from an idle time. See the WCK2CK Sync section for details.

The double-data-rate I/O signaling in high-speed modes is designed to operate with on-die termination on both the memory controller and the LPDDR5 SDRAM. The high-speed I/O was designed to operate with a VDDQ of 0.5V nominal. Signals from the memory controller to the SDRAM were designed assuming a Voh of 0.5*VDDQ, or 250mV. Signals from the SDRAM to the memory controller are calibrated to 0.5*VDDQ, or 250mV nominal. In low-speed modes the signaling may operate unterminated with nominal VDDQ in a range from 0.3V – 0.5V both to and from the SDRAM, with some limitations.

Data access size depends on the bank configuration, with 16n and 32n prefetches supported. A single BL16 Read or Write access for a x16, BG mode LPDDR5 SDRAM, typically consists of a

single 256-bit-wide data transfer at the internal SDRAM core, and sixteen corresponding 16-bit wide, one half-WCK-clock-cycle data transfers at the I/O pins.

Read and Write accesses to LPDDR5 SDRAMs are burst oriented; accesses start at a selected location and continue for a programmed number of locations in a programmed sequence. Accesses begin with the registration of an Activate command. Prior to issuing a Read, Write or Mask Write command, WCK must be synchronized to CK by issuing a CAS command with (WS_RD, WS_WR or WS_FS) followed by a Read, Write or Mask Write command.

The address and BA bits registered coincident with the Activate command are used to select the row and the bank to be accessed. The address bits registered coincident with the Read, Write or Mask Write command are used to select the bank and the starting column location for the burst access.

Prior to normal operation, the LPDDR5 SDRAM is required to be initialized. The Power-Up, Initialization, and Power-off Procedure section provides detailed information covering device initialization.

2.2.1 Pad Definition and Description

Table 1 — Pad Definition and Description

Symbol	Type	Description	Note
CK_t, CK_c	Input	**Clock:** CK_t and CK_c are differential clock inputs. All Double Data Rate (DDR) Command/Address inputs are sampled on both crossing points of CK_t and CK_c. The first crossing point is the rising(falling) edge of CK_t (CK_c) and second crossing point is falling(rising) edge of CK_t (CK_c). Single Data Rate (SDR) inputs, CS is sampled on the crossing point that is the rising(falling) edge of CK_t (CK_c).	
CS	Input	**Chip Select:** CS is part of the command code, and is sampled on the rising(falling) edge of CK_t (CK_c) unless the device is in power-down or Deep Sleep mode where it becomes an asynchronous signal.	
CA[6:0]	Input	**Command/Address Inputs:** CA signals provide the Command and Address input according to the Command Truth Table	
DQ[15:0]	I/O	**Data Input/Output:** Bi-direction data bus.	
WCK[1:0]_t WCK[1:0]_c	Input	**Data Clocks:** WCK_t and WCK_c are differential clocks used for WRITE data capture and READ data output.	
RDQS [1:0]_t , RDQS[1:0]_c	RDQS_t :I/O, RDQS_c :Output	**Read Data Strobe:** RDQS_t and RDQS_c are the differential output clock signals used to strobe data during a READ operation. And RDQS_t is also used as a Parity pin at Write with Link Protection enabled.	1
DMI[1:0]	I/O	**Data Mask Inversion:** DMI achieves multiple function such as Data Mask (DM), Data Bus Inversion (DBI), and Parity at read with ECC operation by setting the Mode Register and DMI is a bi-directional signal and each byte of data has a DMI signal.	1
ZQ	Reference	**ZQ:** ZQ is used to calibrate the output drive strength and the termination resistance as calibration reference. There is one ZQ pad per die. The ZQ pin shall be connected to VDDQ through a 240Ω ±1% resistor.	
VDDQ, V_{DD1}, V_{DD2H}, V_{DD2L}	Supply	**Power Supplies:** Isolated on the die for improved noise immunity.	
V_{SS}	GND	**Ground Reference:** Power supply ground reference	
RESET_n	Input	**RESET:** When asserted LOW, the RESET_n signal resets the die. Reset_n is an asynchronous signal.	
NOTE 1 See Table 2 and Table 3, Per-Byte Signal List/Description, for multi-function definition for these pins.			

2.2.2 Pin per byte

Table 2 — Pins Per-Byte Signal List/Description for Link Protection disabled

Pin Name	DBI Enable	SE RDQS		SE RDQS		Diff RDQS	
		Link Protection disabled					
		(MR20 OP[1:0]=01		(MR20 OP[1:0]=11		(MR20 OP[1:0]=10	
		Write	Read	Write	Read	Write	Read
#11 DMI	No	DM	N/A	DM	N/A	DM	N/A
	Yes	DMI	DBI	DMI	DBI	DMI	DBI
#12 RDQS_t	No	N/A	RDQS_t	N/A	N/A	N/A	RDQS_t
	Yes	N/A	RDQS_t	N/A	N/A	N/A	RDQS_t
#13 RDQS_c	No	N/A	N/A	N/A	RDQS_c	N/A	RDQS_c
	Yes	N/A	N/A	N/A	RDQS_c	N/A	RDQS_c

Table 3 — Pins Per-Byte Signal List/Description for Link Protection enabled

Pin Name	DBI Enable	SE RDQS		SE RDQS		Diff RDQS	
		Link Protection enabled					
		(MR20 OP[1:0]=01		(MR20 OP[1:0]=11		(MR20 OP[1:0]=10	
		Write	Read	Write	Read	Write	Read
#11 DMI	No	DM	parity	DM	parity	DM	parity
	Yes	DMI	parity	DMI	parity	DMI	parity
#12 RDQS_t	No	parity	RDQS_t	parity	N/A	parity	RDQS_t
	Yes	parity	RDQS_t	parity	N/A	parity	RDQS_t
#13 RDQS_c	No	N/A	N/A	N/A	RDQS_c	N/A	RDQS_c
	Yes	N/A	N/A	N/A	RDQS_c	N/A	RDQS_c

2.2.3 LPDDR5 Bank Architecture

LPDDR5 SDRAM supports three bank architectures to provide optimal access methods for varied system configurations. The native burst length determined by data prefetch size depends on which bank architecture is enabled.

Each architecture name is abbreviated as follows:
- BG Mode = 4 banks, 4 bank groups.
- 8B Mode = 8 banks, no bank groups.
- 16B Mode = 16 banks, no bank groups.

The supported operation data rate for each Bank/Bank Group Organization is as follows:
- BG Mode for more than 3200 Mbps (>3200 Mbps).
- 8B Mode for all data rate range.
- 16B Mode for equal or less than 3200 Mbps (≤3200 Mbps).

The bank architecture is selected by MR3 OP[4:3]. This mode register is replicated for each frequency set point.

The BG and 16B modes support burst lengths of 16 or 32, while 8B mode supports only burst length 32.

2.2.3.1 Block diagram of bank configuration and Read operation outline

Here are the block diagrams of each architecture.

2.2.3.1.1 4Banks / 4Bank Groups Configuration

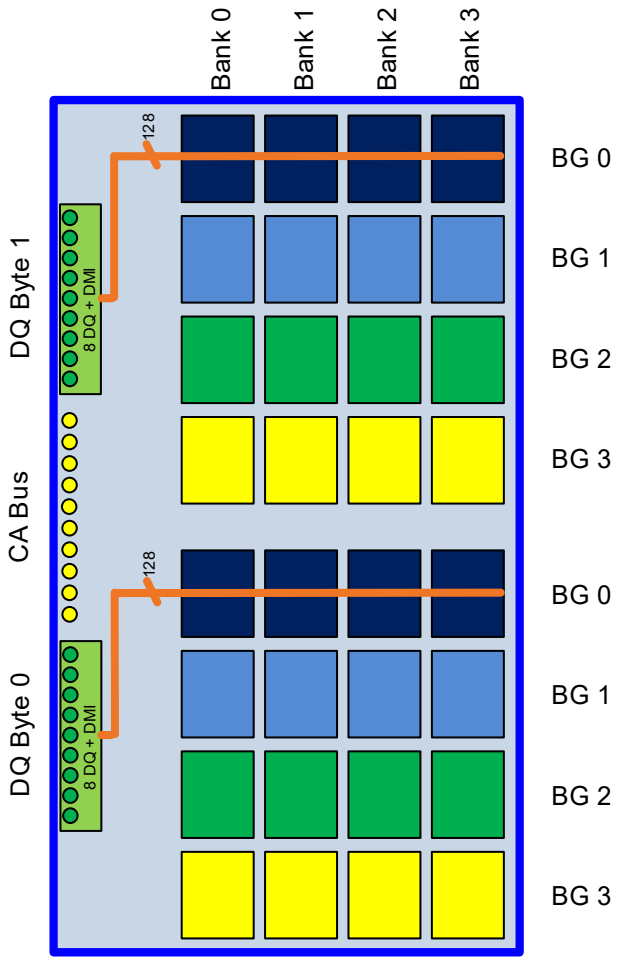

Figure 1 — BG Mode Configuration Example (One Channel Shown)

2.2.3.1.2 8Banks Mode Configuration

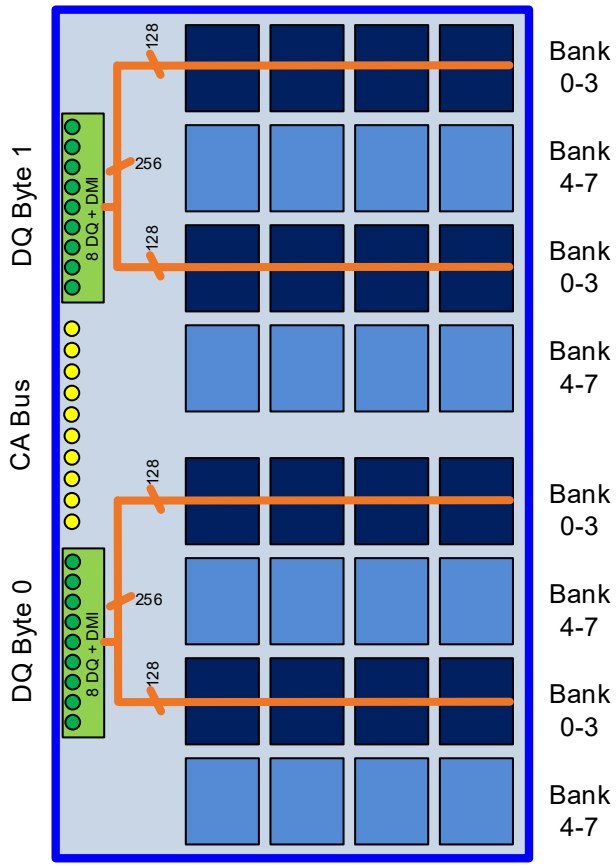

Figure 2 — 8B Mode Configuration Example (One Channel Shown)

2.2.3.1.3 16Banks Mode Configuration

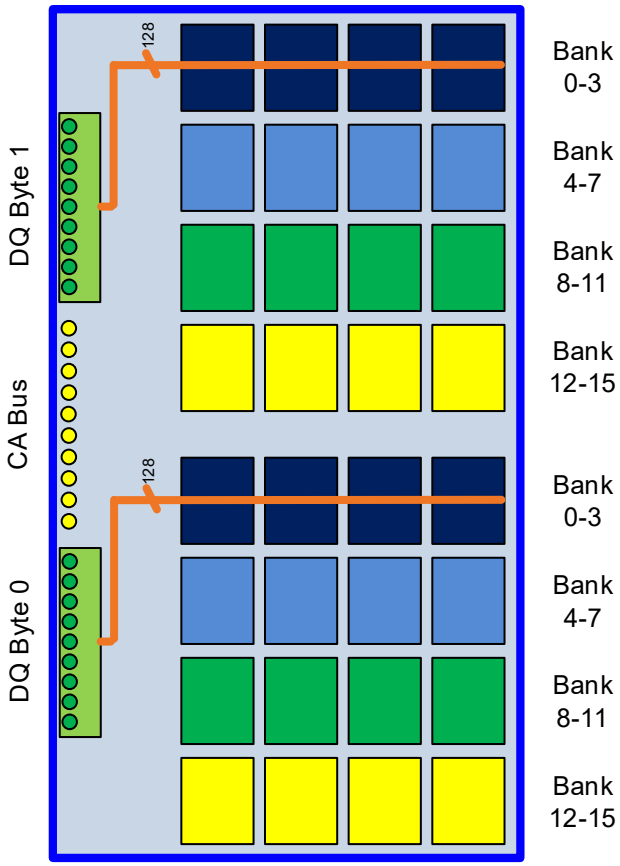

Figure 3— 16B Mode Configuration Example (One Channel Shown)

2.2.3.2 Address Translation Table

The SDRAM Address translation table in these three modes is shown below. Refer to the command truth table for detail.

Table 4 - Address Translation Table

Bank Architecture Mode	CA0	CA1	CA2	CA3
BG	BA0	BA1	BG0	BG1
8B	BA0	BA1	BA2	B4 / V
16B	BA0	BA1	BA2	BA3

NOTE 1 BA0-3: Bank Address, BG0-1: Bank Group address, B4: Burst Starting Address
NOTE 2 In 8B mode, CA3 is B4 for READ and is V for ACT-1, PRE, MWR and WR.
NOTE 3 Bank address (BA) and Bank Group address (BG) in column CA0 to CA2 are physically identical. However, BA3, BG1 and Burst Starting Address(B4) in column CA3 are not physically identical, since the page size is different between BG/16B mode and 8B mode.

2.2.3.3 Bank architecture transition

The three bank modes can be selected by Mode Register change.

The default Bank architecture is 16B mode. If another mode would like to choose, need to change BK/BG ORG:MR3 OP[4:3] during Power-up, Initialization sequence.

16 mode and BG mode which are the same page size can be switched with an FSP procedure. On the other hand, it is necessary to do Reset to switch between 16B/BG mode and 8B mode of different page sizes.

The above-mentioned bank mode change procedure between 16B and BG mode by FSP can be executed during an Idle.

2.2.3.4 Burst Operation

The Read/Write command behavior depends on the bank architecture. Read behavior is described in the following figures for example. These figures focus on Read data output behavior. Therefore, the other part, for example CAS command, WCK input is omitted. Refer to 7.4, Read and Write Operation, for details.

2.2.3.4 Burst Operation (Cont'd)

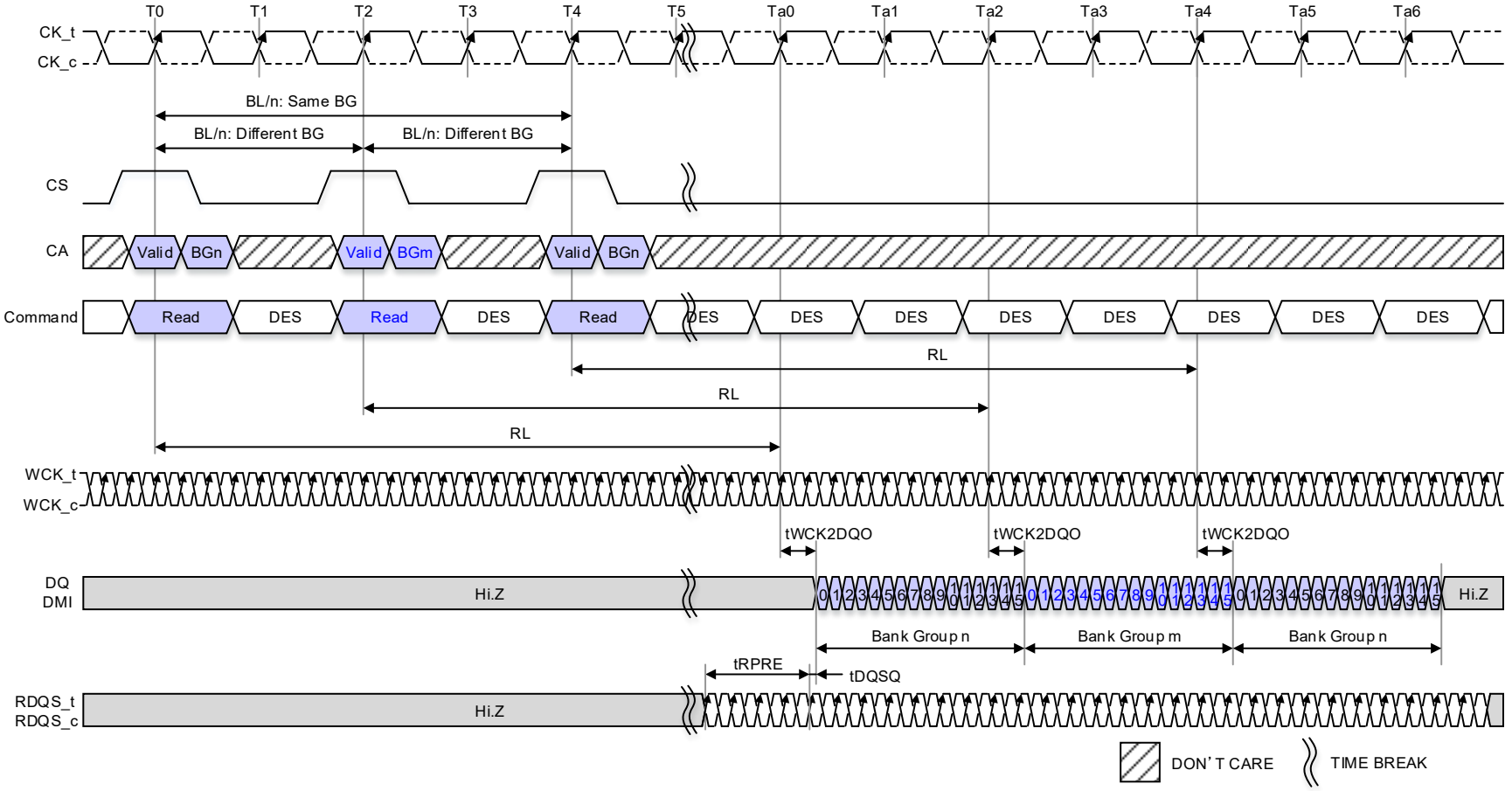

NOTE 1 MR3 OP[4:3]=00_B: BG Mode, MR18 OP[7]=0_B: CKR (WCK vs. CK)= 4:1.
NOTE 2 tWCK2CK is 0ps in this instance.
NOTE 3 DES commands are shown for ease of illustration; other commands may be valid at these times.

Figure 4 — Read Operation BG mode, CKR (WCK vs. CK) = 4:1, BL=16

2.2.3.4 Burst Operation (Cont'd)

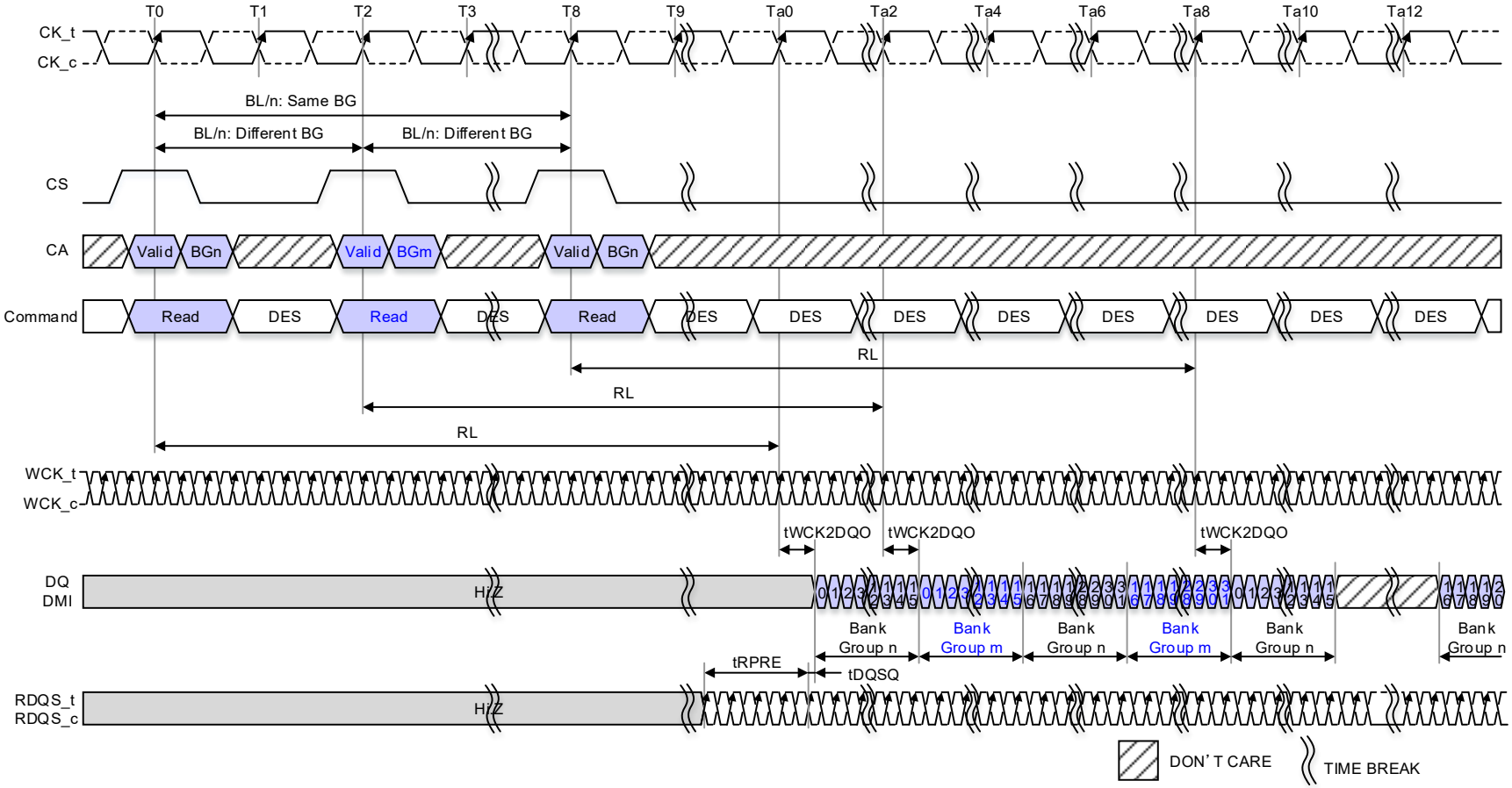

NOTE 1 MR3 OP[4:3]=00_B: BG mode, MR18 OP[7]=0_B: CKR (WCK vs. CK)= 4:1.
NOTE 2 tWCK2CK is 0ps in this instance.
NOTE 3 DES commands are shown for ease of illustration; other commands may be valid at these times.

Figure 5 — Read Operation BG mode, CKR (WCK vs. CK) = 4:1, BL=32

The BG Mode architecture only supports BL32 in an interleaved fashion when the WCK and CK ratio is 4:1. BL32 interleaved Reads will output the first word of DQ[15:0] after certain latency from the Read command. The second word consisting of DQ[31:16] will begin to be driven after an 8tWCK gap from the end of the first word. Figure **5** depicts BG mode Read operations for BL32 including the interleaving between bank groups. If correctly implemented, Read(BL16) command and Read32(BL32) commands can be mixed, however once a Read32(BL32) command is issued, issuing Read(BL16)/Read32(BL32) command after 3 clocks is prohibited, to avoid read data conflict.

The relationship between preceding Write32(BL32) and Write(BL16)/Write32(BL32) is the same as preceding Read32(BL32) and Read(BL16)/Read32(BL32).

2.2.3.4 Burst Operation (Cont'd)

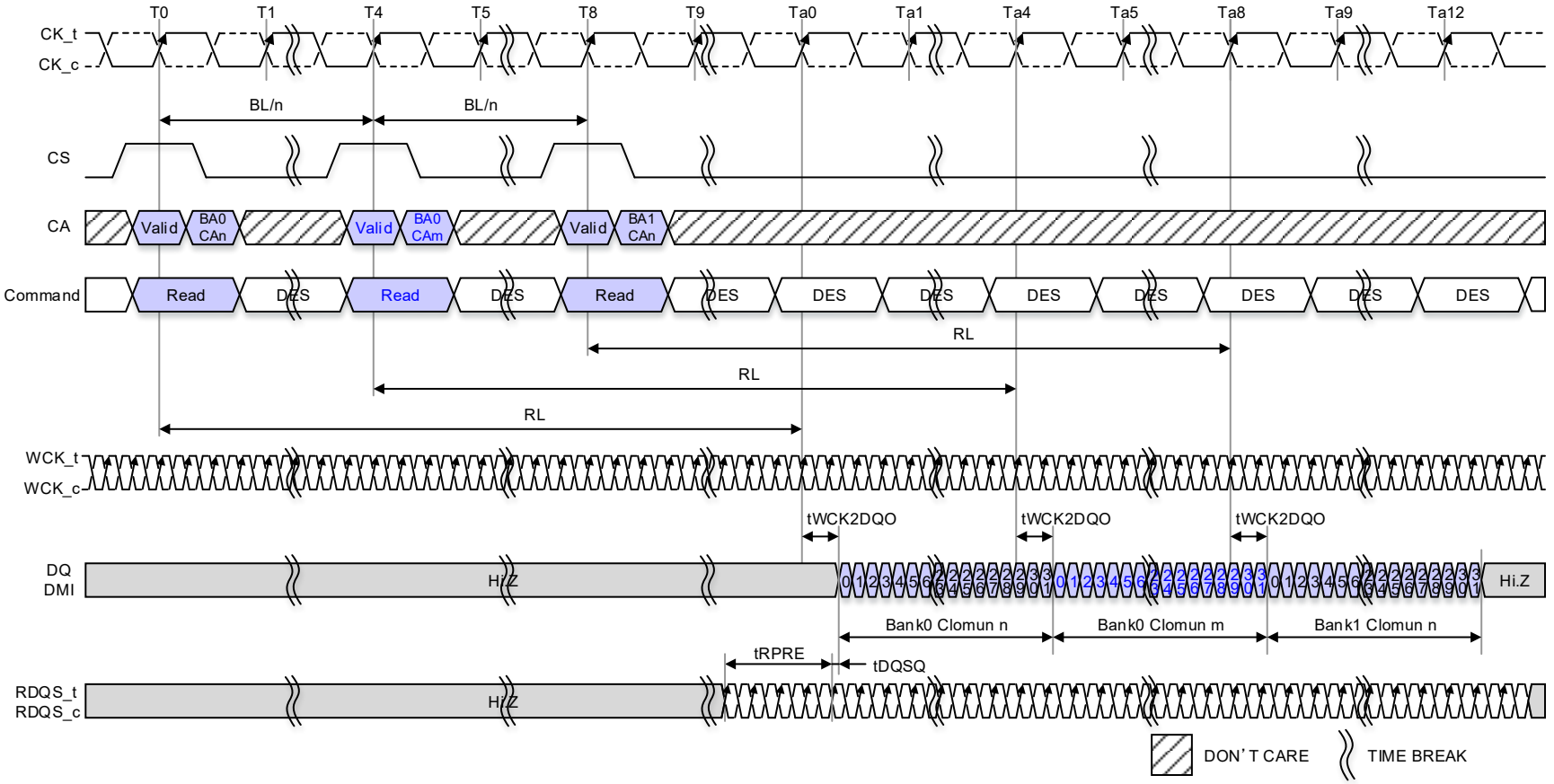

NOTE 1 MR3 OP[4:3]=01_B: 8B mode, MR18 OP[7]=0_B: CKR (WCK vs. CK)= 4:1
NOTE 2 tWCK2CK is 0ps in this instance.
NOTE 3 DES commands are shown for ease of illustration; other commands may be valid at these times.

Figure 6 — Read Operation 8B mode, CKR (WCK vs. CK) = 4:1, BL=32

2.2.3.4 Burst Operation (Cont'd)

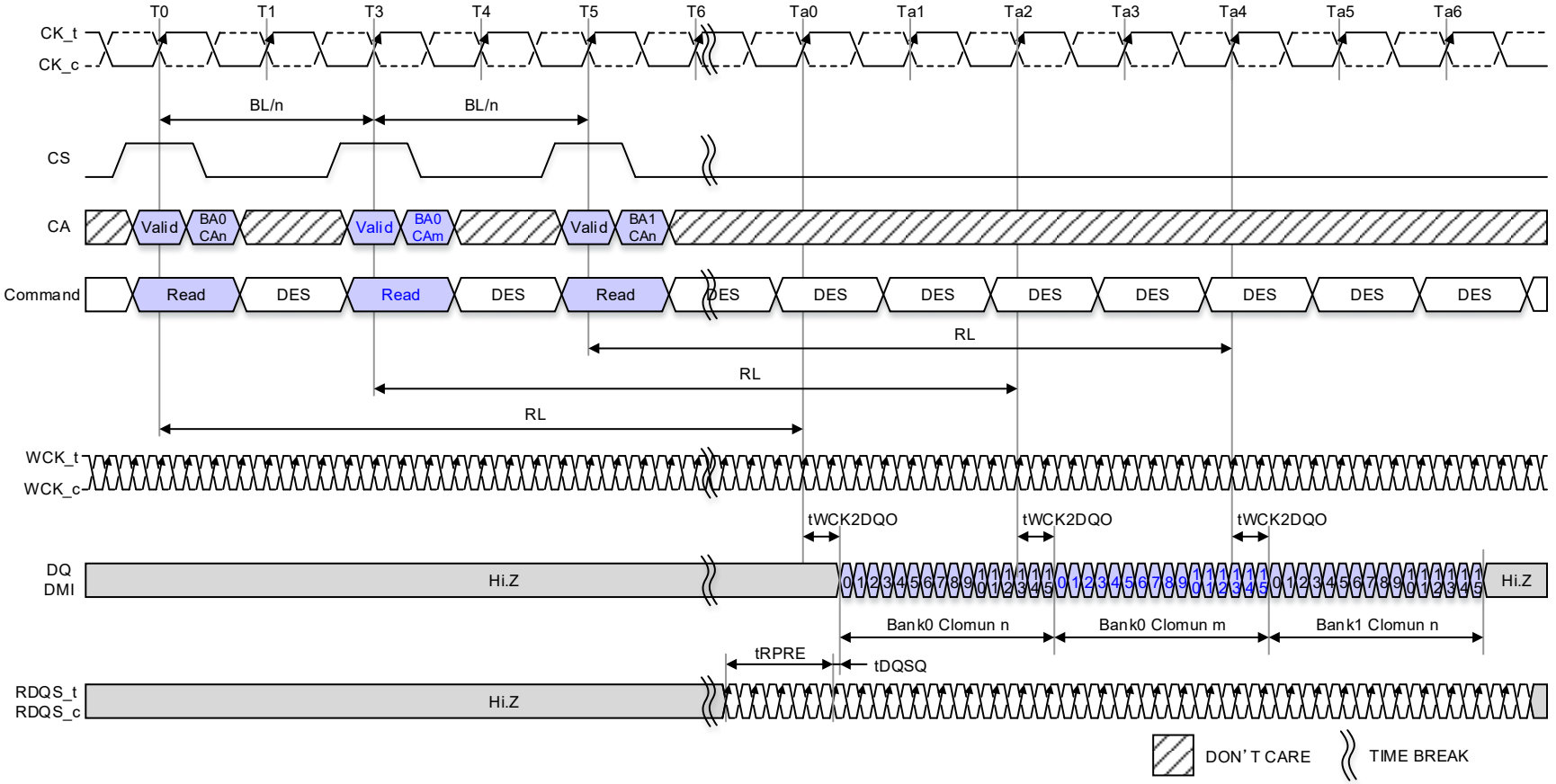

NOTE 1 MR3 OP[4:3]=10B: 16B Mode, MR18 OP[7]=0B: CKR (WCK vs. CK)= 4:1.
NOTE 2 tWCK2CK is 0ps in this instance.
NOTE 3 DES commands are shown for ease of illustration; other commands may be valid at these times.

Figure 7 — Read Operation 16B mode, CKR (WCK vs. CK) = 4:1, BL=16

2.2.3.4 Burst Operation (Cont'd)

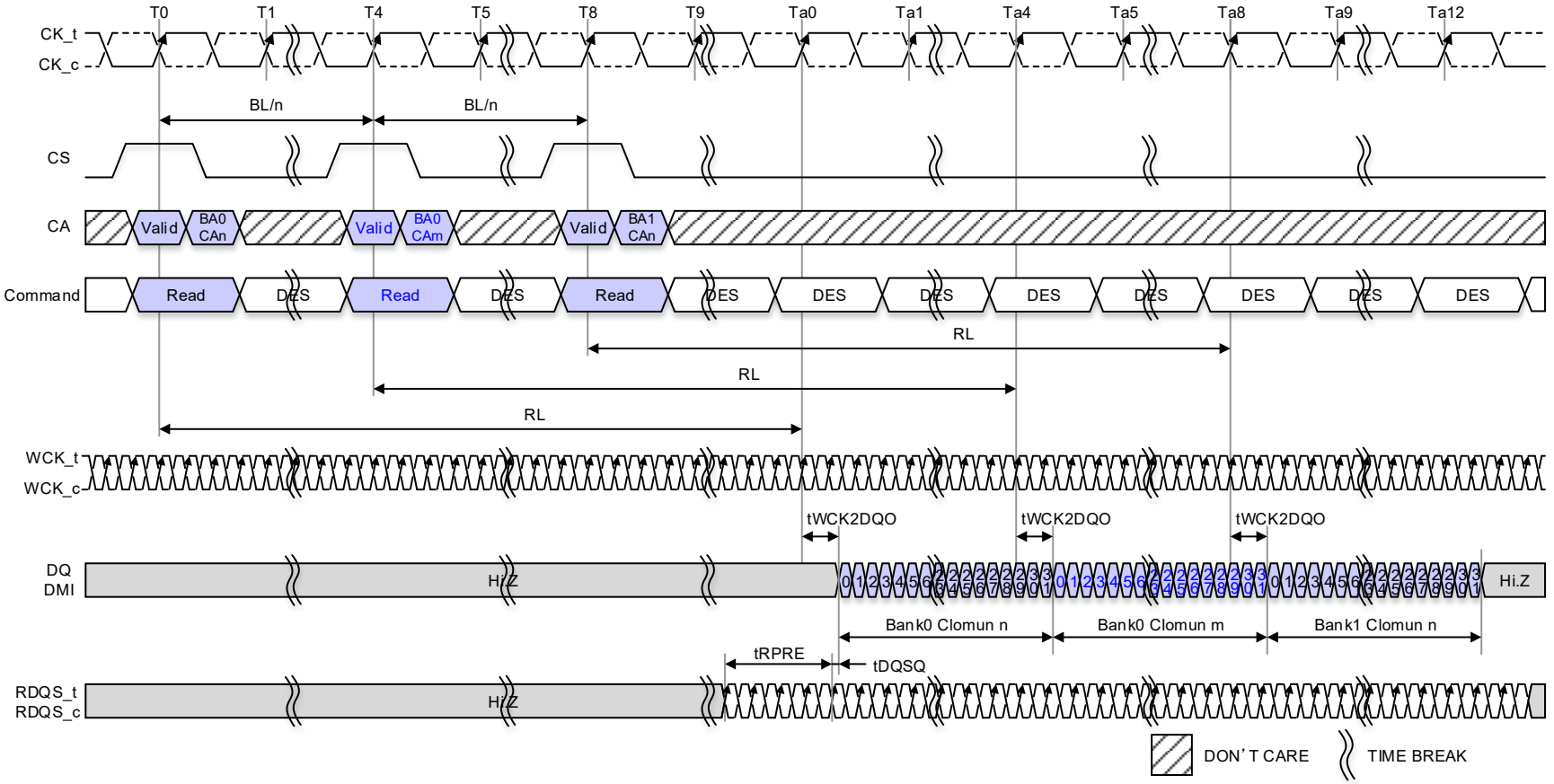

NOTE 1 MR3 OP[4:3]=10B: 16B mode, MR18 OP[7]=0B: CKR (WCK vs. CK)= 4:1.
NOTE 2 tWCK2CK is 0ps in this instance.
NOTE 3 DES commands are shown for ease of illustration; other commands may be valid at these times.

Figure 8 — Read Operation 16B mode, CKR (WCK vs. CK) = 4:1, BL=32

2.2.4 LPDDR5 SDRAM Addressing

Table 5 — LPDDR5 SDRAM x16 mode Addressing for BG Mode (4Banks/4Bank Groups)

Memory Density	2Gb	3Gb	4Gb	6Gb	8Gb	12Gb	16Gb	24Gb	32Gb
Configuration	8Mb x 16DQ x 4 BG x 4 banks	12Mb x 16DQ x 4 BG x 4 banks	16Mb x 16DQ x 4 BG x 4 banks	24Mb x 16DQ x 4 BG x 4 banks	32Mb x 16DQ x 4 BG x 4 banks	48Mb x 16DQ x 4 BG x 4 banks	64Mb x 16DQ x 4 BG x 4 banks	96Mb x 16DQ x 4 BG x 4 banks	128Mb x 16DQ x 4 BG x 4 banks
Number of Banks in BG	4	4	4	4	4	4	4	4	4
Number of Bank Groups	4	4	4	4	4	4	4	4	4
Array Pre-Fetch	256	256	256	256	256	256	256	256	256
Number of Rows	8,192	12,288	16,384	24,576	32,768	49,152	65,536	98,304	131,072
Number of Columns (fetch boundaries)	64	64	64	64	64	64	64	64	64
Page Size (Bytes)	2,048	2,048	2,048	2,048	2,048	2,048	2,048	2,048	2,048
Density	2,147,483,648	3,221,225,472	4,294,967,296	6,442,450,944	8,589,934,592	12,884,901,888	17,179,869,184	25,769,803,776	34,359,738,368
Bank Address	BA0 - BA1	BA0 - BA1	BA0 - BA1	BA0 - BA1	BA0 - BA1	BA0 - BA1	BA0 - BA1	BA0 - BA1	BA0 - BA1
Bank Group Addresses	BG0 - BG1	BG0 - BG1	BG0 - BG1	BG0 - BG1	BG0 - BG1	BG0 - BG1	BG0 - BG1	BG0 - BG1	BG0 - BG1
Row Addresses	R0 - R12	R0 - R13 (R12=0 when R13=1)	R0 - R13	R0 - R14 (R13=0 when R14=1)	R0 - R14	R0 - R15 (R14=0 when R15=1)	R0 - R15	R0 - R16 (R15=0 when R16=1)	R0 - R16
Column Addresses	C0-C5	C0-C5	C0-C5	C0-C5	C0-C5	C0-C5	C0-C5	C0-C5	C0-C5
Burst Addresses	B0-B3	B0-B3	B0-B3	B0-B3	B0-B3	B0-B3	B0-B3	B0-B3	B0-B3
Burst Starting Address Boundary	128-bit	128-bit	128-bit	128-bit	128-bit	128-bit	128-bit	128-bit	128-bit
Native Burst Length	16	16	16	16	16	16	16	16	16

NOTE 1 The lower three burst addresses (B0-B2) are assumed to be "zero" and are not transmitted on the CA bus.

NOTE 2 Row and Column address values on the CA bus that are not used for a particular density must be at valid logic levels.

NOTE 3 For non - binary memory densities, only quarter of the row address space is invalid. When the MSB address bit is "HIGH", then the MSB - 1 address bit must be "LOW".

NOTE 4 The row address input which violates the restriction described in Note 3 in this table may result in undefined or vendor specific behavior. Consult the memory vendor for more information.

2.2.4 LPDDR5 SDRAM Addressing (Cont'd)

Table 6 — LPDDR5 SDRAM x8 mode Addressing for BG Mode

Memory Density	2Gb	3Gb	4Gb	6Gb	8Gb	12Gb	16Gb	24Gb	32Gb
Configuration	16Mb x 8DQ x 4 BG x 4 banks	24Mb x 8DQ x 4 BG x 4 banks	32Mb x 8DQ x 4 BG x 4 banks	48Mb x 8DQ x 4 BG x 4 banks	64Mb x 8DQ x 4 BG x 4 banks	96Mb x 8DQ x 4 BG x 4 banks	128Mb x 8DQ x 4 BG x 4 banks	196Mb x 8DQ x 4 BG x 4 banks	256Mb x 8DQ x 4 BG x 4 banks
Number of Banks in BG	4	4	4	4	4	4	4	4	4
Number of Bank Groups	4	4	4	4	4	4	4	4	4
Array Pre-Fetch	128	128	128	128	128	128	128	128	128
Number of Rows	16,384	24,576	32,768	49,152	65,536	98,304	131,072	196,608	262,144
Number of Columns (fetch boundaries)	64	64	64	64	64	64	64	64	64
Page Size (Bytes)	1,024	1,024	1,024	1,024	1,024	1,024	1,024	1,024	1,024
Density	2,147,483,648	3,221,225,472	4,294,967,296	6,442,450,944	8,589,934,592	12,884,901,888	17,179,869,184	25,769,803,776	34,359,738,368
Bank Address	BA0 - BA1	BA0 - BA1	BA0 - BA1	BA0 - BA1	BA0 - BA1	BA0 - BA1	BA0 - BA1	BA0 - BA1	BA0 - BA1
Bank Group Addresses	BG0 - BG1	BG0 - BG1	BG0 - BG1	BG0 - BG1	BG0 - BG1	BG0 - BG1	BG0 - BG1	BG0 - BG1	BG0 - BG1
Row Addresses	R0 - R13	R0 - R14 (R13=0 when R14=1)	R0 - R14	R0 - R15 (R14=0 when R15=1)	R0 - R15	R0 - R16 (R15=0 when R16=1)	R0 - R16	R0 - R17 (R16=0 when R17=1)	R0 - R17
Column Addresses	C0-C5	C0-C5	C0-C5	C0-C5	C0-C5	C0-C5	C0-C5	C0-C5	C0-C5
Burst Addresses	B0-B3	B0-B3	B0-B3	B0-B3	B0-B3	B0-B3	B0-B3	B0-B3	B0-B3
Burst Starting Address Boundary	128-bit	128-bit	128-bit	128-bit	128-bit	128-bit	128-bit	128-bit	128-bit
Native Burst Length	16	16	16	16	16	16	16	16	16

NOTE 1 The lower three burst addresses (B0-B2) are assumed to be "zero" and are not transmitted on the CA bus.

NOTE 2 Row and Column address values on the CA bus that are not used for a particular density must be at valid logic levels.

NOTE 3 For non - binary memory densities, only quarter of the row address space is invalid. When the MSB address bit is "HIGH", then the MSB - 1 address bit must be "LOW".

NOTE 4 The row address input which violates the restriction described in Note 3 in this table may result in undefined or vendor specific behavior. Consult the memory vendor for more information.

2.2.4 LPDDR5 SDRAM Addressing (Cont'd)

Table 7 — LPDDR5 SDRAM x16 mode Addressing for 8B Mode

Memory Density	2Gb	3Gb	4Gb	6Gb	8Gb	12Gb	16Gb	24Gb	32Gb
Configuration	16Mb x 16DQ x 8 banks	24Mb x 16DQ x 8 banks	32Mb x 16DQ x 8 banks	48Mb x 16DQ x 8 banks	64Mb x 16DQ x 8 banks	96Mb x 16DQ x 8 banks	128Mb x 16DQ x 8 banks	192Mb x 16DQ x 8 banks	256Mb x 16DQ x 8 banks
Number of Banks	8	8	8	8	8	8	8	8	8
Array Pre-Fetch	512	512	512	512	512	512	512	512	512
Number of Rows	8,192	12,288	16,384	24,576	32,768	49,152	65,536	98,304	131,072
Number of Columns (fetch boundaries)	64	64	64	64	64	64	64	64	64
Page Size (Bytes)	4,096	4,096	4,096	4,096	4,096	4,096	4,096	4,096	4,096
Density	2,147,483,648	3,221,225,472	4,294,967,296	6,442,450,944	8,589,934,592	12,884,901,888	17,179,869,184	25,769,803,776	34,359,738,368
Bank Address	BA0 - BA2	BA0 - BA2	BA0 - BA2	BA0 - BA2	BA0 - BA2	BA0 - BA2	BA0 - BA2	BA0 - BA2	BA0 - BA2
Row Addresses	R0 - R12	R0 - R13 (R12=0 when R13=1)	R0 - R13	R0 - R14 (R13=0 when R14=1)	R0 - R14	R0 - R15 (R14=0 when R15=1)	R0 - R15	R0 - R16 (R15=0 when R16=1)	R0 - R16
Column Addresses	C0-C5	C0-C5	C0-C5	C0-C5	C0-C5	C0-C5	C0-C5	C0-C5	C0-C5
Burst Addresses	B0-B4	B0-B4	B0-B4	B0-B4	B0-B4	B0-B4	B0-B4	B0-B4	B0-B4
Burst Starting Address Boundary	128-bit	128-bit	128-bit	128-bit	128-bit	128-bit	128-bit	128-bit	128-bit
Native Burst Length	32	32	32	32	32	32	32	32	32

NOTE 1 The lower three burst addresses (B0-B2) are assumed to be "zero" and are not transmitted on the CA bus.

NOTE 2 Row and Column address values on the CA bus that are not used for a particular density must be at valid logic levels.

NOTE 3 For non - binary memory densities, only quarter of the row address space is invalid. When the MSB address bit is "HIGH", then the MSB - 1 address bit must be "LOW".

NOTE 4 The row address input which violates the restriction described in Note 3 in this table may result in undefined or vendor specific behavior. Consult the memory vendor for more information.

2.2.4 LPDDR5 SDRAM Addressing (Cont'd)

Table 8 — LPDDR5 SDRAM x8 mode Addressing for 8B Mode

Memory Density	2Gb	3Gb	4Gb	6Gb	8Gb	12Gb	16Gb	24Gb	32Gb
Configuration	32Mb x 8DQ x 8 banks	48Mb x 8DQ x 8 banks	64Mb x 8DQ x 8 banks	96Mb x 8DQ x 8 banks	128Mb x 8DQ x 8 banks	192Mb x 8DQ x 8 banks	256Mb x 8DQ x 8 banks	384Mb x 16DQ x 8 banks	512Mb x 8DQ x 8 banks
Number of Banks	8	8	8	8	8	8	8	8	8
Array Pre-Fetch	256	256	256	256	256	256	256	256	256
Number of Rows	16,384	24,576	32,768	49,152	65,536	98,304	131,072	196,608	262,144
Number of Columns (fetch boundaries)	64	64	64	64	64	64	64	64	64
Page Size (Bytes)	2,048	2,048	2,048	2,048	2,048	2,048	2,048	2,048	2,048
Density	2,147,483,648	3,221,225,472	4,294,967,296	6,442,450,944	8,589,934,592	12,884,901,888	17,179,869,184	25,769,803,776	34,359,738,368
Bank Address	BA0 - BA2	BA0 - BA2	BA0 - BA2	BA0 - BA2	BA0 - BA2	BA0 - BA2	BA0 - BA2	BA0 - BA2	BA0 - BA2
Row Addresses	R0 - R13	R0 - R14 (R13=0 when R14=1)	R0 - R14	R0 - R15 (R14=0 when R15=1)	R0 - R15	R0 - R16 (R15=0 when R16=1)	R0 - R16	R0 - R17 (R16=0 when R17=1)	R0 - R17
Column Addresses	C0-C5	C0-C5	C0-C5	C0-C5	C0-C5	C0-C5	C0-C5	C0-C5	C0-C5
Burst Addresses	B0-B4	B0-B4	B0-B4	B0-B4	B0-B4	B0-B4	B0-B4	B0-B4	B0-B4
Burst Starting Address Boundary	128-bit	128-bit	128-bit	128-bit	128-bit	128-bit	128-bit	128-bit	128-bit
Native Burst Length	32	32	32	32	32	32	32	32	32

NOTE 1 The lower three burst addresses (B0-B2) are assumed to be "zero" and are not transmitted on the CA bus.

NOTE 2 Row and Column address values on the CA bus that are not used for a particular density must be at valid logic levels.

NOTE 3 For non - binary memory densities, only quarter of the row address space is invalid. When the MSB address bit is "HIGH", then the MSB - 1 address bit must be "LOW".

NOTE 4 The row address input which violates the restriction described in Note 3 in this table may result in undefined or vendor specific behavior. Consult the memory vendor for more information.

2.2.4 LPDDR5 SDRAM Addressing (Cont'd)

Table 9 — LPDDR5 SDRAM x16 mode Addressing for 16B Mode

Memory Density	2Gb	3Gb	4Gb	6Gb	8Gb	12Gb	16Gb	24Gb	32Gb
Configuration	8Mb x 16DQ x 16 banks	12Mb x 16DQ x 16 banks	16Mb x 16DQ x 16 banks	24Mb x 16DQ x 16 banks	32Mb x 16DQ x 16 banks	48Mb x 16DQ x 16 banks	64Mb x 16DQ x 16 banks	96Mb x 16DQ x 16 banks	128Mb x 16DQ x 16 banks
Number of Banks	16	16	16	16	16	16	16	16	16
Array Pre-Fetch	256	256	256	256	256	256	256	256	256
Number of Rows	8,192	12,288	16,384	24,576	32,768	49,152	65,536	98,304	131,072
Number of Columns (fetch boundaries)	64	64	64	64	64	64	64	64	64
Page Size (Bytes)	2,048	2,048	2,048	2,048	2,048	2,048	2,048	2,048	2,048
Density	2,147,483,648	3,221,225,472	4,294,967,296	6,442,450,944	8,589,934,592	12,884,901,888	17,179,869,184	25,769,803,776	34,359,738,368
Bank Address	BA0 - BA3	BA0 - BA3	BA0 - BA3	BA0 - BA3	BA0 - BA3	BA0 - BA3	BA0 - BA3	BA0 - BA3	BA0 - BA3
Row Addresses	R0 - R12	R0 - R13 (R12=0 when R13=1)	R0 - R13	R0 - R14 (R13=0 when R14=1)	R0 - R14	R0 - R15 (R14=0 when R15=1)	R0 - R15	R0 - R16 (R15=0 when R16=1)	R0 - R16
Column Addresses	C0-C5	C0-C5	C0-C5	C0-C5	C0-C5	C0-C5	C0-C5	C0-C5	C0-C5
Burst Addresses	B0-B3	B0-B3	B0-B3	B0-B3	B0-B3	B0-B3	B0-B3	B0-B3	B0-B3
Burst Starting Address Boundary	128-bit	128-bit	128-bit	128-bit	128-bit	128-bit	128-bit	128-bit	128-bit
Native Burst Length	16	16	16	16	16	16	16	16	16

NOTE 1 The lower three burst addresses (B0-B2) are assumed to be "zero" and are not transmitted on the CA bus.

NOTE 2 Row and Column address values on the CA bus that are not used for a particular density must be at valid logic levels.

NOTE 3 For non - binary memory densities, only quarter of the row address space is invalid. When the MSB address bit is "HIGH", then the MSB - 1 address bit must be "LOW".

NOTE 4 The row address input which violates the restriction described in Note 3 in this table may result in undefined or vendor specific behavior. Consult the memory vendor for more information.

2.2.4 LPDDR5 SDRAM Addressing (Cont'd)

Table 10 — LPDDR5 SDRAM x8 mode Addressing for 16B Mode

Memory Density	2Gb	3Gb	4Gb	6Gb	8Gb	12Gb	16Gb	24Gb	32Gb
Configuration	16Mb x 8DQ x 16 banks	24Mb x 8DQ x 16 banks	32Mb x 8DQ x 16 banks	48Mb x 8DQ x 16 banks	64Mb x 8DQ x 16 banks	96Mb x 8DQ x 16 banks	128Mb x 8DQ x 16 banks	192Mb x 8DQ x 16 banks	256Mb x 8DQ x 16 banks
Number of Banks	16	16	16	16	16	16	16	16	16
Array Pre-Fetch	128	128	128	128	128	128	128	128	128
Number of Rows	16,384	24,576	32,768	49,152	65,536	98,304	131,072	196,608	262,144
Number of Columns (fetch boundaries)	64	64	64	64	64	64	64	64	64
Page Size (Bytes)	1,024	1,024	1,024	1,024	1,024	1,024	1,024	1,024	1,024
Density	2,147,483,648	3,221,225,472	4,294,967,296	6,442,450,944	8,589,934,592	12,884,901,888	17,179,869,184	25,769,803,776	34,359,738,368
Bank Address	BA0 - BA3	BA0 - BA3	BA0 - BA3	BA0 - BA3	BA0 - BA3	BA0 - BA3	BA0 - BA3	BA0 - BA3	BA0 - BA3
Row Addresses	R0 - R13	R0 - R14 (R13=0 when R14=1)	R0 - R14	R0 - R15 (R14=0 when R15=1)	R0 - R15	R0 - R16 (R15=0 when R16=1)	R0 - R16	R0 - R17 (R16=0 when R17=1)	R0 - R17
Column Addresses	C0-C5	C0-C5	C0-C5	C0-C5	C0-C5	C0-C5	C0-C5	C0-C5	C0-C5
Burst Addresses	B0-B3	B0-B3	B0-B3	B0-B3	B0-B3	B0-B3	B0-B3	B0-B3	B0-B3
Burst Starting Address Boundary	128-bit	128-bit	128-bit	128-bit	128-bit	128-bit	128-bit	128-bit	128-bit
Native Burst Length	16	16	16	16	16	16	16	16	16

NOTE 1 The lower three burst addresses (B0-B2) are assumed to be "zero" and are not transmitted on the CA bus.

NOTE 2 Row and Column address values on the CA bus that are not used for a particular density must be at valid logic levels.

NOTE 3 For non - binary memory densities, only quarter of the row address space is invalid. When the MSB address bit is "HIGH", then the MSB - 1 address bit must be "LOW".

NOTE 4 The row address input which violates the restriction described in Note 3 in this table may result in undefined or vendor specific behavior. Consult the memory vendor for more information.

2.2.5 Speed Grades

Table 11 — LPDDR5 Speed Grades

OPERATING MODE / SPEED GRADE			LPDDR5-5500	LPDDR5-6400	Unit
DVFSC[2]	WCK:CK Ratio[3]	Banks[4]	Maximum Data Rate[1]		
Disabled	4:1	BG	5500	6400	Mbps
Disabled	4:1	8B	5500	6400	
Disabled	4:1	16B	3200	3200	
Disabled	2:1	BG	Not Supported		
Disabled	2:1	8B	3200	3200	
Disabled	2:1	16B	3200	3200	
Enabled	4:1	BG	Not Supported		
Enabled	4:1	8B	1600	1600	
Enabled	4:1	16B	1600	1600	
Enabled	2:1	BG	Not Supported		
Enabled	2:1	8B	1600	1600	
Enabled	2:1	16B	1600	1600	
Link ECC Feature support by DRAM			Optional	Required	

NOTE 1 Speed grades represent the maximum data rate capability of the device. Higher speed grade devices can be operated at lower data rates. Achieving maximum data rates requires appropriate latency settings.

NOTE 2 DVFSC is enabled/disabled in MR19 OP[1:0] and MR13 OP[7].

NOTE 3 WCK:CK ratio is set in MR18 OP[7].

NOTE 4 Bank organization (BG, 8B or 16B) is set in MR3 OP[4:3].

NOTE 5 DVFSQ is supported up to TBD Mbps for all speed grades.

2.2.6 Burst Sequence

Table 12 — Burst Sequence for READ (8bank mode)

Burst Length	Burst Type	B4	B3	B2	B1	B0	Burst Cycle Number and Burst Address Sequence																																
							1	2	3	4	5	6	7	8	9	10	11	12	13	14	15	16	17	18	19	20	21	22	23	24	25	26	27	28	29	30	31	32
32	SEQ	0	0	0	0	0	0	1	2	3	4	5	6	7	8	9	A	B	C	D	E	F	10	11	12	13	14	15	16	17	18	19	1A	1B	1C	1D	1E	1F
		0	1	0	0	0	8	9	A	B	C	D	E	F	0	1	2	3	4	5	6	7	18	19	1A	1B	1C	1D	1E	1F	10	11	12	13	14	15	16	17
		1	0	0	0	0	10	11	12	13	14	15	16	17	18	19	1A	1B	1C	1D	1E	1F	0	1	2	3	4	5	6	7	8	9	A	B	C	D	E	F
		1	1	0	0	0	18	19	1A	1B	1C	1D	1E	1F	10	11	12	13	14	15	16	17	8	9	A	B	C	D	E	F	0	1	2	3	4	5	6	7

NOTE 1 B0-B2 are assumed to be '0', and are not transmitted on the command bus.
NOTE 2 The starting burst address is on 128-bit (8n) boundaries.

Table 13 — Burst Sequence for READ (4bank/ 4Bank Group mode or 16Bank mode)

Burst Length	Burst Type	C0	B3	B2	B1	B0	Burst Cycle Number and Burst Address Sequence																																
							1	2	3	4	5	6	7	8	9	10	11	12	13	14	15	16	17	18	19	20	21	22	23	24	25	26	27	28	29	30	31	32
16	SEQ	V	0	0	0	0	0	1	2	3	4	5	6	7	8	9	A	B	C	D	E	F																
		V	1	0	0	0	8	9	A	B	C	D	E	F	0	1	2	3	4	5	6	7																
32	SEQ	0	0	0	0	0	0	1	2	3	4	5	6	7	8	9	A	B	C	D	E	F	10	11	12	13	14	15	16	17	18	19	1A	1B	1C	1D	1E	1F
		0	1	0	0	0	8	9	A	B	C	D	E	F	0	1	2	3	4	5	6	7	18	19	1A	1B	1C	1D	1E	1F	10	11	12	13	14	15	16	17
		1	0	0	0	0	10	11	12	13	14	15	16	17	18	19	1A	1B	1C	1D	1E	1F	0	1	2	3	4	5	6	7	8	9	A	B	C	D	E	F
		1	1	0	0	0	18	19	1A	1B	1C	1D	1E	1F	10	11	12	13	14	15	16	17	8	9	A	B	C	D	E	F	0	1	2	3	4	5	6	7

NOTE 1 B0-B2 are assumed to be '0', and are not transmitted on the command bus.
NOTE 2 The starting burst address is on 128-bit (8n) boundaries.

Table 14 — Burst sequence for Write

Burst Length	Burst Type	C0/ B4	B3	B2	B1	B0	Burst Cycle Number and Burst Address Sequence																																
							1	2	3	4	5	6	7	8	9	10	11	12	13	14	15	16	17	18	19	20	21	22	23	24	25	26	27	28	29	30	31	32
16	SEQ	V	0	0	0	0	0	1	2	3	4	5	6	7	8	9	A	B	C	D	E	F																
32	SEQ	0	0	0	0	0	0	1	2	3	4	5	6	7	8	9	A	B	C	D	E	F	10	11	12	13	14	15	16	17	18	19	1A	1B	1C	1D	1E	1F

NOTE 1 B0-B2 are assumed to be '0', and are not transmitted on the command bus.
NOTE 2 The starting burst address is on 256-bit (16n) boundaries for burst length 16 and 512-bit (32n) boundaries for Burst length 32.
NOTE 3 B3 shall be set to '0' for all Write operations.
NOTE 4 C0 shall be set to '0' for all Write operations in BL32 mode.

3 Clocking

LPDDR5 SDRAM's command and address interface operates from a differential clock (CK_t and CK_c). Commands and addresses are registered double data rate (DDR) at every rising edge of CK_t and CK_c. CS is sampled at the rising edge of CK_t and falling edge of CK_c. LPDDR5 uses a DDR data interface. The data interface uses two differential forwarded clocks (WCK_t/WCK_c) that are source synchronous to the DQs. DDR means that the data is registered at every rising edge of WCK_t and rising edge of WCK_c. WCK_t and WCK_c operate at twice or quadruple the frequency of the command/address clock (CK_t/CK_c). WCK_t/WCK_c is used to sample DQ data for write operation and to toggle DQ data for read operation. WCK_t/WCK_c is required to start toggling before starting write or read DQ data bursts. Any commands that require DQ data burst initiate a WCK2CK Sync sequence in LPDDR5 SDRAM. After WCK2CK Sync sequence, SDRAM internal WCK0 is aligned with CK to get ready for DQ data burst. This SDRAM internal WCK2CK Sync sequence is hidden from the memory controller, not requiring any extra commands. RDQS_t and RDQS_c are also generated from WCK clock.

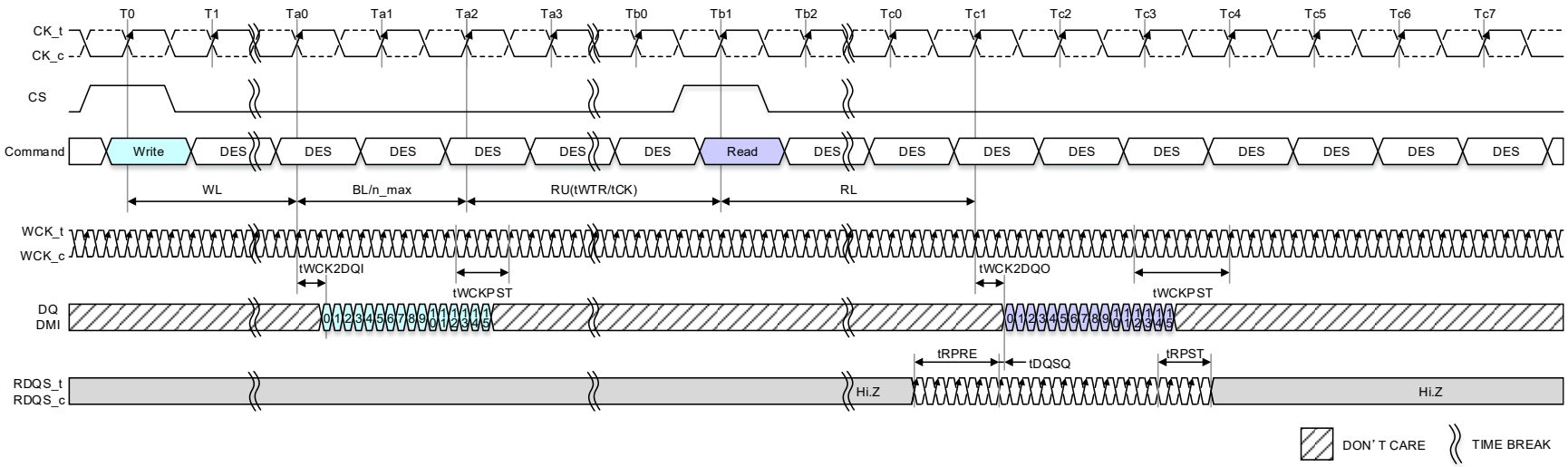

Figure 9 - Clocking and Interface Relationship: Write to Read timing, 16B mode, CKR=4:1, BL=16, WCK Always On mode

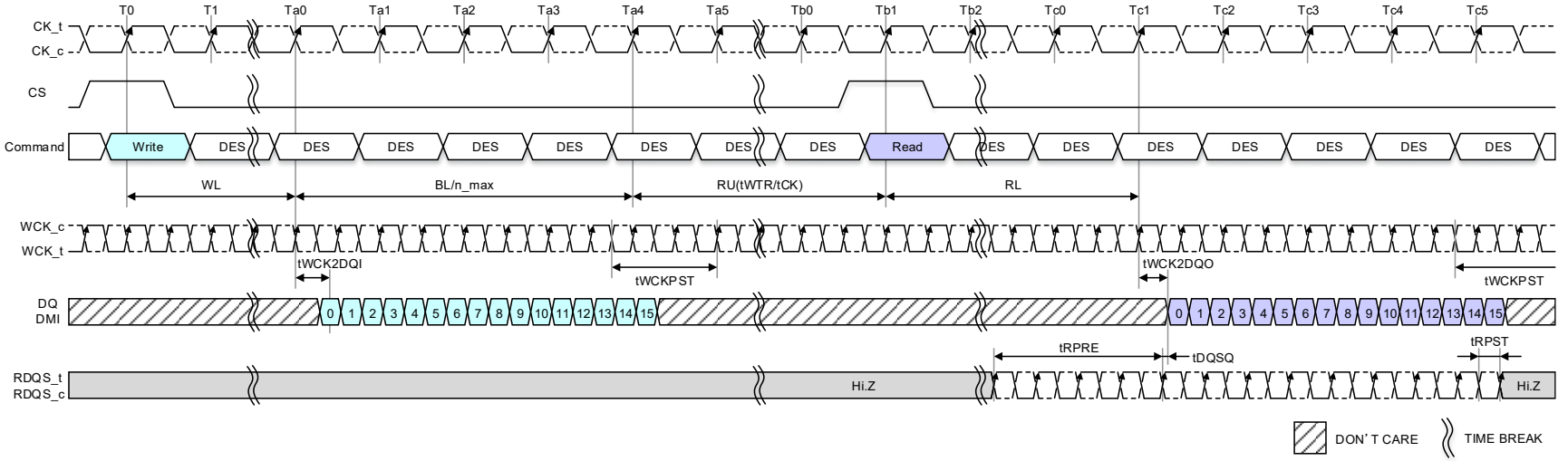

Figure 10 - Clocking and Interface Relationship: Write to Read timing, 16B mode, CKR=2:1, BL=16, WCK Always On mode

Table 15 - Example Clock and Interface Signal Frequency Relationship

Pin	Speed		Unit
	CKR=2:1	CKR=4:1	
CK_t, CK_c	800	800	MHz
Command/Address	1600	1600	Mbps/pin
WCK_t, WCK_c	1600	3200	MHz
DQ, DMI	3200	6400	Mbps/pin

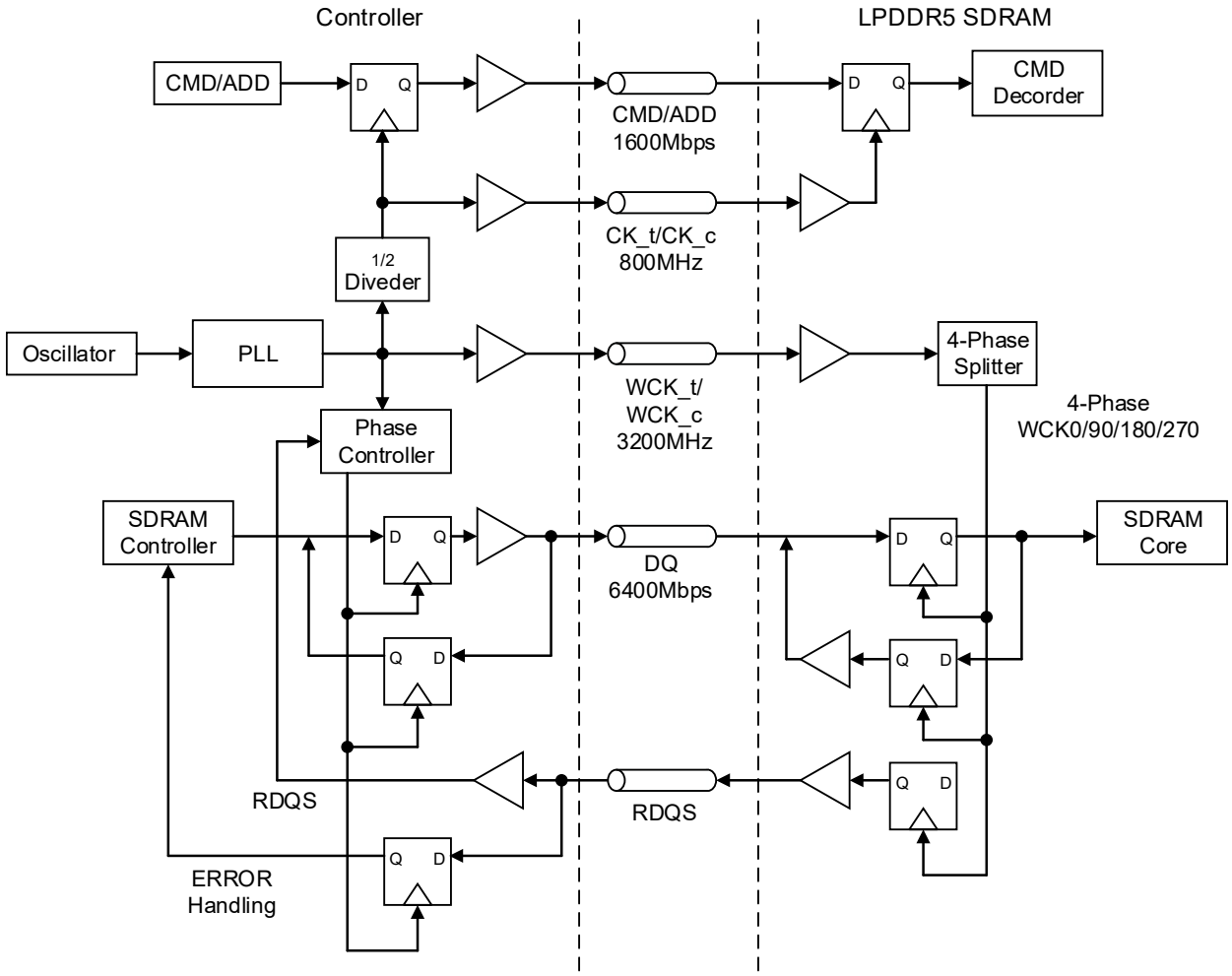

Figure 11 - Block Diagram of an example system: CKR=4:1

4 Initialization and Training

4.1 Power-up, Initialization and Power-off Procedure

For power-up and reset initialization, in order to prevent DRAM from functioning improperly, default values of the following MR settings are defined as Table 16.

Table 16 — MRS Default setting

Item	MRS	Default Setting	Description
FSP-OP/WR	MR16 OP[3:0]	0000_B	FSP-OP/WR[0] is enabled
WLS	MR3 OP[5]	0_B	Write Latency Set A is selected
WL	MR1 OP[7:4]	0000_B	WL = 4
RL	MR2 OP[3:0]	0000_B	RL = 6, nRBTP = 0
nWR	MR2 OP[7:4]	0000_B	nWR = 5
DBI-WR/RD	MR3 OP[7:6]	00_B	Write & Read DBI are disabled
CA ODT	MR11 OP[6:4]	000_B	CA ODT is disabled
DQ ODT	MR11 OP[2:0]	000_B	DQ ODT is disabled
Vref (CA) Value	MR12 OP[6:0]	1010000_B	VREF(CA): 50.0% of VDDQ
Vref (DQ) Value	MR14 OP[6:0] MR15 OP[6:0]	1010000_B 1010000_B	VREF(DQ): 50.0% of VDDQ
Dual VDD2	MR13 OP[7]	0_B	Dual VDD2 rail (1.05V & 0.9V) used[1)]
CKR	MR18 OP[7]	1_B	2:1 ratio
ZQ Mode	MR28 OP[5]	0_B	Background ZQ Calibration
NOTE 1 DRAM can be powered up in either dual rail or single rail mode with the default setting. MR13 OP[7] shall be set correctly prior to CBT.			

4.1.1 Voltage Ramp and Device Initialization

The following sequence shall be used to power up the LPDDR5 SDRAM. Unless specified otherwise, these steps are mandatory.

1) While applying power (after Ta), RESET_n is recommended to be LOW (≤0.2 x VDD2H) and all other inputs shall be between VILmin and VIHmax. The SDRAM outputs remain at High-Z while RESET_n is held LOW. Power supply voltage ramp requirements are provided in
Table 17. VDD1 must ramp at the same time or earlier than VDD2H. VDD2H must ramp at the same time or earlier than VDD2L. VDD2L must ramp at the same time or earlier than VDDQ.

Table 17 — Voltage Ramp Conditions

After	Applicable Conditions
Ta is reached	VDD1 must be greater than VDD2H
	VDD2H must be equal to or greater than VDD2L
	VDD2L must be greater than VDDQ-200mV
NOTE 1 Ta is the point when any power supply first reaches 300mV. NOTE 2 Voltage ramp conditions in Table 17 apply between Ta and power-off (controlled or uncontrolled). NOTE 3 Tb is the point at which all supply voltages are within their defined ranges.	

NOTE 4 Power ramp duration tINIT0 (Tb-Ta) must not exceed 20ms.

4.1.1 Voltage Ramp and Device Initialization (Cont'd)

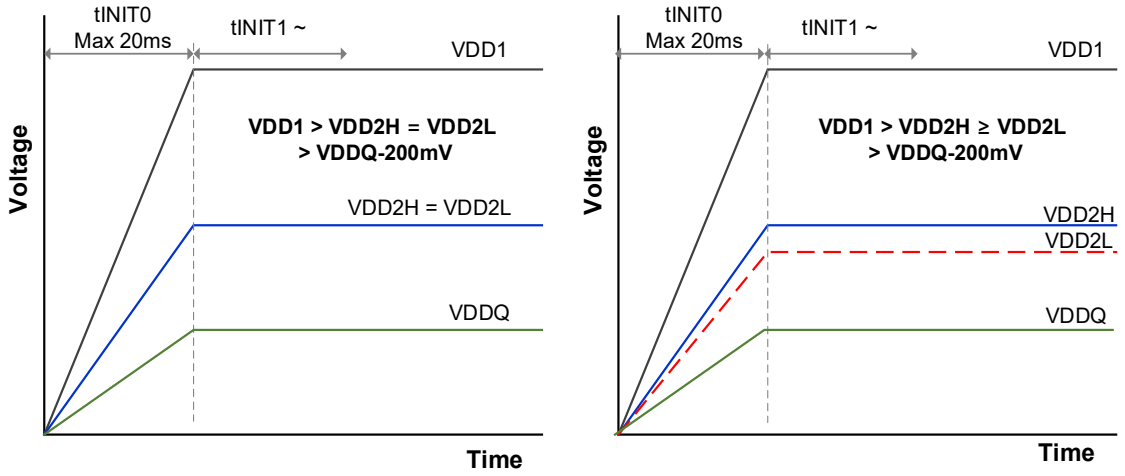

Figure 12 — Requirement for Voltage Ramp Control

2) Following the completion of the voltage ramp (Tb), RESET_n must be maintained LOW. DQ, DMI, WCK_t and WCK_c, RDQS_t, CK_t, CK_c and CA voltage levels must be between VSS and VDDQ during voltage ramp to avoid latch-up. CS level is required to be equal or less than ViLPD Max to prevent malfunction before a starting point of tINIT2.

3) Beginning at Tb, RESET_n must remain LOW for at least tINIT1(Tc), after which RESET_n can be de-asserted to HIGH(Tc).

4.1.1 Voltage Ramp and Device Initialization (Cont'd)

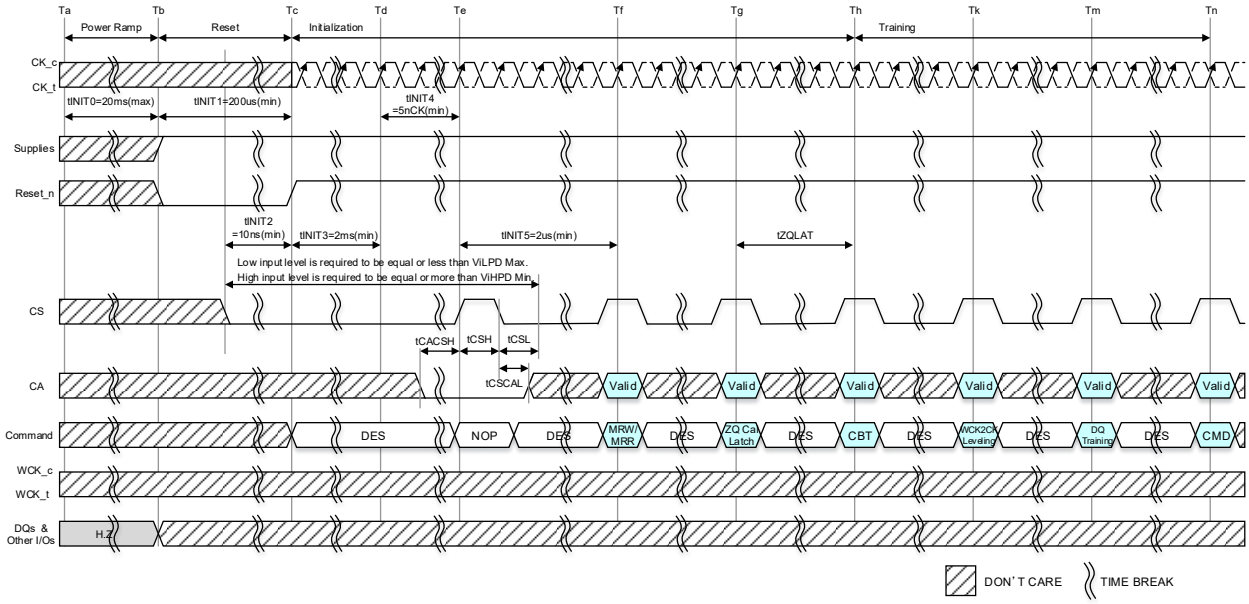

NOTE 1 Training is optional and may be done at the system architect's direction. The training sequence after ZQ_CAL latch in this figure (Th) is simplified recommendation and actual training sequence may vary depending on systems.

NOTE 2 Initial ZQ Calibration is started automatically by DRAM when RESET_n goes high after tINIT1 and is completed before Td.

NOTE 3 For the single VDD2 rail system, it is recommended to set MR13 OP[7] 1_B to switch VDD2 mode right after the time any MRW/MRR can be asserted(Tf) prior to CBT.

Figure 13 — Power Ramp and Initialization Sequence

4) Almost at the same time when RESET_n is de-asserted, CK_t and CK_c need to be toggle or valid to be complementary level.

5) CK_t and CK_c are required to be toggling (Td) and stabilized for tINIT4 before CS receives one toggling (Te).

6) After tINIT4, wait minimum of tINIT5 to issue any MRR or MRW commands (Tf). When issuing the first command (Tf), the clock frequency must be within the range defined for tCKb. Some AC parameters (for example, tWCKCK) could have relaxed timings (such as tWCKCKb) before the system is appropriately configured.

4.1.1 Voltage Ramp and Device Initialization (Cont'd)

7) Since LPDDR5 initial ZQ calibration is done automatically after ramp up, ZQ Latch command should be issued. After tZQLAT is satisfied (Th) the command bus (internal VREF(CA), CS, and CA) should be trained for high-speed operation by issuing MRW command (Command Bus Training Mode). This command is used to calibrate the SDRAM's internal VREF and align CS/CA with CK for high-speed operation. The LPDDR5 SDRAM will power-up with receivers configured for low-speed operations, and VREF(CA) set to a default factory setting. Normal SDRAM operation at clock speeds higher than tCKb may not be possible until command bus training has been completed.

   NOTE 1 The command bus training MRW command uses the CA bus as inputs for the calibration data stream, and outputs the results asynchronously on the DQ bus. See 4.2.2 for information on how to enter/exit the training mode.

8) After command bus training, DRAM controller must perform WCK2CK leveling. WCK2CK leveling mode is enabled when MR18-OP[6] is high (Ti). See 4.2.5.2 for detailed description of WCK2CK leveling entry and exit sequence. After finishing WCK2CK Leveling, tWCK2CK which means CK-to-WCK relationship is determined and WCK2CK-Sync. operation will be performed with the optimized margin.

9) After WCK2CK leveling, the DQ Bus (internal VREF(DQ), WCK, and DQ) should be trained for high-speed operation using the training commands (RD FIFO / WT FIFO / RD DQ Calibration) described in command truth table and by issuing MRW commands to adjust VREF(DQ)(Ti). The LPDDR5 SDRAM will power-up with receivers configured for low-speed operations and VREF(DQ) set to a default factory setting. Normal SDRAM operation at clock speeds higher than tCKb should not be attempted until DQ Bus training has been completed. The Read DQ Calibration command is used together with FIFO Write/Read commands to train DQ bus without disturbing the memory array contents. See 4.2.9 for detailed DQ Bus Training sequence.

10) At Tk, the LPDDR5 SDRAM is ready for normal operation, and is ready to accept any valid command. Any more registers that have not previously been set up for normal operation should be written at this time.

Table 18 — Initialization Timing Parameters

Parameter	Value		Unit	Comment
	Min	Max		
tINIT0	-	20	ms	Max voltage-ramp time at power-up
tINIT1	200		µs	Min Reset_n low time after completion of voltage ramp
tINIT2	10		ns	Min CS low time before RESET_n high
tINIT3	2		ms	Min CS low time after RESET_n high
tINIT4	5		tCK	Min stable clock before first CS high
tINIT5	2		µs	Min idle time before first MRW/MRR command
tZQLAT	Max(30ns, 4nCK)		ns	ZQCAL latch quiet time
tCKb	Note 1,2	Note 1,2	ns	Clock cycle time during boot
NOTE 1 Min tCKb guaranteed by DRAM test is 18ns. NOTE 2 The system may boot at a higher frequency than dictated by min tCKb. The higher boot frequency is system dependent.				

4.1.2 Reset Initialization with Stable Power

The following sequence is required for RESET at no power interruption initialization.

1) Assert RESET_n below 0.2 x VDD2H anytime when reset is needed. RESET_n needs to be maintained for minimum tPW_RESET. CS must be pulled LOW (≤VILPD) at least 10ns before de-asserting RESET_n.
2) Repeat steps 4 to 9 in 4.1.1, Voltage Ramp and Device Initialization.

Table 19 — Reset Timing Parameter

Parameter	Value		Unit	Comment
	Min	Max		
tPW_RESET	100		ns	Min RESET_n low time for Reset initialization with stable power

4.1.3 Power-off Sequence

The following procedure is required to power off the SDRAM.

While powering off, CS must be held LOW (≤VILPD) and all other inputs must be between VILmin and VIHmax. The SDRAM outputs remain at High-Z while CS is held LOW. DQ, DMI, WCK_t and WCK_c, RDQS_t, CK_t, CK_c and CA voltage levels must be between VSS and VDDQ during voltage ramp to avoid latch-up. RESET_n input levels must be between VSS and VDD2H during voltage ramp to avoid latch-up.

Tx is the point where any power supply drops below the minimum value specified.

Tz is the point where all power supplies are below 300mV. After Tz, the SDRAM is powered off.

Table 20 — Power Supply Conditions

Between	Applicable Conditions
Tx and Tz	VDD1 must be greater than VDD2H
	VDD2H must be equal to or greater than VDD2L
	VDD2L must be greater than VDDQ-200mV

4.1.4 Uncontrolled Power-off Sequence

When an uncontrolled power-off occurs, the following conditions must be met:

At Tx, when the power supply drops below the minimum values specified, all power supplies must be turned off and all power supply current capacity must be at zero, except any static charge remaining in the system.

After Tz (the point at which all power supplies first reach 300mV), the SDRAM must power off. Between Tx and Tz the relative voltage between power supplies is uncontrolled. VDD1, VDD2H and VDD2L must decrease with a slope lower than 0.5V/µs between Tx and Tz.

An uncontrolled power-off sequence can occur a maximum of 400 times over the life of the SDRAM.

Table 21 — Power Supply Conditions

Parameter	Value		Unit	Comment
	Min	Max		
tUNCTL_POFF	-	2	s	Maximum Power-Off ramp down time

4.2 Training

4.2.1 ZQ Calibration

Two ZQ calibration modes are supported - Background Calibration or Command-Based Calibration. In Background Calibration mode, calibration of the output driver and CA/DQ ODT impedance across process, temperature, and voltage occurs in the background of device operation and is designed to eliminate any need for coordination among channels (that is, it allow for channel independence) within a single package. Systems may also select Command-Based Calibration mode, which operates in a fash-ion similar to LPDDR4 devices. Command-Based Calibration mode is selected by setting MR28 OP[5]=1B.

ZQ re-calibration may be required as the LPDDR5 SDRAM voltage and/or temperature changes due to changes in the system environment. ZQ calibration can only be performed when the VDDQ voltage is set to nominal 0.5v DC or above (i.e. when DVFSQ is not active). In Background Calibration mode, the calibration shall be halted by the memory controller setting ZQ Stop when VDDQ is set to a nominal DC level below 0.5v or when VDDQ is being slewed between levels (i.e. when DVFSQ is active). In Com-mand-Based mode, ZQCal Start commands are illegal when DVFSQ is active unless ZQ Stop is set. See section 4.2.1.2 "ZQ Stop Functionality" for more information.

Changing CA ODT values (MR11-OP[6:4]) and/or DQ ODT values (MR11-OP[2:0]) will not alter the exist-ing recalibration scheme, therefore there is no need for immediate recalibration.

4.2.1.1 Calibration During Powerup and Initialization

ZQ calibration is automatically performed by all LPDDR5 die during the initialization/powerup sequence before Td shown in Figure 13 in the Power-up, Initialization, and Power-off Procedure section of this standard. A ZQCal Latch command shall be issued to all LPDDR5 die on or after Tg regardless of the state of ZQUF. ZQ Calibration mode selection may be changed anytime after Tf. For more details about changing ZQ Calibration modes see section 4.2.1.1.7.

NOTE 1 See Table 22, ZQCal Timing Parameters for calibration latency and timing.
NOTE 2 Asserting ZQ Reset will set the calibration values to their default setting.
NOTE 3 When ZQ Stop is enabled, the ZQ resource is available for use by other devices. See section 4.2.1.2 ZQ Stop Functionality.
NOTE 4 In Command-Based Calibration mode ZQCal Start commands are ignored when MR28 OP[1]=1_B.
NOTE 5 ZQ Interval and ZQ Mode MR settings are only applicable to ZQ Master die. These settings will be ignored by ZQ Slave die.
NOTE 6 After the power up initialization and reset sequences have been completed, ZQUF MR4 OP[5]=0_B.
NOTE 7 In command-based calibration mode, ZQCal Start commands only need to be issued to the ZQ Mas-ter die or dice to maintain accurate calibration. ZQCal Start commands received by non-ZQ Master die will be ignored. All die which share ZQ resources with a ZQ Master die that receives a valid ZQCal Start command will be calibrated. ZQCal Latch commands may be issued to each of these die after tZQCAL4, tZQCAL8 or tZQCAL16 has been met.
NOTE 8 LPDDR5 packages with more than one ZQ pin may include more than one ZQ Master die.

4.2.1.1.1 Background Calibration

In this mode pull-down/ODT and pull-up/Voh calibration will be performed in the background and kept up-to-date by the DRAM. Re-calibration will be performed by the LPDDR5 SDRAM within the time inter-val, tZQINT, specified in MR28 OP[3:2]. No ZQCal Start commands are required, and any ZQCal Start commands received by the DRAM will be ignored.
Pull-down/ODT calibration is controlled by each DRAM die using an external ZQ resistor connected between VDDQ and a package ball or pin (ZQ resources). These ZQ resources may be shared among a number of DRAM die up to a maximum of NZQ. Calibration will be automatically performed as part of power-up/initialization and after RESET_n assertion. Subsequent re-calibration will be kept up-to-date by the DRAM. Self arbitration by the DRAM insures that up to NZQ die within a package can share a common external ZQ resistor and avoid conflicts. Noise immunity will not be compromised when sharing the external ZQ calibration resistor.
When automatic pull-down/ODT calibration is complete, pull-up/Voh calibration will start automatically. At the completion of pull-down/ODT and pull-up/Voh calibration, MR4 OP[5] bit (ZQUF) will be set if the new calibration codes do not match the currently latched codes. An MRR of this bit will notify the system that new calibration results are available and that a ZQCal Latch command (following ZQCal Latch timing constraints) should be issued to ensure accurate calibration of Pull-down, ODT and Voh is consistently maintained. Setting of ZQUF is unique to each die regardless of configuration or sharing of the ZQ pin or pins. Alternatively the memory controller may choose not to monitor ZQUF and periodically issue ZQCal Latch commands.
Setting the MR28 OP[1]=ZQ Stop will halt all background calibration activity. Re-setting MR28 OP[1] to zero will immediately start a calibration sequence, where all DRAM die sharing the ZQ resource will re-calibrate in a serial fashion. This enables rapid recalibration when exiting from DVFSQ-active mode where recalibration was not possible.

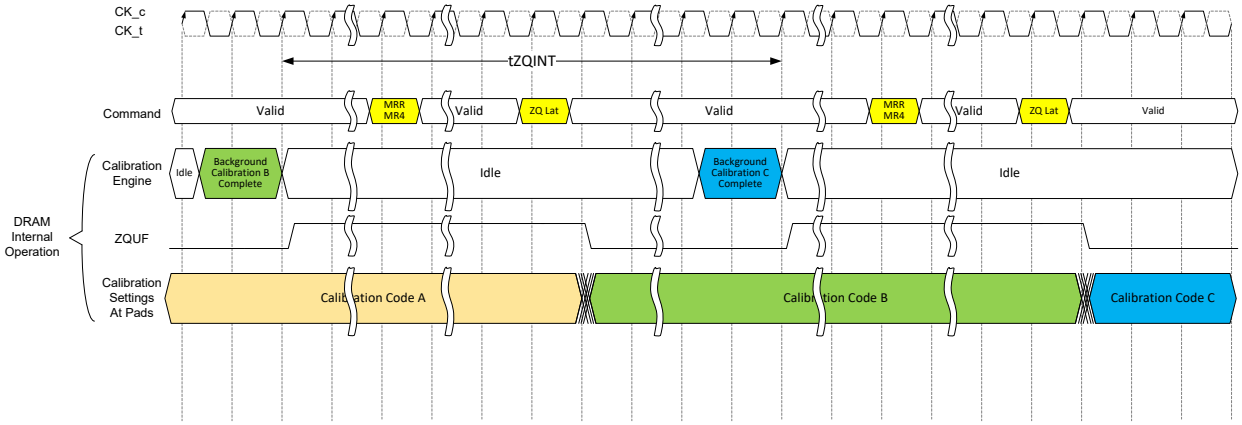

Figure 14 - Background ZQ Calibration Timing

4.2.1.1.2 Latching ZQ Calibration Results in Background Calibration Mode

Latching ZQ calibration results is accomplished with the MPC ZQCal Latch command. This command loads new calibration results into the pull-down/ODT devices and pull-up drivers.
A ZQCal Latch command may be issued anytime outside of power-down when there are no DQ operations pending or in progress. The results from the most-recently completed calibration will always be latched with each ZQCal Latch command. If CA ODT is enabled, the CA bus shall maintain a deselect state during tZQLAT to allow CA ODT calibration settings to be updated. In any case operations that initiate DQ operations are always dis-allowed during tZQLAT.
The DQ and CA ODT calibration values will not be updated until ZQCal Latch command is performed and tZQLAT has been met, with the following exceptions:

- ZQ calibration will automatically occur for each LPDDR5 die on power up/initialization and after Reset_n pin assertion. A ZQCal Latch command shall be issued to all LPDDR5 die on or after Tg.

When a ZQCal Latch command is executed the ZQUF bit will be reset to 0 before expiration of tZQLAT.

4.2.1.1.3 Command-Based Calibration

When Command-based calibration mode is selected, a ZQCal Start command may be periodically issued to the ZQ master die or dice in each DRAM package to maintain accurate calibration. ZQCal Start commands may only be issued when DVFSQ is not active. The memory controller may read MR4 OP[6] to determine which DRAM die in a package is designated as ZQ Master. The designation of ZQ Master is hard-coded by the DRAM vendor. ZQCal Start commands issued to DRAM die that are not designated ZQ Master will be ignored. When the ZQ master die is placed in powerdown or deep sleep mode, ZQCal Start commands will be ignored and re-calibration will not occur for all die sharing the ZQ resources. All die will be re-calibrated only when the ZQ master die exits powerdown or deep sleep mode and receives a subsequent ZQCal Start command.
When the ZQ Master die remains in an active mode and receives a valid ZQCal Start command, any slave die sharing ZQ resources that are in powerdown or deep sleep mode will also recalibrate normally. Systems where DRAM die sharing ZQ resources can operate in a mixed fashion (some die operating, some in powerdown or deep sleep mode) should note the ZQ master die designation when determining configuration if re-calibration will be required in mixed mode.

4.2.1.1.4 Latching ZQ Calibration Results in Command-Based Calibration Mode

In Command-based calibration mode, following a ZQCal Start command a ZQCal Latch command should be issued to each die after tZQCAL4, tZQCAL8 or tZQCAL16 has been met. tZQCAL4 applies to LPDDR5 DRAM die where the ZQ resource is shared among four or fewer DRAM die. tZQCAL8 applies to LPDDR5 DRAM die where the ZQ resource is shared among four and up to eight DRAM die. tZQCAL16 applies to LPDDR5 DRAM die where the ZQ resource is shared among more than eight DRAM die, up to the maximum of sixteen (NZQ). The ZQCal Latch command will load the most recent calibration results to the LPDDR5 output driver and ODT devices. In cases where the correct tZQCAL4, tZQCAL8, or tZQCAL16 delay time is not met, the LPDDR5 DRAM may latch a previous valid calibration result but in no case shall latch an invalid result. As in background calibration mode, a ZQCal Latch command may be issued anytime outside of power-down when there are no DQ operations pending or in progress. The value of ZQUF is undefined when Command-Based Calibration mode has been selected.

If CA ODT is enabled, the CA bus shall maintain a deselect state during tZQLAT to allow CA ODT calibration settings to be updated. In any case operations that initiate DQ operations are always dis-allowed during tZQLAT.

The DQ and CA ODT calibration values will not be updated until ZQCal Latch is performed and tZQLAT has been met, with the following exceptions:

- ZQ calibration will automatically occur for each LPDDR5 die on power up/initialization and after Reset_n pin assertion. A ZQCal Latch command shall be issued to all LPDDR5 die on or after Tg.

4.2.1.1.5 Maintaining Accurate Calibration - Background Calibration Mode

To maintain Pull-down/ODT calibration and Voh calibration when DVFSQ is not active:

1. Periodically, based on tZQINT, issue an MRR to MR4 to check the ZQUF OP[5] bit status for each LPDDR5 die.
2. If MR4 OP[5]=1, issue a ZQCal Latch command.

Repeat 1-2 as needed. Alternatively the memory controller may choose not to monitor ZQUF and periodically issue ZQCal Latch commands. In this case the most-recently-completed calibration results will always be latched, and will be no older than tZQINT.

It may be permissible for the memory controller to ignore ZQUF and not issue ZQCal Latch commands if both of the following are true:

- CA ODT is disabled
- The LPDDR5 SDRAM is in an idle state, or in Self Refresh or Power Down mode

Re-calibration will still occur in the background to ensure accurate driver/ODT settings are available should they be needed. In this case the memory controller should ensure a ZQCal Latch command is performed prior to resuming data traffic if ZQUF is set.

When DVFSQ is active MR28 OP[1] ZQ Stop shall be set for each LPDDR5 die to ensure recalibrations are inhibited. When DVFSQ is no longer active ZQ Stop may be de-asserted, which will immediately begin a recalibration and enable subsequent periodic background calibrations. When the memory con-troller de-asserts ZQ Stop it shall reset MR28 OP[1] to zero for all die sharing the ZQ resource within 100ns as described in 4.2.1.2.2. The ZQUF will be updated and results from the recalibration can be latched after the appropriate tZQCAL time (tZQCAL4, tZQCAL8 or tZQCAL16) has been satisfied.

4.2.1.1.6 Maintaining Accurate Calibration - Command-Based Calibration Mode

To maintain Pull-down/ODT calibration and Voh calibration when DVFSQ is not active:

1. Periodically, as system conditions warrant, issue a ZQCal Start command to the ZQ Master die.
2. After expiration of the appropriate tZQCAL time (tZQCAL4, tZQCAL8 or tZQCAL16), issue a ZQCal Latch command to each die.

Repeat 1-2 as needed.

When DVFSQ is active no recalibration may be performed.

4.2.1.1.7 Changing between Calibration Modes

Changing between calibration modes may be performed anytime after powerup and initialization time Tf when the device is not in power-down or deep sleep mode.

4.2.1.1.7.1 Changing between Calibration Modes when DVFSQ is not active

To change from Background Calibration Mode to Command-Based Calibration mode for all die sharing a ZQ resource when DVFSQ is not active:

1. Write the ZQ Master die MR28 OP[5] = 1B. MR28 OP[5] may also be updated on ZQ Slave die but it is not required as this bit is ignored by the LPDDR5 ZQ Slave die.
2. Wait tZQCALx
3. Begin to issue ZQCal Start commands to the ZQ Master die and subsequent ZQ Latch commands to all die to begin periodic command-based calibration as described in section 4.2.1.1.6.

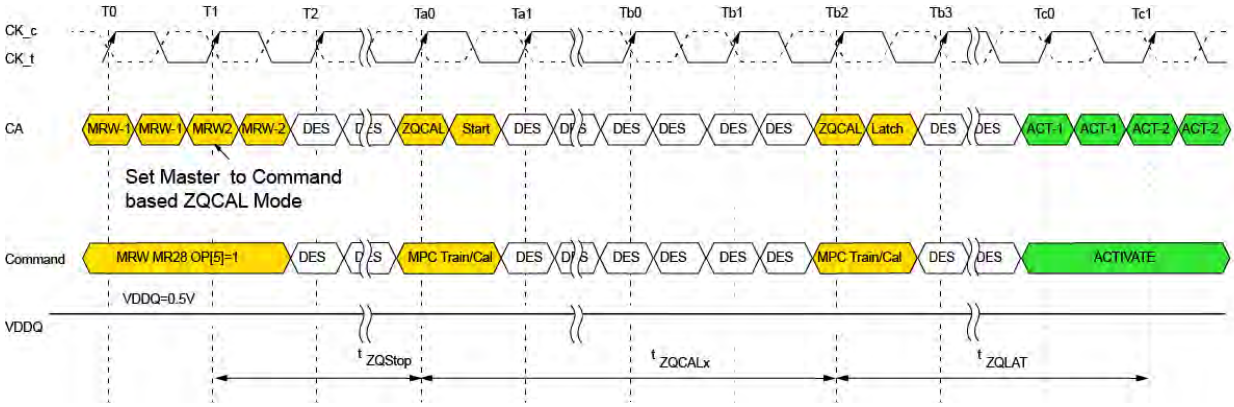

Figure 15 - Background to Command-based Switching when DVFSQ is not active

To change from Command-Based Calibration mode to Background Calibration mode for all die sharing a ZQ resource when DVFSQ is not active:

1. Ensure tZQCALx has been met from any previous ZQCal Start command.
2. Write the ZQ Master die MR28 OP[5] = 0B. MR28 OP[5] may also be set to 0B on ZQ Slave die if desired.
3. Issue ZQCal Latch commands as described in Section 4.2.1.1.5.

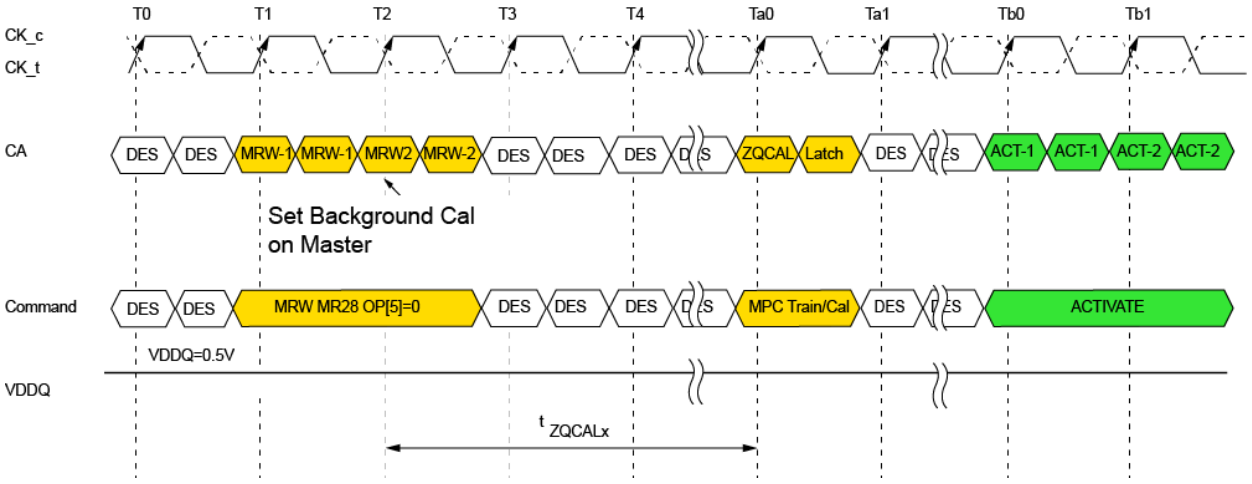

Figure 16 - Command=based to Background Switching when DVFSQ is not active

4.2.1.1.7.2 Changing between Calibration Modes when DVFSQ is active

To change from Background Calibration Mode to Command-Based Calibration mode for all die sharing a ZQ resource when DVFSQ is active:

1. Write the ZQ Master die MR28 OP[5] = 1_B. MR28 may also be updated on ZQ Slave die but it is not required as this bit is ignored by the LPDDR5 ZQ Slave die.
2. MR28 OP[1] ZQ Stop shall be written to 0_B for all die sharing the ZQ resource. This may occur simultaneously with the write to MR28 OP[5], or at any time at least tZQSTOP before a ZQCal Start command may be issued to the ZQ Master die (when DVFSQ is no longer active).

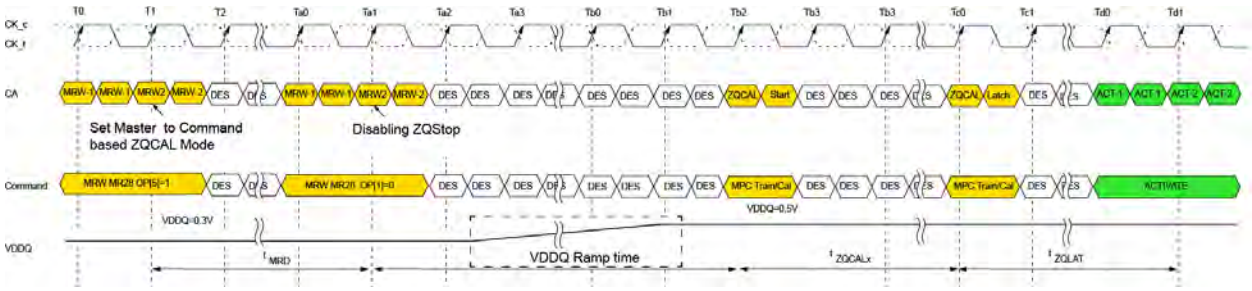

Figure 17 - Background to Command-based Switching when DVFSQ is active

To change from Command-Based Calibration mode to Background Calibration mode for all die sharing a ZQ resource when DVFSQ is active:

1. Write all ZQ Slave die MR28 OP[1] = 1_B.
2. Write the ZQ Master die MR28 OP[5] = 0_B and MR28 OP[1] = 1_B. These writes should occur simultaneously - if not simultaneously MR28 OP[1] shall be written first.
3. After DVFSQ is no longer active MR28 OP[1] shall be written to 0_B for all die sharing the ZQ resource.

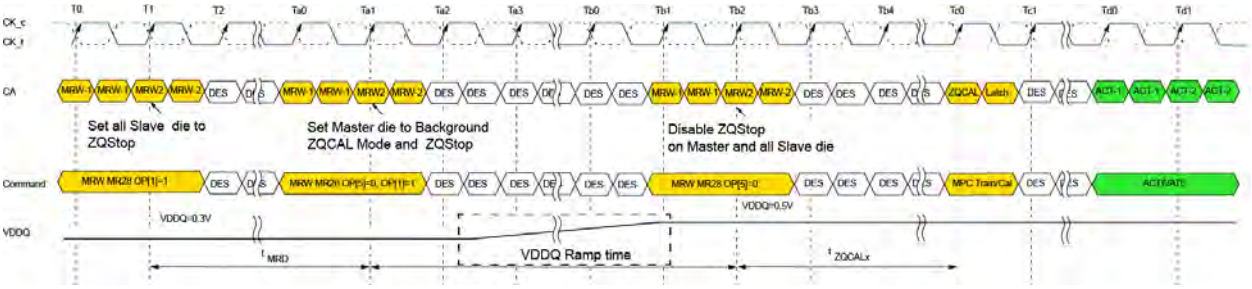

Figure 18 - Command=based to Background Switching when DVFSQ is active

4.2.1.2 ZQ Stop Functionality

4.2.1.2.1 ZQ Resistor Sharing by Other Device(s)

4.2.1.2.1.1 ZQ Resistor Sharing in Background Calibration Mode

In Background Calibration mode, a ZQ Stop function is provided to enable another device or devices to share the ZQ resistor. This function is enabled by MR28 OP[1]=ZQ Stop. When another device needs use of the ZQ resistor, MR28 OP[1] shall be set to 1 for all LPDDR5 devices that share ZQ resources. This will halt background calibration operations within delay time tZQSTOP (see Table 22) for each LPDDR5 device. Once tZQSTOP has expired for all LPDDR5 devices that share the ZQ resource another device may use the resource. When the ZQ resource is no longer needed by the other device or devices the ZQ Stop MR bit should be reset to 0 to allow background calibrations to continue normally. When the ZQ Stop MR bit is reset to 0 periodic background calibrations will be re-started.
Since ZQ Stop inhibits the LPDDR5 devices from recalibrating, note that changing system conditions while the ZQ Stop MR bit is set may cause the LPDDR5 ZQ calibration accuracy to deviate from specification. To ensure continued accurate calibration as discussed in sections 4.2.1.1.5 and 4.2.1.1.6 the ZQ Stop MR bit shall not be set for longer than tZQINT when set to background calibration mode, or the normal application-specific ZQCal Start command interval when set to command-based calibration mode.

4.2.1.2.1.2 ZQ Resistor Sharing in Command-Based Calibration Mode

In command-based calibration mode, ZQCal Start commands shall not be issued to the ZQ master die while the ZQ resistor is being used by any other device unless the ZQ Stop is set. The memory control-ler shall ensure tZQCAL4, tZQCAL8 or tZQCAL16 from the most-recent ZQCal Start command has been met before allowing any device to use the ZQ resistor unless the ZQ Stop bit is set. The LPDDR5 device will ignore ZQCal Start commands received when MR28 OP[1] ZQ Stop is set to 1_B.

4.2.1.2.2 Stopping Background Calibration when DVFSQ is active

In Background Calibration mode, the calibration shall be halted by setting ZQ Stop before DVFSQ is entered. ZQ Stop may be reset to 0 when DVFSQ is no longer active (when VDDQ is returned to a 0.5v nominal level). Resetting of ZQ Stop will start background calibration(s) immediately. After expiration of the appropriate tZQCAL time (tZQCAL4, tZQCAL8 or tZQCAL16) from resetting of ZQ Stop on the ZQ Master die, the memory controller may check the ZQUF flags, or may issue a ZQCal Latch command to all die sharing the ZQ resource. To guarantee recalibration of all die sharing the ZQ resource within tZQCAL, the MR28 OP[1] ZQ Stop bit shall be reset for all slave die sharing the ZQ resource either be-fore, or no later than 100ns after, the MR28 OP[1] ZQ Stop bit is reset on the ZQ master die.

4.2.1.2.3 Stopping Background Calibration when VDDQ is Powered Off

In Background Calibration mode, before entering Power-down mode, the calibration shall be halted by setting ZQ Stop when VDDQ is going to be powered off. When Power-down mode is exited ZQ Stop should be reset to 0 to re-enable background calibration. Resetting of ZQ Stop on the ZQ Master die will start background calibration(s) immediately. After expiration of the appropriate tZQCAL time (tZQCAL4, tZQCAL8 or tZQCAL16) from resetting of ZQ Stop, the memory controller may check the ZQUF flags, or may issue a ZQCal Latch command to each die sharing the ZQ resource. To guarantee recalibration of all die sharing the ZQ resource within tZQCAL, the MR28 OP[1] ZQ Stop bit shall be reset for all slave die sharing the ZQ resource either before, or no later than 100ns after, the MR28 OP[1] ZQ Stop bit is reset on the ZQ master die.

Table 22 - ZQ Calibration Timing Parameters

Parameter	Symbol	Min/Max	Value	Units
ZQ Calibration Command to Latch Time, NZQ≤4	tZQCAL4	Min	1.5	us
ZQ Calibration Command to Latch Time, 4<NZQ≤8	tZQCAL8	Min	3	us
ZQ Calibration Command to Latch Time, NZQ 8<NZQ≤16	tZQCAL16	Min	6	us
ZQ Calibration Latch Time	tZQLAT	Min	MAX(30ns,4nCK)	ns
ZQ Calibration Reset Time	tZQRESET	Min	MAX(50ns,3nCK)	ns
Delay Time from ZQ Stop Bit Set to ZQ Resistor Available	tZQSTOP	Max	30	ns
Background Calibration Interval	tZQINT	Max	Programmable, 32, 64, 128, or 256	ms
Maximum Number of LPDDR5 Devices (die) Connected to a Single ZQ Resistor	NZQ	Max	16	Die
Maximum Capacitive Load on ZQ Network	CZQ	Max	TBD	pF

4.2.1.3 ZQ Reset

Setting the ZQ Reset MR bit resets the output impedance calibration to a default accuracy of ±30% across process, voltage, and temperature. The ZQ Reset command is executed by writing MR28-OP[0] = 1b. The ZQ Reset command will also reset the ZQ Stop MR28 OP[1] and ZQUF MR4 OP[5] bits to 0. ZQ Reset will not change the state of the ZQ Mode or ZQ Interval MR bits MR28 OP[5] or OP[3:2]. If CA ODT is enabled, the CA bus shall maintain a deselect state during tZQRESET to allow CA ODT calibration settings to be updated. In any case operations that initiate DQ operations are always dis-allowed during tZQRESET. The ZQ Reset MR bit shall be reset to 0b by the DRAM after tZQRESET. To reset the ODT and output impedance in a multi-die package the ZQ Reset function shall be issued to all die regardless of ZQ Master or ZQ Slave designation.

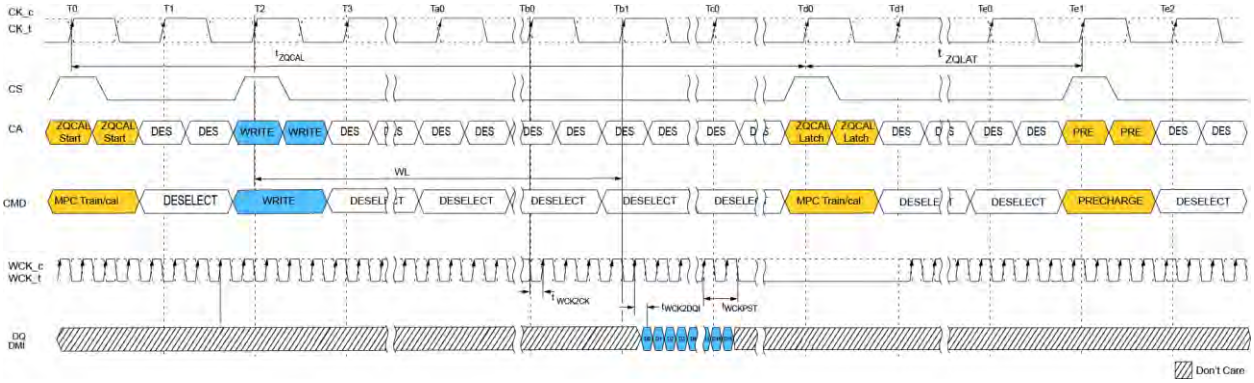

Figure 19 - ZQCal Timing

NOTE 1 WRITE and PRECHARGE operations are shown for illustrative purposes. Any single or multiple valid commands may be executed within the tZQCAL time and prior to latching the results.

NOTE 2 Before the ZQCal Latch command can be executed, any prior commands that utilize the DQ bus shall have completed.
WRITE commands with DQ termination shall be given enough time to turn off the DQ ODT before issu-ing the ZQCal Latch command. See the ODT section for ODT timing.

4.2.1.4 Multi-die Package Considerations

Up to NZQ LPDDR5 devices within a single package may connect to the same ZQ resistor. ZQCal Start commands (when in command-based calibration mode) are required for the master die and may be issued to other memory die sharing a ZQ resource asynchronously or simultaneously. ZQCal Start commands to non-master die are ignored. ZQCal Latch commands, when required, are necessary for each die. When multiple die share a ZQ resource and a ZQ master die is managing calibration (when DVFSQ is inactive, either in background mode or by accepting ZQCal Start commands), the MR28 OP[1] ZQ Stop bit shall be set to 0B for all ZQ slave die sharing the ZQ resource. No other arbitration considerations are required.

4.2.1.4.1 Other Considerations in Background Calibration Mode

Each LPDDR5 die includes a single ZQ pin and associated ZQ calibration circuitry. Calibration values from this circuit will be generated and used according to the following protocol:

- Setting of the ZQ Stop bit always has priority over background calibration processes
- If the ZQ Stop MR bit is set to 1 while a background ZQ calibration is in progress, the background calibration will be interrupted
- A background calibration will start immediately when the ZQ Stop MR bit is reset to 0
- A background calibration will not start while the ZQ Stop MR bit is set to 1
- The ZQUF bit will not be reset by setting of the ZQ Stop bit to 1
- The ZQUF bit will be reset only by a ZQCal Latch command or ZQ Reset
- The ZQUF bit will be set if calibration codes do not match the currently latched codes even when the device is in Self-refresh or Power-down mode, providing ZQ Stop is not set

4.2.1.4.2 Other Considerations in Command-Based Calibration Mode

Packages include one or more ZQ pin(s) and associated ZQ calibration circuitry. Calibration values from this circuit or circuits will be generated and used according to the following protocol:

- ZQCal Latch commands that do not meet the corresponding tZQCAL4, tZQCAL8 or tZQCAL16 may latch the results of the previous most recently completed ZQ calibration

4.2.1.5 ZQ External Resistor, Tolerance, and Capacitive Loading

To use the ZQ calibration function, a 240 ohm, ±1% tolerance external resistor shall be connected between the ZQ pin and VDDQ.
The total capacitive loading on the ZQ pin shall be limited to CZQ.

4.2.1.6 Flow Chart Examples

These example flow charts are representative only of one set of LPDDR5 die that share a single ZQ resource. These are examples only, there may be other valid methods of operation.

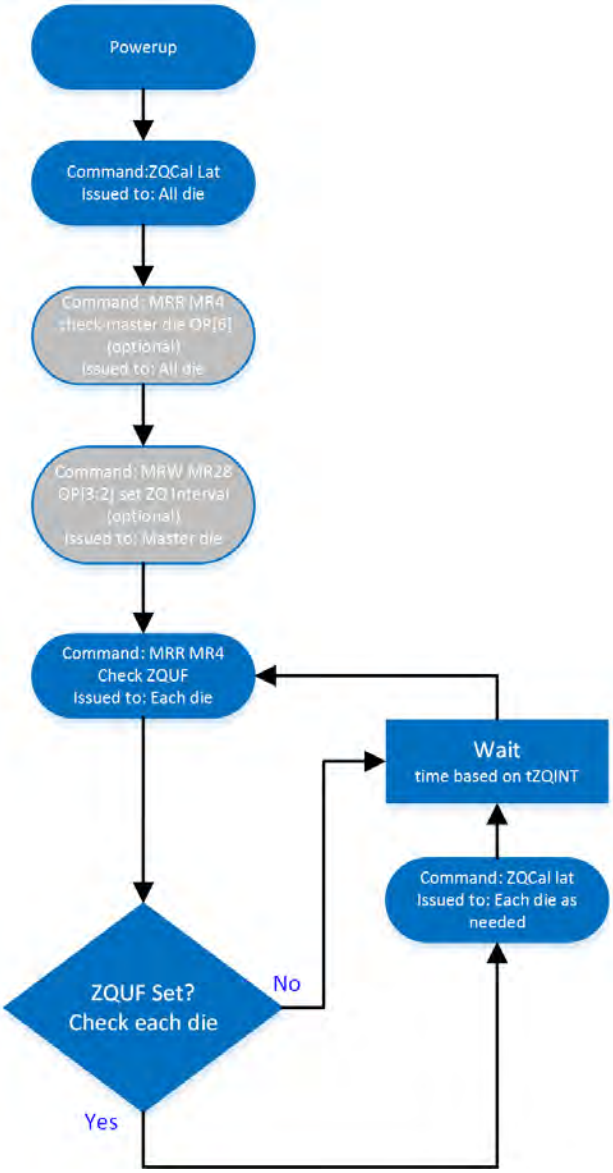

Figure 20 - Initialization to Background Calibration Flow Chart, no DVFSQ support

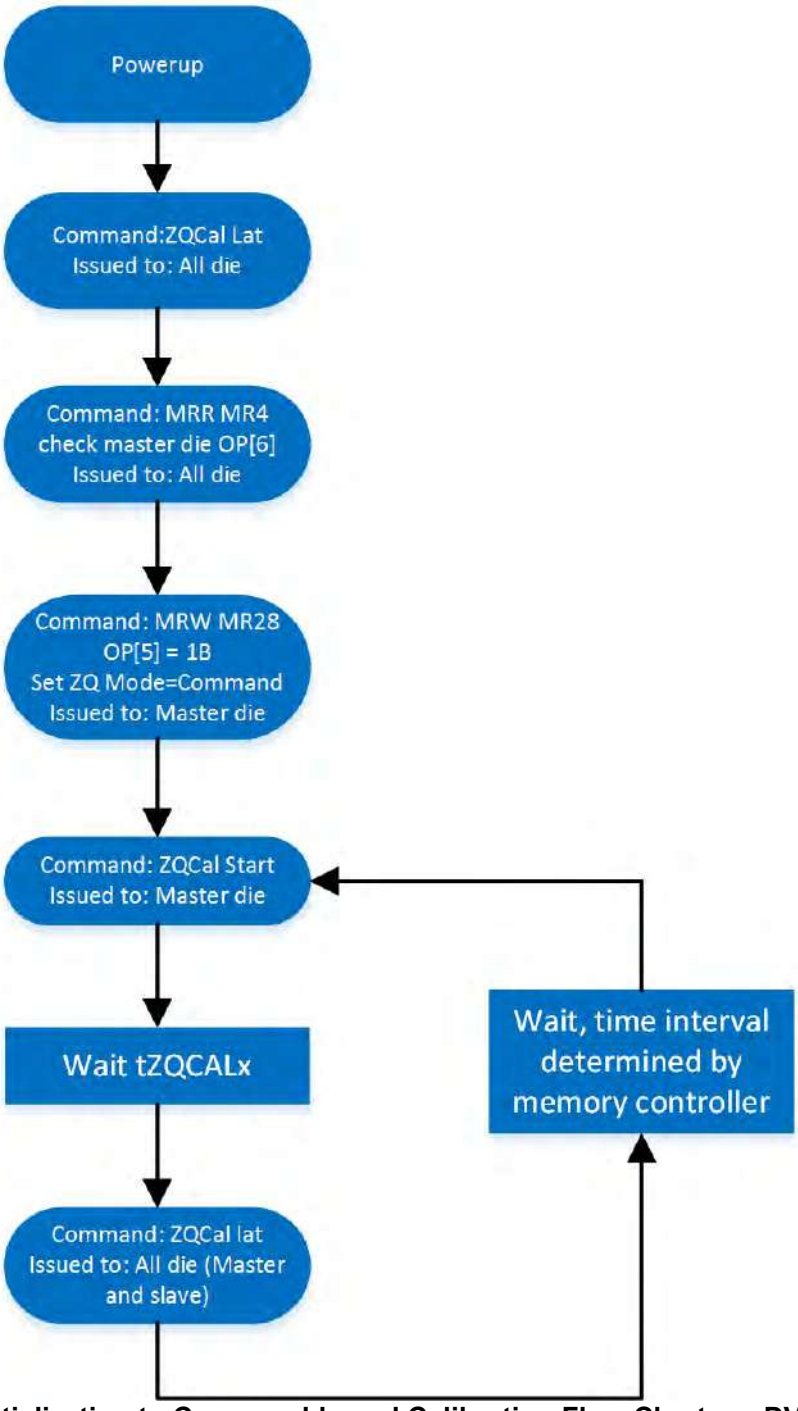

Figure 21 - Initialization to Command-based Calibration Flow Chart, no DVFSQ support, option 1 (check Master)

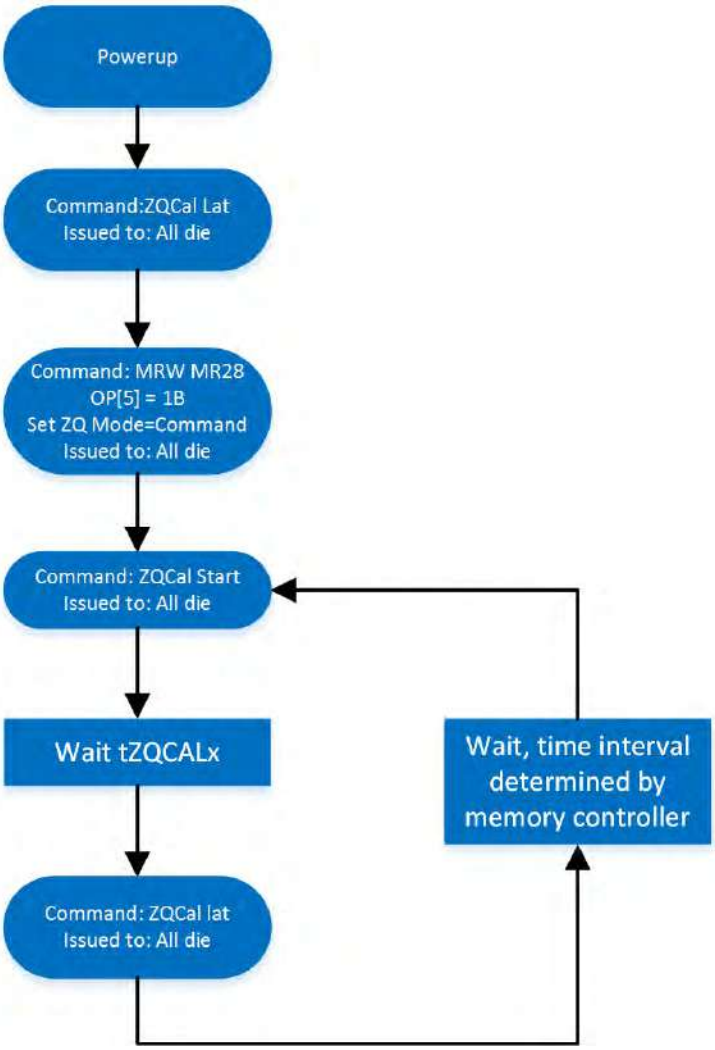

Figure 22 - Initialization to Command-based Calibration Flow Chart, no DVFSQ support, option 2 (ignore Master)

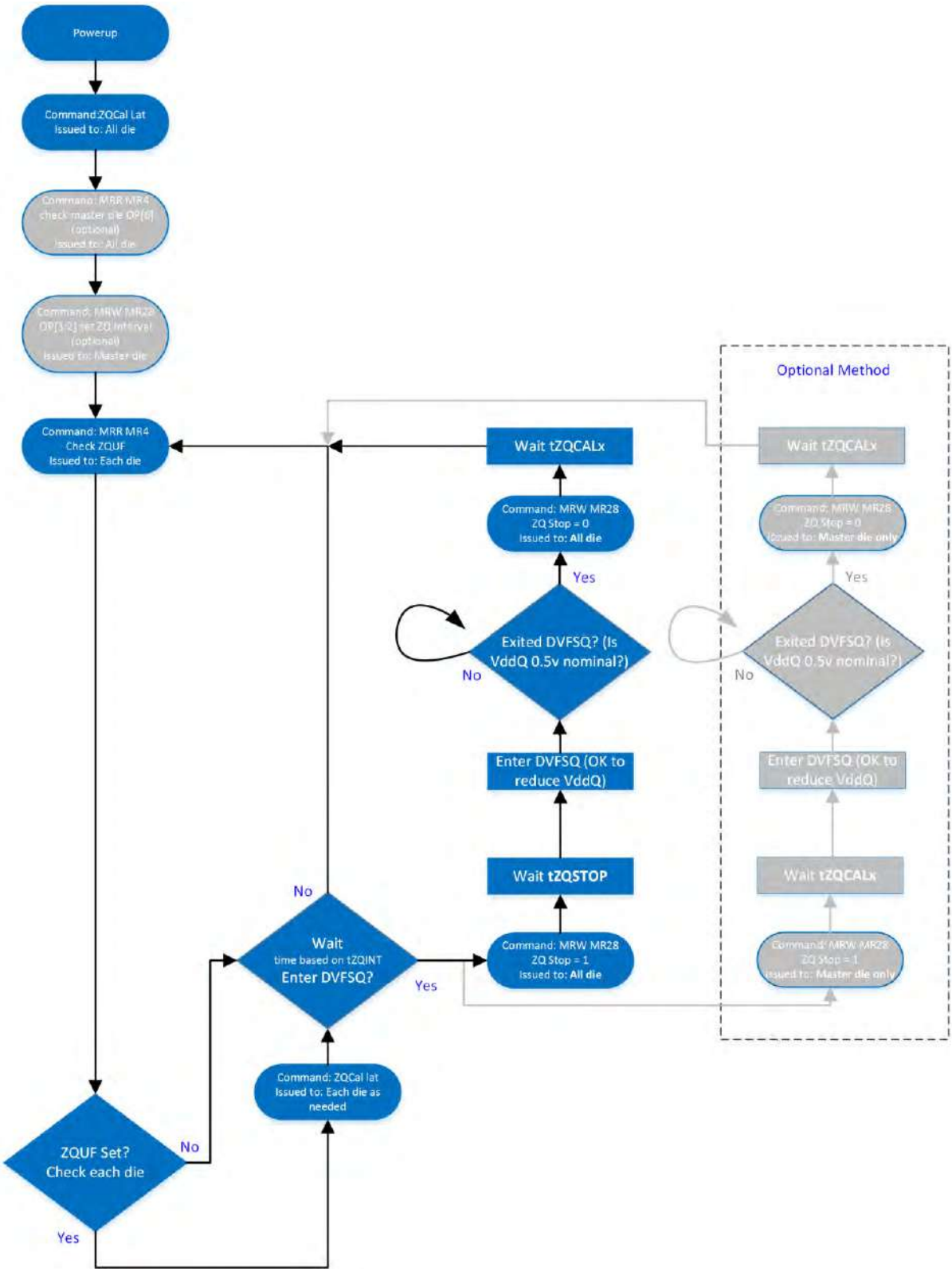

Figure 23 - Initialization to Background Calibration Flow Chart, with DVFSQ support

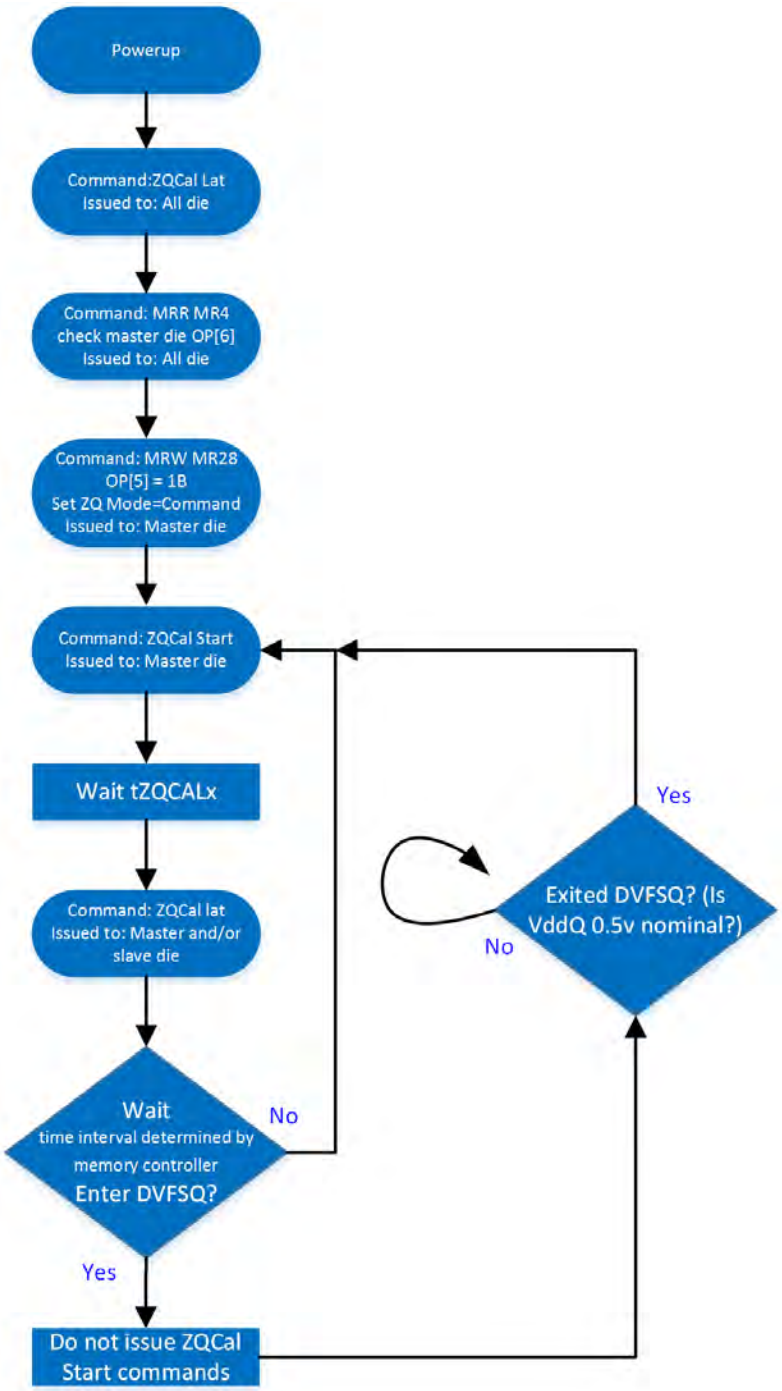

Figure 24 - Initialization to Command-based Calibration Flow Chart, with DVFSQ support

4.2.1 Command Bus Training

The LPDDR5 SDRAM command bus must be trained before enabling termination for high-frequency or mid-frequency operation. LPDDR5 SDRAM provides an internal VREF(CA) that default level is suitable for un-terminated, low-frequency operation, however the VREF(CA) must be trained to achieve suitable receiver voltage margin for terminated, high-frequency or mid-frequency operation. The training mode described here centers the internal VREF(CA) in the CA data eye and at the same time allows for timing adjustments of the CS and CA signals to meet their Rx Mask requirements. For the training sequence simplicity and difficulty to capture CA inputs prior to training the CA inputs, the training mode described here uses a minimum of external commands to enter, train, and exit the Command Bus Training.
Once LPDDR5 SDRAM has entered CBT mode by MRW, only DES and MRW for exiting CBT mode are allowed.
The LPDDR5 SDRAM supports two Command Bus Training modes and their feature is as follows. CBT mode is selected by MR13 OP[6] (CBT mode1: MR13 OP[6] = 0_B, CBT mode2: MR13 OP[6] =1_B)
In multi-rank/channel system sharing the CA bus, the terminated die should be trained first, followed by the nonterminated die(s). See the ODT section for more information. About WCK ODT setting in multi-rank/channel system, only one of SDRAM connected to a common WCK signal can set to CBT mode, the MR of Non CBT trained SDRAM(s) is required to be set MR18 OP[2:0]=000_B.
The Corresponding DQ pins in this definition may differ depending on the package configuration. For example, in case of a package which contains Byte-mode devices, DQ[15:8] and DMI[1] balls can be connected to DQ[7:0] and DMI[0] pads of byte-mode device.

4.2.1.1 Three physical Mode Register

LPDDR5 SDRAM has three physical mode registers to reduce MR setting time at changing operating frequency. Active or inactive of mode register is chosen by MR16 OP[3:2]: FSP-OP (Frequency Set Point Operation Mode). Settings that can be specified in MR16 OP[3:2] is FSP-OP[0], FSP-OP[1] and FSP-OP[2].

Table 23 - Relation between MR16 OP[3:2] Setting and Physical Register Number

MR16 OP[3:2] FSP-OP	Symbol	Physical Mode Register Number		
		0	1	2
00_B	FSP-OP[0]	Active	Non-active	Non-active
01_B	FSP-OP[1]	Non-active	Active	Non-active
10_B	FSP-OP[2]	Non-active	Non-active	Active

And enabling Write/Read to each mode register is selected by MR16 OP[1:0] FSP-WR (Frequency Set Point Write/Read Enable). MR data can be read/written from/to the selected mode register by FSP-WR.

Table 24 - Relation between MR16 OP[1:0] Setting and Physical Register Number

MR16 OP[1:0] FSP-WR	Symbol	Physical Register Number		
		0	1	2
00_B	FSP-WR[0]	Writable/Readable	-	-
01_B	FSP-WR[1]	-	Writable/Readable	-
10_B	FSP-WR[2]	-	-	Writable/Readable

The FSP-OP and FSP-WR functions operate completely independently.

4.2.1.2 Command Bus Training Mode1

The LPDDR5 SDRAM uses Frequency Set Points to enable multiple operating settings for the die. The LPDDR5 SDRAM is initiated to FSP-OP[0] at power-up, which has the default settings to operate in unterminated, low-frequency environments. Prior to training, the mode register settings should be configured by setting MR16 OP[1:0] for FSP-WR (Frequency Set Point Write/Read Enable), setting all other mode register bits for FSP-OP (Frequency Set Point Operation Mode) to make the desired settings for high-frequency or mid-frequency operation, and setting MR16 OP[5:4] for Command Bus Training Mode selection.
Prior to entering Command Bus Training, the LPDDR5 SDRAM will be operating from FSP-OP[x]. Upon Command Bus Training entry when DQ[7] is driven HIGH, the LPDDR5 SDRAM will automatically switch to the active FSP register set FSP-OP[x], FSP-OP[y] or FSP-OP[z] according to MR16 OP[5:4] and use the active register settings during training. Upon Command Bus Training exit when DQ[7] is driven LOW, the LPDDR5 SDRAM will automatically switch back to the original FSP register set FSP-OP[x], returning to the “known-good” state that was operating prior to training.
LPDDR5 SDRAM can select the Command Bus Training CA phase by MR16 OP[7] setting. If MR16 OP[7] = 0_B, DQ outputs CA pattern latched by CK_t rising edge. If MR16 OP[7] =1_B, DQ outputs CA pattern latched by CK_t falling edge.
Differential WCK input is needed during CBT mode. Hence MR20 OP[3:2] is required to set 00_B to both FSP set which use CBT training prior to entering CBT mode. In addition, VRCG shall be turned on during CBT mode with DVFSQ.

1) Set MR13 OP[6]=0_B for Command Bus Training Mode1.
2) To enter Command Bus Training mode, issue a MRW-1 command followed by a MRW-2 command to set MR16 OP[5:4] for the CBT mode selection. WCK ODT value is fixed 40ohm regardless of MR18 setting and DQ ODT and NT-ODT state are off during CBT mode. WCK input is required to be valid level (WCK_t = Low and WCK_c = High) and DQ7 is required to be low before MRW-2 command input. After tCBTWCKPRE_static, WCK signal can be toggling. tWCK2DQ7H is required to satisfy before DQ7 goes high.
3) DQ[7] is driven HIGH and when LPDDR5 SDRAM samples HIGH level of DQ[7] by WCK, the LPDDR5 SDRAM switches from FSP-OP[x] to FSP set defined by MR16 OP[5:4] completing the entry into Command Bus Training mode. In this case, WCK doesn't need to synchronize clock (CK) signal. After tDQ7HWCK, WCK can be valid level (WCK_t = Low and WCK_c = High) or changed WCK frequency.
4) At time tCAENT later, LPDDR5 SDRAM can accept to input CA training pattern via CA bus.
5) To verify that the receiver has the correct VREF(CA) setting and to further train the CA eye relative to clock(CK), values latched at the receiver on the CA bus are asynchronously output to the DQ bus.
6) To exit Command Bus Training mode, drive DQ[7] LOW and after time tDQ7LWCK + tVREFCA_LONG issue the MRW command to set MR16 OP[5:4] = 00_B. After time tMRD the LPDDR5 SDRAM is ready for normal operation. After training exit, the LPDDR5 SDRAM will automatically switch back to the FSP-OP registers that were in use prior to training.

Command Bus Training may be entered from IDLE or Self Refresh states. When entering CBT, the SDRAM must not be a Power Down state or Deep Sleep Mode. Command Bus Training entry and exit is the same, regardless of the SDRAM state from which CBT is initiated.

Table 25 - Mapping of CA Input pin and DQ Output pin

Mapping							
CA Number	CA6	CA5	CA4	CA3	CA2	CA1	CA0
DQ Number	DQ6	DQ5	DQ4	DQ3	DQ2	DQ1	DQ0

Training Sequence for single-rank systems

Note that an example shown here is assuming an initial low-frequency, un-termination operating point, training a high-frequency or a mid-frequency, termination operating point. The blue text is low-frequency, the red text is high-frequency. Any operating point may be trained from any known good operating point. This example is assuming on the following condition. Frequency Set Point “X” for low frequency operation and Frequency Set Point “Y” for high frequency operation.

1) Set MR16 OP[1:0] to enable writing to Frequency Set Point “Y” (FSP-WR[y]).
2) Write FSP-WR[y] registers for all channels to set up high frequency operating parameters.
3) Set MR16 OP[5:4] to select CBT mode (CBT[y]).
4) Issue MRW-1 and MRW-2 commands to enter Command Bus Training mode.
5) Drive DQ[7] HIGH, and then change CK frequency to the high frequency operating point.
6) Perform Command Bus Training (CS and CA).
7) Exit training by driving DQ[7] LOW, a change CK frequency to the low frequency operating point prior to driving DQ[7] Low, and then issue MRW-1 and MRW-2 commands to exit Command Bus Training mode. When DQ[7] is driven LOW and SDRAM samples the LOW level of DQ[7] by WCK, the SDRAM will automatically switch back to the FSP-OP registers that were in use prior to training.
8) Write the trained values to FSP-WR[y] by issuing MRW-1 and MRW-2 commands to the SDRAM and setting all applicable mode register parameters.
9) Issue MRW-1 and MRW-2 commands to switch to FSP-OP[y] to turn on termination, and change CK frequency to the high frequency operation point. At this point the Command Bus is trained and other training or normal operation can be executed.

Training Sequence for multi-rank systems

Note that an example shown here is assuming an initial low-frequency, un-termination operating point, training a high-frequency or a mid-frequency, termination operating point. The blue text is low-frequency, the red text is high-frequency. Any operating point may be trained from any known good operating point. This example is assuming on the following condition. Frequency Set Point "X" for low frequency operation and Frequency Set Point "Y" for high frequency operation. FSP-WR[x] and FSP-OP[x] are initial state for both terminated rank and non-terminated rank. WCK ODT and NT-ODT for both terminated rank and non-terminated rank are required to be disabled with both FSP-OP[x] and FSP-OP[y] prior to start the command bus training: WCK ODT: MR18 OP[2:0]=000_B, NT-ODT: MR11 OP[3]=0_B or MR41 OP[7:5]=000_B. The reason why recommended WCK ODT and NT-ODT setting to be disabled is that to ensure sufficient amplitude for WCK and DQ[7] input. Since these signal pins are applied several functions during CBT mode, controlling entering/exiting CBT mode and capturing DQ[7] input level, for example.

1) Set MR16 OP[1:0] to enable writing to Frequency Set Point "Y" (FSP-WR[y]) for both ranks.
2) Write FSP-WR[y] registers for all channels to set up high frequency operating parameters for both ranks.
3) Issue MRW-1 and MRW-2 commands to enter Command Bus Training mode (CBT[y]) on the terminating rank: Set MR16 OP[5:4] to select CBT mode (CBT[y]).
4) Drive DQ[7] HIGH on the terminating rank (or all ranks), and then change CK frequency to the high frequency operating point.
5) Perform Command Bus Training on the terminating rank (CS and CA).
6) A change CK frequency to the low frequency operating point, and then driving DQ[7] LOW on the terminating rank (or all ranks). When DQ[7] is driven LOW and SDRAM samples the LOW level of DQ[7] by WCK, the SDRAM will automatically switch back to the FSP-OP registers that were in use prior to training (i.e. trained values are not retained by the SDRAM)
7) Issue MRW-1 and MRW-2 commands to exit Command Bus Training mode (Normal Operation) on the terminating rank: Set MR16 OP[5:4] to select Normal Operation.
8) Write the trained values to FSP-WR[y] of the terminating rank by issuing MRW-1 and MRW-2 commands to the SDRAM and setting all applicable mode register parameters.
9) Issue MRW-1 and MRW-2 commands to enter Command Bus Training mode (CBT[y]) on the non-terminating rank: Set MR16 OP[5:4] to select CBT mode (CBT[y]). But, keep DQ[7] LOW.
10) Issue MRW-1 and MRW-2 commands to switch the terminating rank to FSP-OP[y] to turn on termination. and then change CK frequency to the high frequency operating point.
11) Drive DQ[7] HIGH on the non-terminating (or all) ranks. The non-terminating rank(s) will now be using FSP-OP[y].
12) Perform Command Bus Training on the non-terminating rank (CS and CA).
13) Issue MRW-1 and MRW-2 commands to switch the terminating rank to FSP-OP[x] to turn off termination.
14) Exit training by driving DQ[7] LOW on the non-terminating rank, change CK frequency to the low frequency operating point, and issue MRW-1 and MRW-2 commands to exit Command Bus Training mode. When DQ[7] is driven LOW and SDRAM samples the LOW level of DQ[7] by WCK, the SDRAM will automatically switch back to the FSP-OP registers that were in use prior to training.
15) Write the trained values of the non-terminating rank to FSP-WR[y] by issuing MRW-1 and MRW-2 commands to the SDRAM and setting all applicable mode register parameters.

16) Issue MRW-1 and MRW-2 commands to switch the terminating rank to FSP-OP[y] to turn on termination, and change CK frequency to the high frequency operation point. At this point the Command Bus is trained for both ranks and other training or normal operation can be executed.

The basic timing diagrams of Command Bus Training Mode1 are shown in following figures.

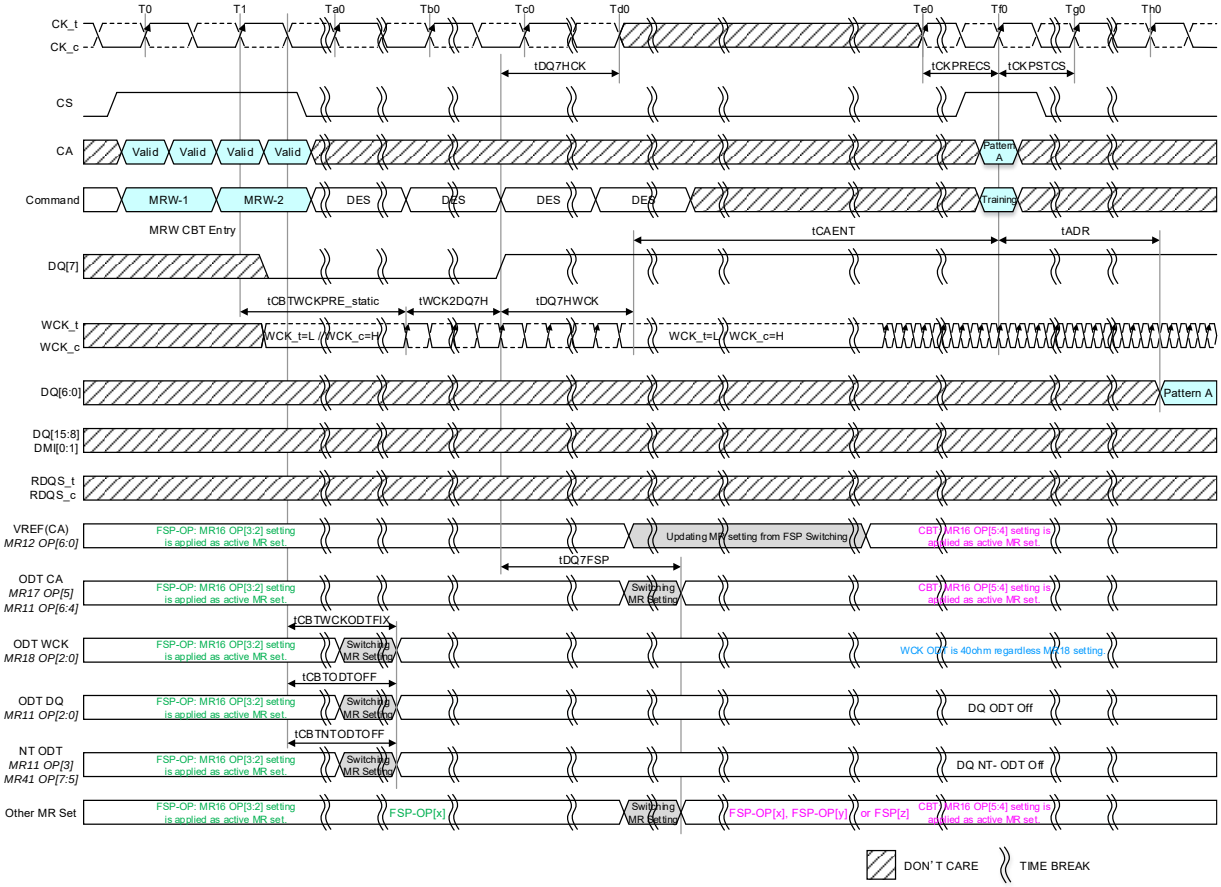

NOTE 1 After tDQ7HCK, clock (CK) can be stopped or frequency changed any time.
NOTE 2 The input clock condition should be satisfied tCKPRECS.
NOTE 3 Continue to drive CK and hold CS pins low until tDQ7HCK after DQ[7] goes HIGH.
NOTE 4 After DQ[7] is driven HIGH and the SDRAM samples the HIGH level of DQ[7] by WCK toggle in Command Bus Training mode, the SDRAM will switch its FSP-OP registers to use the alternate(i.e. non-active) set. Example: If the SDRAM is currently using FSP-OP[0], then it will switch to FSP-OP[1] when DQ[7] is driven HIGH and sampled HIGH level by WCK toggle. All operating parameters should be written to the alternate mode registers before entering Command Bus Training to ensure that ODT settings, RL/WL/nWR setting, etc., are set to the correct values. If the alternate FSP-OP has ODT CA disabled then termination will not enable in CA Bus Training mode.
NOTE 5 WCK ODT state is set to a fixed value and DQ ODT/NT-ODT are turned off during CBT operation.
NOTE 6 The same FSP and clock frequency may be used before and after Command Bus Training entry.
NOTE 7 CBT Phase: MR16 OP[7] = 0_B

Figure 25 - Entering Command Bus Training Mode and CA Training Pattern Input and Output (WCK Frequency change)

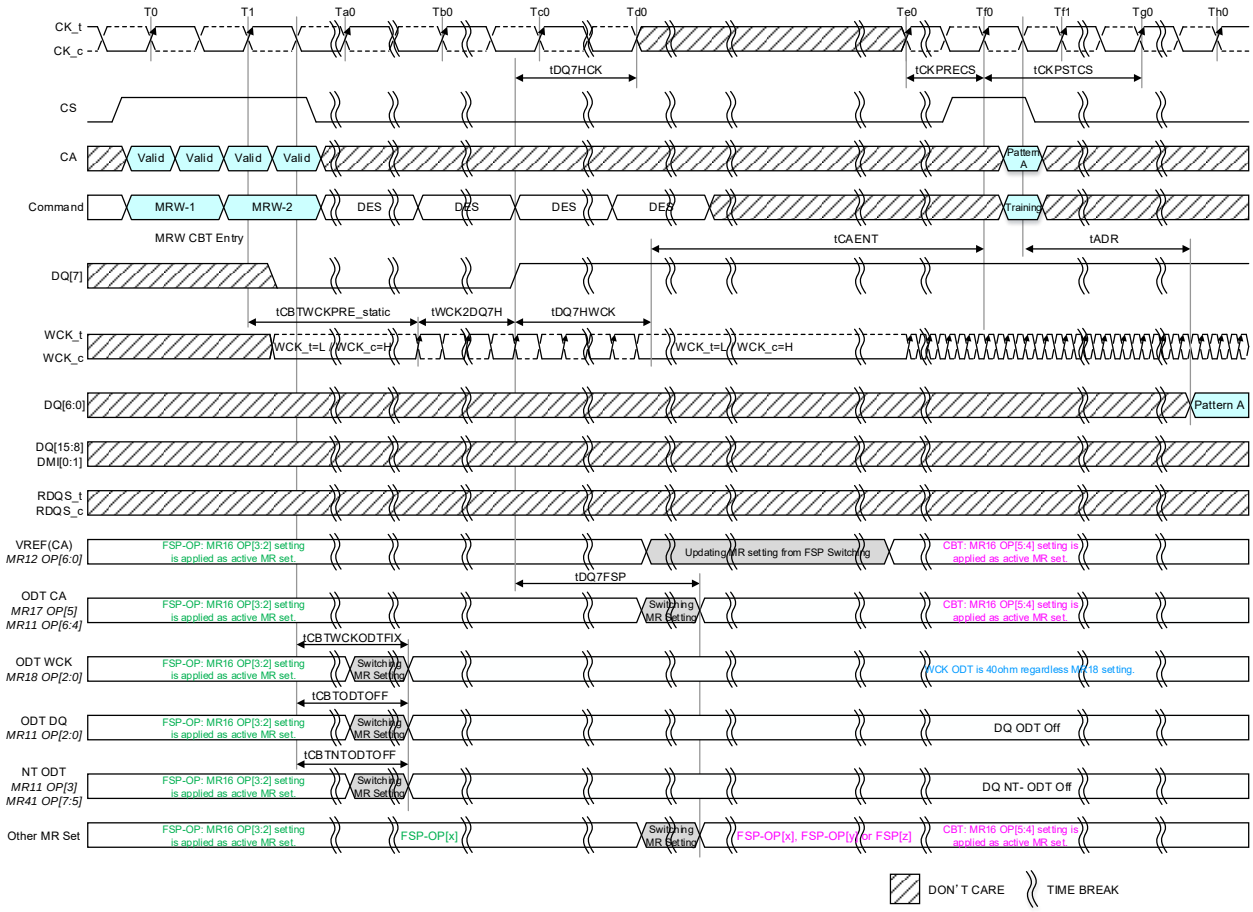

NOTE 1 After tDQ7HCK, clock (CK) can be stopped or frequency changed any time.

NOTE 2 The input clock condition should be satisfied tCKPRECS.

NOTE 3 Continue to drive CK and hold CS pins low until tDQ7HCK after DQ[7] goes HIGH.

NOTE 4 After DQ[7] is driven HIGH and the SDRAM samples the HIGH level of DQ[7] by WCK toggle in Command Bus Training mode, the SDRAM will switch its FSP-OP registers to use the alternate(i.e. non-active) set. Example: If the SDRAM is currently using FSP-OP[0], then it will switch to FSP-OP[1] when DQ[7] is driven HIGH and sampled HIGH level by WCK toggle. All operating parameters should be written to the alternate mode registers before entering Command Bus Training to ensure that ODT settings, RL/WL/nWR setting, etc., are set to the correct values. If the alternate FSP-OP has ODT CA disabled then termination will not enable in CA Bus Training mode.

NOTE 5 WCK ODT state is set to a fixed value and DQ ODT/NT-ODT are turned off during CBT operation.

NOTE 6 WCK frequency is don't care during CBT operation as far as the frequency is within the allowed range of each frequency mode (MR18 OP[3]). WCK toggle may stopped after tDQ7HWCK, but WCK pair should be driven at static levels (WCK_t/c = Low/High). WCK should toggle to satisfy tWCK2DQ7H before DQ[7] changes again.

NOTE 7 The same FSP and clock frequency may be used before and after Command Bus Training entry.

NOTE 8 CBT Phase: MR16 OP[7] = 1_B

Figure 26 - Entering Command Bus Training Mode and CA Training Pattern Input and Output (WCK Frequency change: Fall Edge Training)

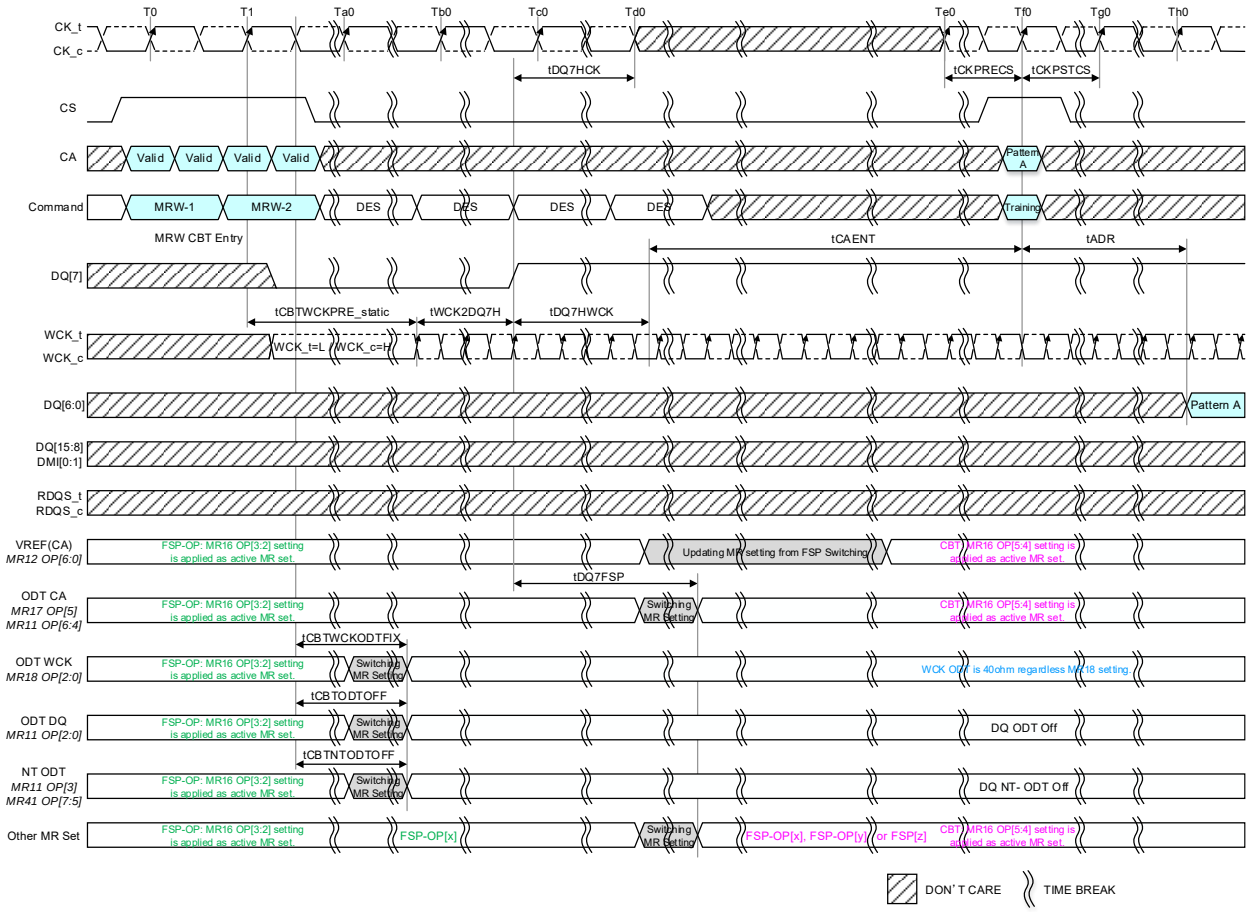

NOTE 1 After tDQ7HCK, clock (CK) can be stopped or frequency changed any time.

NOTE 2 The input clock condition should be satisfied tCKPRECS.

NOTE 3 Continue to drive CK and hold CS pins low until tDQ7HCK after DQ[7] goes HIGH.

NOTE 4 After DQ[7] is driven HIGH and the SDRAM samples the HIGH level of DQ[7] by WCK toggle in Command Bus Training mode, the SDRAM will switch its FSP-OP registers to use the alternate(i.e. non-active) set. Example: If the SDRAM is currently using FSP-OP[0], then it will switch to FSP-OP[1] when DQ[7] is driven HIGH and sampled HIGH level by WCK toggle. All operating parameters should be written to the alternate mode registers before entering Command Bus Training to ensure that ODT settings, RL/WL/nWR setting, etc., are set to the correct values. If the alternate FSP-OP has ODT CA disabled then termination will not enable in CA Bus Training mode.

NOTE 5 WCK ODT state is set to a fixed value and DQ ODT/NT-ODT are turned off during CBT operation.

NOTE 6 Set fixed WCK frequency during CBT operation regardless of CK:WCK ratio.
WCK frequency is don't care during CBT operation as far as the frequency is within the allowed range of each frequency mode (MR18 OP[3]).. WCK toggle may stopped after tDQ7HWCK, but WCK pair should be driven at static levels (WCK_t/c = Low/High). WCK should toggle to satisfy tWCK2DQ7H before DQ[7] changes again.

NOTE 7 The same FSP and clock frequency may be used before and after Command Bus Training entry.

NOTE 8 CBT Phase: MR16 OP[7] = 0_B

Figure 27 - Entering Command Bus Training Mode and CA Training Pattern Input and Output (Fixed WCK Frequency)

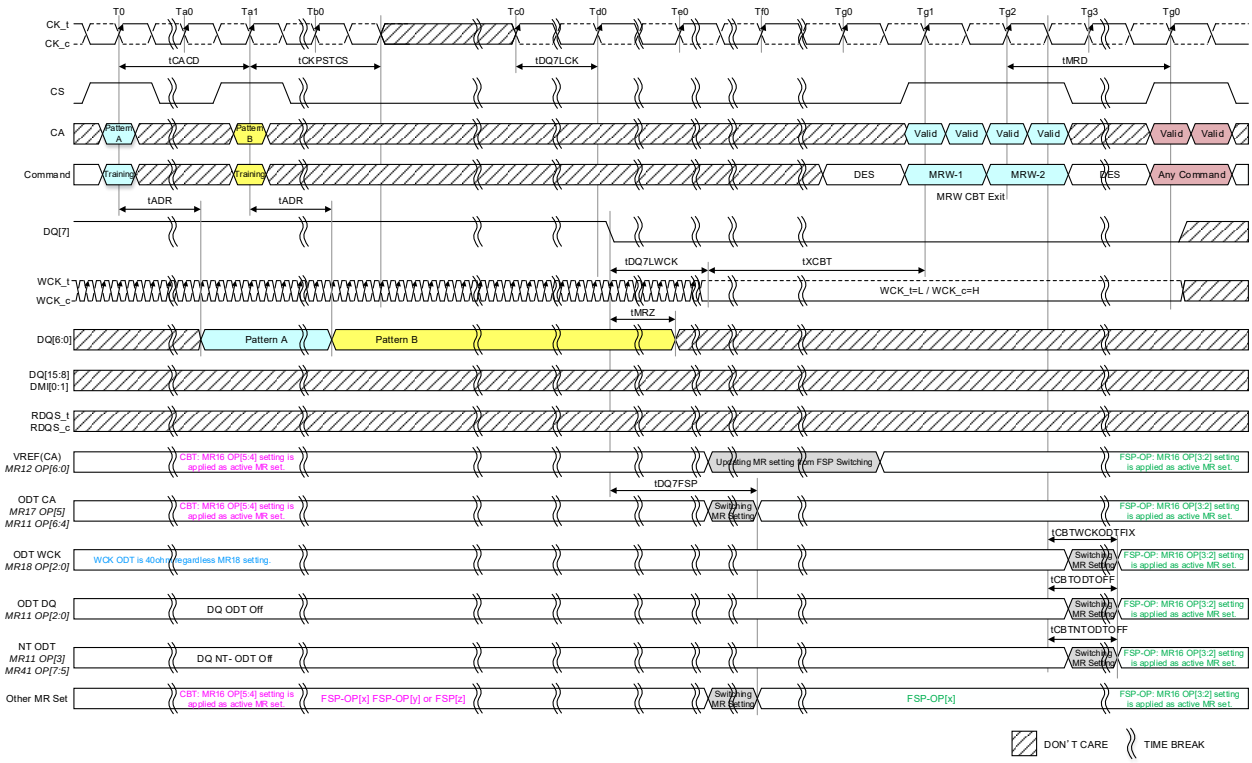

NOTE 1 CK is required to satisfy tDQ7LCK before DQ[7] is driven low.

NOTE 2 DQ[7] and WCK signal are required to be valid level until tMRD which is caused by MRW command to exiting this mode is satisfied.

NOTE 3 After DQ[7] is driven low and the SDRAM samples the LOW level of DQ[7] by WCK toggle, the SDRAM ODT_CA will revert to the state/value defined by FSP-OP prior to Command Bus Training mode entry, i.e. the original frequency set point (FSP-OP).
Example: If the SDRAM was using FSP-OP[x], FSP-OP[y] or FSP-OP[z] for training, then it will switch to FSP-OP[x] after DQ[7] is driven LOW and sampled LOW level by WCK toggle.

NOTE 4 WCK doesn't need to synchronize with clock signal during CBT mode.

Figure 28 – Consecutive CA input and Exiting Command Bus Training Mode

Table 26 - Command Bus Training AC Timing Table

Item	Symbol	Min/ Max	Data Rate (Mbps)												Unit	Notes
			533	1066	1600	2133	2750	3200	3733	4266	4800	5500	6000	6400		
Command Bus Training Timing																
Static WCK period (CBT entry to WCK toggling start)	tCBTWCKPRE_static	Min	Max(20ns, 2nCK)												ns	
Set-up margin between DQ7 and WCK	tWCK2DQ7H	Min	Max(5ns, 12nWCK)												ns	
Hold margin between DQ7 and WCK	tDQ7HWCK	Min	Max(5ns, 12nWCK)												ns	
Clock and Command Valid after DQ7 HIGH	tDQ7HCK	Min	Max(5ns, 3nCK)												ns	
ODT CA change latency after DQ7 HIGH	tDQ7FSP	Max	20												ns	
Valid Clock Requirement before CS High	tCKPRECS	Min	2tCK + tXP (tXP = Max(7.5ns, 3nCK))												ns	
Valid Clock Requirement after CS High	tCKPSTCS	Min	Max(7.5ns, 3nCK)												ns	
Delay time from DQ[7] High to CA Bus Training	tCAENT	Min	250												ns	
Asynchronous Data Read	tADR	Max	20												ns	
CA Bus Training Command to CA Bus Training Command delay	tCACD	Min	RU(tADR/tCK)												tCK	1
Valid Clock Requirement before DQ7 Low	tDQ7LCK	Min	Max(5ns, 3nCK)												ns	
DQ<7> Low to DQ driver off	tMRZ	Min	1.5												ns	
DQ7 Low to static WCK	tDQ7LWCK	Min	Max(5ns, 12nWCK)												ns	
Exit Command Bus Training Mode to next valid command delay	tXCBT	Min	Max(5nCK, 250ns)												ns	
Stable time for WCK ODT	tCBTWCKODTFIX	Max	20												ns	
Turned off time for DQ ODT	tCBTODTOFF	Max	20												ns	
Turn off time for NT-ODT	tCBTNTODTOFF	Max	20												ns	

NOTE 1 If tCACD is violated, the data for samples which violate tCACD will not be available, except for the last sample (where tCACD after this sample is met). Valid data for the last sample will be available after tADR.

4.2.1.3 Command Bus Training Mode1 (FSP with DVFSQ enable)

CBT for FSP with DVFSQ enable(MR19 OP3[3:2]=01_B), follow below steps.
This section will apply to SDRAM which supports DVFSQ function.
The red text is DVFSQ disabled mode, the blue text is DVFSQ enabled mode.

1) Set MR16 OP[1:0] to enable writing to Frequency Set Point “Y” (FSP-WR[y]).
2) Write FSP-WR[y] registers for all channels to set up DVFSQ enabled operating parameters.
3) Disable SoC ODT and set MRW MR17 OP[2:0]=000_B.
4) In case of Background ZQ calibration mode, issue MRW MR28 to set ZQ_STOP(MR28 OP[1]=1B) and Wait tZQSTOP.
5) Set to VRCG VREF High Current Mode: MR16 OP[6]=1_B and wait tVRCG Enable
6) Set MR16 OP[5:4] to select CBT mode (CBT[y]) by MRW-1 and MRW-2 commands: Entering CBT mode.
7) Drive DQ[7] HIGH, and then ramp VDDQ down to 0.3V nominal. (Do not TRAIN HERE!) For VDDQ slew rate, VDQSR1, refer to “DVFSQ mode” spec.
8) VREFCA update timing, tVREF_CA_long is required after the VDDQ ramp down is completed.
9) Perform Command Bus Training (CS and CA).
10) Before the CBT exit, ramp VDDQ up to 0.5V nominal. For VDDQ slew rate, VDQSR1, refer to “DVFSQ mode” spec. Change CK frequency to the FSP[x] frequency operating point prior to driving DQ[7] Low
11) Exit training by driving DQ[7] LOW. When DQ[7] is driven LOW and SDRAM samples the LOW level of DQ[7] by WCK, the SDRAM will automatically switch back to the FSP-OP registers that were in use prior to training (i.e. trained values are not retained by the SDRAM).
12) Wait tXCBT
13) Issue MRW-1 and MRW-2 commands to exit Command Bus Training mode and to set VRCG VREF High Current mode is disabled as needed
14) Issue ZQ_Stop (set MR28 OP[1]=0_B) for starting Background ZQ Calibration.
15) Wait tZQCALx and issue ZQCal Latch commands.
16) Write the trained values to FSP-WR[y] by issuing MRW-1 and MRW-2 commands to the SDRAM and setting all applicable mode register parameters.
17) Issue MRW-1 and MRW-2 commands to switch to FSP-OP[y] to turn on termination, and change CK frequency and VDDQ level to the FSP-OP[y] operation point. At this point the Command Bus is trained and other training or normal operation can be executed.

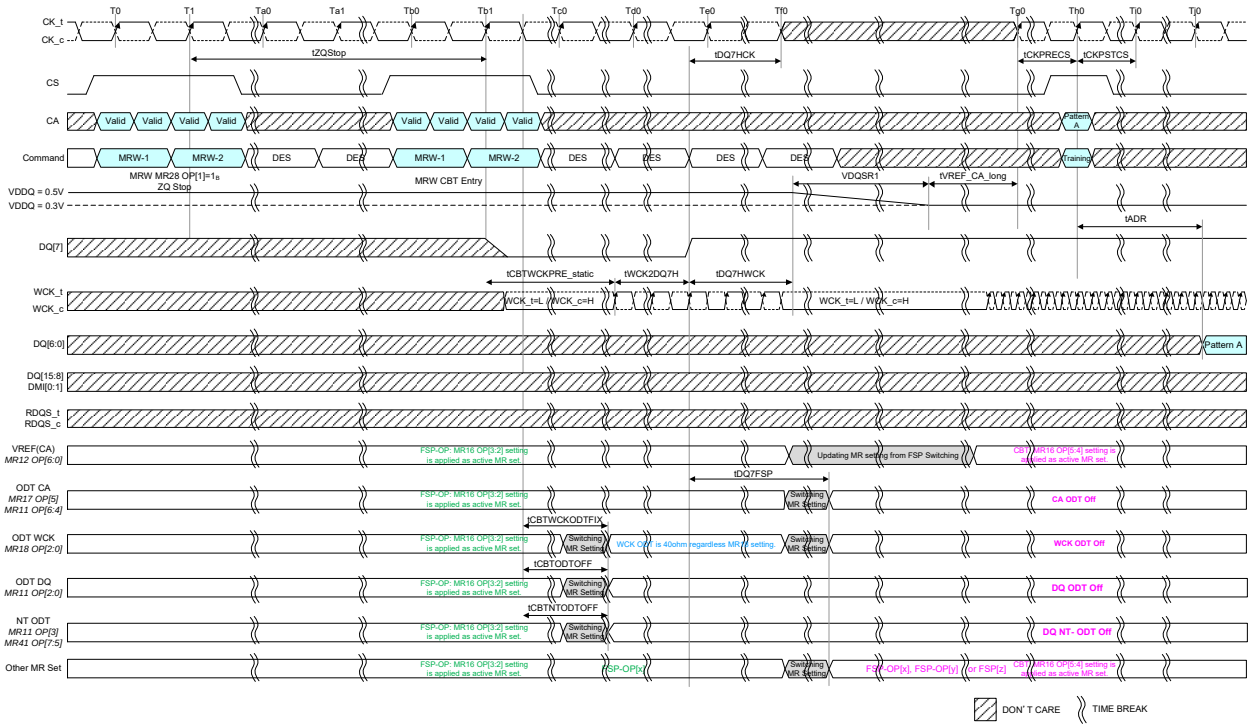

NOTE 1 After tDQ7HCK, clock (CK) can be stopped or frequency changed any time.

NOTE 2 The input clock condition should be satisfied tCKPRECS.

NOTE 3 Continue to drive CK and hold CS pins low until tDQ7HCK after DQ[7] goes HIGH.

NOTE 4 After DQ[7] is driven HIGH and the SDRAM samples the HIGH level of DQ[7] by WCK toggle in Command Bus Training mode, the SDRAM will switch its FSP-OP registers to use the alternate(i.e. non-active) set. Example: If the SDRAM is currently using FSP-OP[0], then it will switch to FSP-OP[1] when DQ[7] is driven HIGH and sampled HIGH level by WCK toggle. All operating parameters should be written to the alternate mode registers before entering Command Bus Training to ensure that ODT settings, RL/WL/nWR setting, etc., are set to the correct values.

NOTE 5 CA ODT, WCK ODT and DQ ODT/NT-ODT are turned off during CBT with DVFSQ operation.

NOTE 6 The same FSP and clock frequency may be used before and after Command Bus Training entry.

NOTE 7 CBT Phase: MR16 OP[7] = 0_B

Figure 29 - Entering Command Bus Training Mode and CA Training Pattern Input and Output (Background ZQ Calibration)

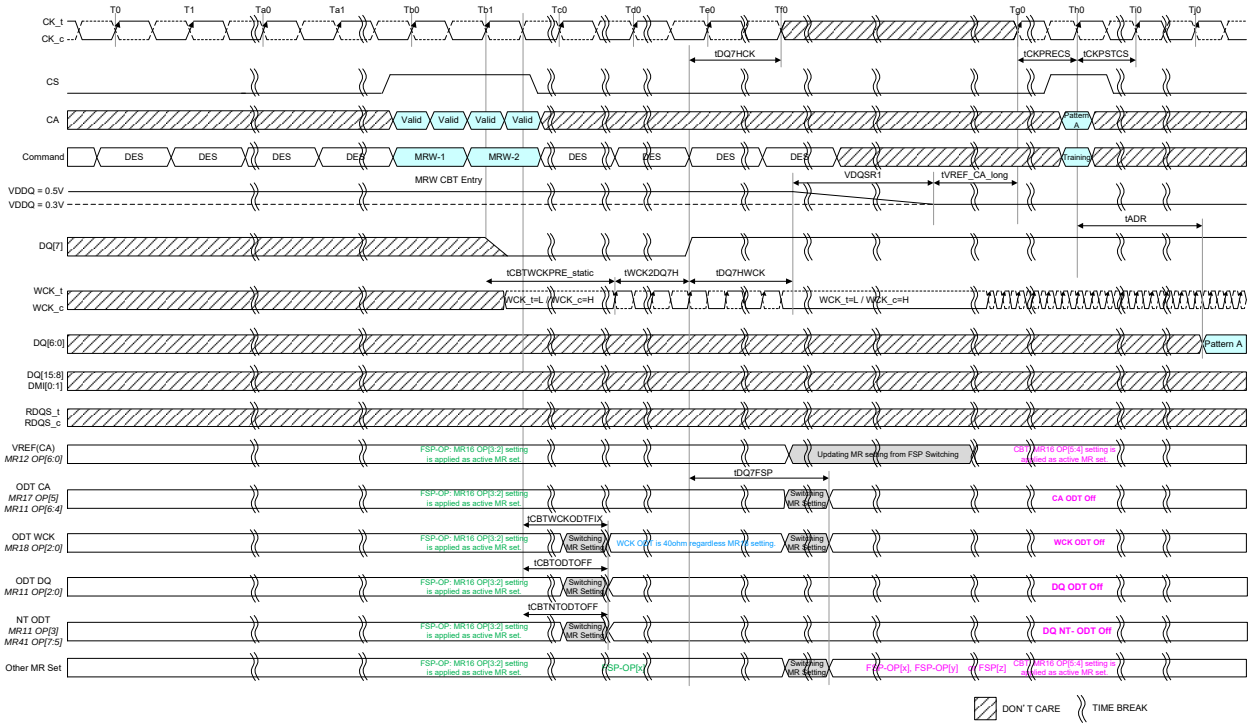

NOTE 1 After tDQ7HCK, clock (CK) can be stopped or frequency changed any time.
NOTE 2 The input clock condition should be satisfied tCKPRECS.
NOTE 3 Continue to drive CK and hold CS pins low until tDQ7HCK after DQ[7] goes HIGH.
NOTE 4 After DQ[7] is driven HIGH and the SDRAM samples the HIGH level of DQ[7] by WCK toggle in Command Bus Training mode, the SDRAM will switch its FSP-OP registers to use the alternate(i.e. non-active) set. Example: If the SDRAM is currently using FSP-OP[0], then it will switch to FSP-OP[1] when DQ[7] is driven HIGH and sampled HIGH level by WCK toggle. All operating parameters should be written to the alternate mode registers before entering Command Bus Training to ensure that ODT settings, RL/WL/nWR setting, etc., are set to the correct values.
NOTE 5 CA ODT, WCK ODT and DQ ODT/NT-ODT are turned off during CBT with DVFSQ operation.
NOTE 6 The same FSP and clock frequency may be used before and after Command Bus Training entry.
NOTE 7 CBT Phase: MR16 OP[7] = 0_B

Figure 30 - Entering Command Bus Training Mode and CA Training Pattern Input and Output (Command-based ZQ Calibration)

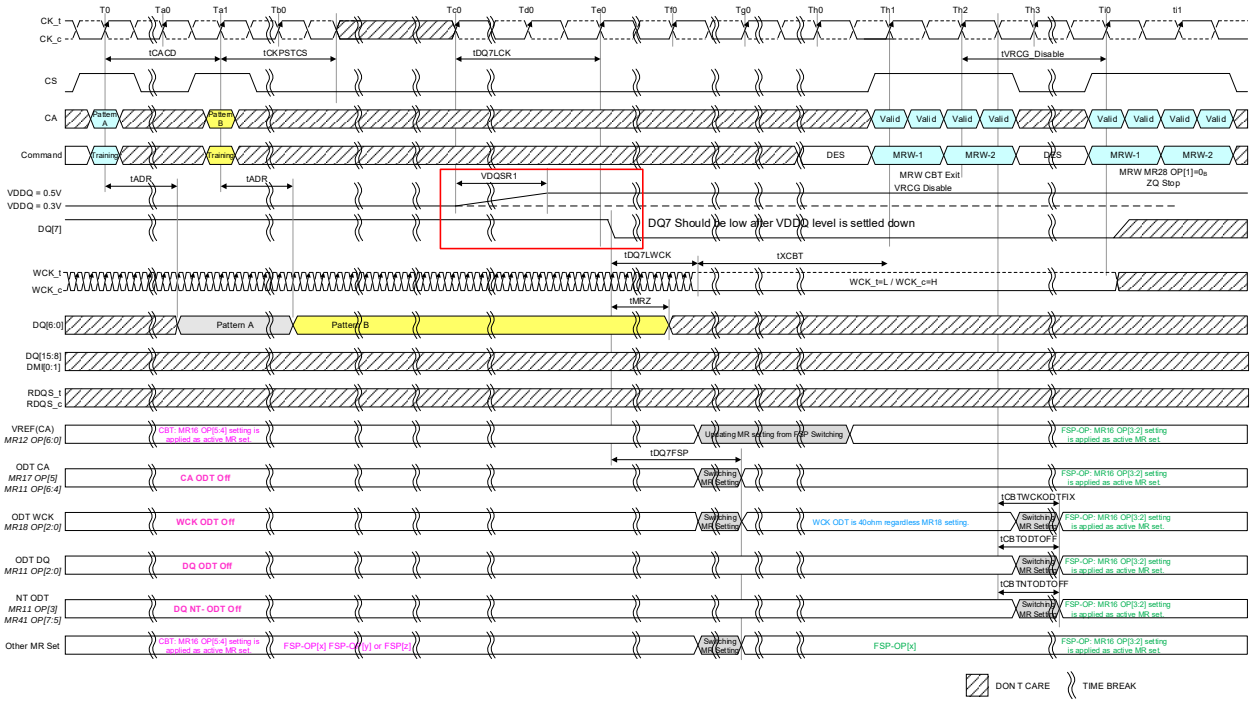

NOTE 1 CK is required to satisfy tDQ7LCK before DQ[7] is driven low.

NOTE 2 DQ[7] and WCK signal are required to be valid level until tMRD which is caused by MRW command to exiting this mode is satisfied.

NOTE 3 After DQ[7] is driven low and the SDRAM samples the LOW level of DQ[7] by WCK toggle, the SDRAM ODT_CA will revert to the state/value defined by FSP-OP prior to Command Bus Training mode entry, i.e. the original frequency set point (FSP-OP).
Example: If the SDRAM was using FSP-OP[x], FSP-OP[y] or FSP-OP[z] for training, then it will switch to FSP-OP[x] after DQ[7] is driven LOW and sampled LOW level by WCK toggle.

NOTE 4 WCK doesn't need to synchronize with clock signal during CBT mode.

Figure 31 – Consecutive CA input and Exiting Command Bus Training Mode (Background ZQ Calibration)

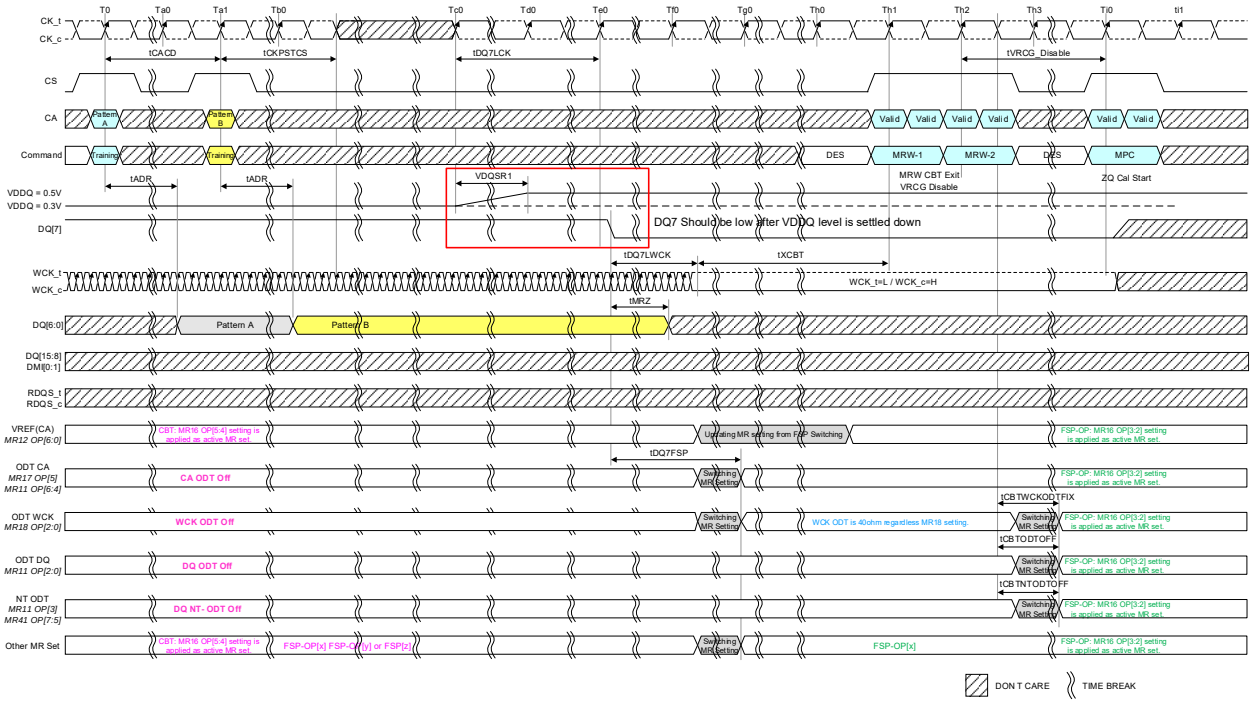

NOTE 1 CK is required to satisfy tDQ7LCK before DQ[7] is driven low.

NOTE 2 DQ[7] and WCK signal are required to be valid level until tMRD which is caused by MRW command to exiting this mode is satisfied.

NOTE 3 After DQ[7] is driven low and the SDRAM samples the LOW level of DQ[7] by WCK toggle, the SDRAM ODT_CA will revert to the state/value defined by FSP-OP prior to Command Bus Training mode entry, i.e. the original frequency set point (FSP-OP).
Example: If the SDRAM was using FSP-OP[x], FSP-OP[y] or FSP-OP[z] for training, then it will switch to FSP-OP[x] after DQ[7] is driven LOW and sampled LOW level by WCK toggle.

NOTE 4 WCK doesn't need to synchronize with clock signal during CBT mode.

Figure 32 – Consecutive CA input and Exiting Command Bus Training Mode (Command-based ZQ Calibration)

4.2.1.4 Command Bus Training Mode2

The LPDDR5 SDRAM uses Frequency Set Points to enable multiple operating settings for the die. The LPDDR5 SDRAM is initiated to FSP-OP[0] at power-up, which has the default settings to operate in unterminated, low-frequency environments. Prior to training, the mode register settings should be configured by setting MR16 OP[1:0] for FSP-WR (Frequency Set Point Write/Read Enable), setting all other mode register bits for FSP-OP (Frequency Set Point Operation Mode) to make the desired settings for high-frequency or mid-frequency operation, and setting MR16 OP[5:4] for Command Bus Training Mode selection.
Prior to entering Command Bus Training, the LPDDR5 SDRAM will be operating from FSP-OP[x]. Upon Command Bus Training entry when DQ[7] is driven HIGH, the LPDDR5 SDRAM will automatically switch to the active FSP register set FSP-OP[x], FSP-OP[y] or FSP-OP[z] according to MR16 OP[5:4] and use the active register settings during training. Upon Command Bus Training exit when DQ[7] is driven LOW, the LPDDR5 SDRAM will automatically switch back to the original FSP register set FSP-OP[x], returning to the “known-good” state that was operating prior to training. The training values for VREF(CA) are not retained by the DRAM in FSP-OP[y] or FSP-OP[z] registers, and must be written to the registers after training exit.
LPDDR5 SDRAM can select the Command Bus Training CA phase by MR16 OP[7] setting. If MR16 OP[7] =0_B, DQ outputs CA pattern latched by CK_t rising edge. If MR16 OP[7] =1_B, DQ outputs CA pattern latched by CK_t falling edge.
Differential WCK input is needed during CBT mode. Hence MR20 OP[3:2] is required to set 00_B to both FSP set which use CBT training prior to entering CBT mode. In addition, VRCG shall be turned on during CBT mode with DVFSQ.

1) Set MR13 OP[6]=1_B for Command Bus Training Mode2.
2) To enter Command Bus Training mode, issue a MRW-1 command followed by a MRW-2 command to set MR16 OP[5:4] for the CBT mode selection. WCK ODT value is fixed to 40ohm regardless of MR18 setting, DQ ODT and NT-ODT states are turned off. WCK_t, and WCK_c are input pins for capturing DQ[7], DMI[0] levels by its toggling and DMI[0] is a dedicated pin for capturing the VrefCA setting from DQ[6:0] during CBT mode. WCK input is required to be valid level (WCK_t = Low and WCK_c = High), DQ[6:0] are required to be valid level and, DQ[7] and DMI[0] are required to be low before the MRW-2 command input. After tCBTWCKPRE_static, WCK signal can be toggling and tWCK2DQ7H is required to be satisfied before DQ7 goes high.
   DQ[7] is driven HIGH and when the LPDDR5 SDRAM samples the high level of DQ[7] by WCK, the LPDDR5 SDRAM switches from FSP-OP[x] to FSP set defined by MR16 OP[5:4] completing the entry into Command Bus Training mode. When entering command Bus Training mode:
   - DQ[6:0] become input pins for setting VREF(CA) level and the VREF(CA) level is captured at the internal DMI[0] rising edge which LPDDR5 SDRAM samples High level of DMI[0] by WCK. The input level of DQ[6:0] is required to remain during the tDStrain + tDHtrain period and DMI[0] should be maintained "High" for tDHtrain, completing the latching of specific patterns.
   - DQ[6:0] become output pins to feedback the captured value via the command address bus from the CS HIGH signal until Low level of DMI[0] is sampled by WCK.
   - DMI[0] is used as a strobe pin for VREF(CA) setting updates via DQ[6:0] and is also used as a DQ[6:0] output-mode-off switch. The LPDDR5 SDRAM samples DQ[6:0] levels by the internal DMI[0] rising edge and then updates its VREF(CA) setting.
   - When the LOW level of DMI[0] is sampled by WCK, DQ[6:0] output mode is turned-off and input mode is turned on.

3) After tDQ7HWCK and tDQ72DQ from DQ[7] riding edge, the LPDDR5 SDRAM can accept its VREF(CA) value change using input signals of DQ[6:0]. The LPDDR5 SDRAM samples DQ[6:0] by the internal DMI[0] rising edge and then updates the existing value that was set via MR12 OP[6:0]. The mapping between MR12 OP code and DQ's is shown Table 27. At least one VREF(CA) setting is required before proceeding to the next training steps.
4) The new VREF(CA) value must “settle” for time tVREF_LONG before attempting to latch CA information.
5) To verify that the receiver has the correct VREF(CA) setting and to further train the CA eye relative to clock(CK), values latched at the receiver on the CA bus are asynchronously output to the DQ bus.
6) To exit Command Bus Training mode, change CK frequency to the low frequency operating point and then drive DQ[7] Low. After time tDQ7LWCK + tXCBT issue the MRW command to set MR16 OP[5:4] = 00_B. After time tMRD the LPDDR5 SDRAM is ready for normal operation. After training exit, the LPDDR5 SDRAM will automatically switch back to the FSP-OP registers that were in use prior to training. Command Bus Training may be entered from IDLE or Self Refresh states. When entering CBT in the Self Refresh state, the SDRAM is not required to be in a Power Down state or Deep Sleep Mode. Command Bus Training entry and exit is the same, regardless of the SDRAM state from which CBT is initiated.

Command Bus Training may be entered from IDLE or Self Refresh states. When entering CBT, the SDRAM must not be a Power Down state or Deep Sleep Mode. Command Bus Training entry and exit is the same, regardless of the SDRAM state from which CBT is initiated.

Table 27 - Mapping of MR12 OP Code and DQ Numbers

	Mapping						
MR12 OP code	OP6	OP5	OP4	OP3	OP2	OP1	OP0
DQ Number	DQ6	DQ5	DQ4	DQ3	DQ2	DQ1	DQ0

Table 28 - Mapping of CA Input pin and DQ Output pin

	Mapping						
CA Number	CA6	CA5	CA4	CA3	CA2	CA1	CA0
DQ Number	DQ6	DQ5	DQ4	DQ3	DQ2	DQ1	DQ0

Training Sequence for single-rank systems

Note that an example shown here is assuming an initial low-frequency, un-termination operating point, training a high-frequency or a mid-frequency, termination operating point. The blue text is low-frequency,

The red text is high-frequency. Any operating point may be trained from any known good operating point. This example is assuming on the following condition. Frequency Set Point “X” for low frequency operation and Frequency Set Point “Y” for high frequency operation.

1) Set MR16 OP[1:0] to enable writing to Frequency Set Point “Y” (FSP-WR[y]).
2) Write FSP-WR[y] registers for all channels to set up high frequency operating parameters.
3) Set MR16 OP[5:4] to select CBT mode (CBT[y]).
4) Issue MRW-1 and MRW-2 commands to enter Command Bus Training mode.
5) Drive DQ[7] HIGH, and then change CK frequency to the high frequency operating point.
6) Perform Command Bus Training (VREF(CA), CS and CA).
7) Exit training by driving DQ[7] LOW, a change CK frequency to the low frequency operating point prior to driving DQ[7] Low, and then issue MRW-1 and MRW-2 commands to exit Command Bus Training mode. When DQ[7] is driven LOW and SDRAM samples the LOW level of DQ[7] by WCK, the SDRAM will automatically switch back to the FSP-OP registers that were in use prior to training (i.e. trained values are not retained by the SDRAM).
8) Write the trained values to FSP-WR[y] by issuing MRW-1 and MRW-2 commands to the SDRAM and setting all applicable mode register parameters.
9) Issue MRW-1 and MRW-2 commands to switch to FSP-OP[y] to turn on termination, and change CK frequency to the high frequency operation point. At this point the Command Bus is trained and other training or normal operation can be executed.

Training Sequence for multi-rank systems

Note that an example shown here is assuming an initial low-frequency, un-termination operating point, training a high-frequency or a mid-frequency, termination operating point. The blue text is low-frequency, the red text is high-frequency. Any operating point may be trained from any known good operating point. This example is assuming on the following condition. Frequency Set Point "X" for low frequency operation and Frequency Set Point "Y" for high frequency operation. FSP-WR[x] and FSP-OP[x] are initial state for both terminated rank and non-terminated rank. WCK ODT and NT-ODT for both terminated rank and non-terminated rank are required to be disabled with both FSP-OP[x] and FSP-OP[y] prior to start the command bus training: WCK ODT: MR18 OP[2:0]=000_B, NT-ODT: MR11 OP[3]=0_B or MR41 OP[7:5]=000_B. The reason why recommended WCK ODT and NT-ODT setting to be disabled is that to ensure sufficient amplitude for WCK, DQ[7:0] and DMI input. Since these signal pins are applied several functions during CBT mode, controlling entering/exiting CBT mode and capturing DQ[7] input level, for example.

1) Set MR16 OP[1:0] to enable writing to Frequency Set Point "Y" (FSP-WR[y]) for both ranks.
2) Write FSP-WR[y] registers for all channels to set up high frequency operating parameters for both ranks.
3) Issue MRW-1 and MRW-2 commands to enter Command Bus Training mode (CBT[y]) on the terminating rank: Set MR16 OP[5:4] to select CBT mode (CBT[y]).
4) Drive DQ[7] HIGH on the terminating rank (or all ranks), and then change CK frequency to the high frequency operating point.
5) Perform Command Bus Training on the terminating rank (VREF(CA), CS and CA).
6) A change CK frequency to the low frequency operating point, and then driving DQ[7] LOW on the terminating rank (or all ranks). When DQ[7] is driven LOW and SDRAM samples the LOW level of DQ[7] by WCK, the SDRAM will automatically switch back to the FSP-OP registers that were in use prior to training (i.e. trained values are not retained by the SDRAM)
7) Issue MRW-1 and MRW-2 commands to exit Command Bus Training mode (Normal Operation) on the terminating rank: Set MR16 OP[5:4] to select Normal Operation.
8) Write the trained values to FSP-WR[y] of the terminating rank by issuing MRW-1 and MRW-2 commands to the SDRAM and setting all applicable mode register parameters.
9) Issue MRW-1 and MRW-2 commands to enter Command Bus Training mode (CBT[y]) on the non-terminating rank: Set MR16 OP[5:4] to select CBT mode (CBT[y]). But, keep DQ[7] LOW.
10) Issue MRW-1 and MRW-2 commands to switch the terminating rank to FSP-OP[y] to turn on termination. and then change CK frequency to the high frequency operating point.
11) Drive DQ[7] HIGH on the non-terminating (or all) ranks. The non-terminating rank(s) will now be using FSP-OP[y].
12) Perform Command Bus Training on the non-terminating rank (VREF(CA), CS and CA).
13) Issue MRW-1 and MRW-2 commands to switch the terminating rank to FSP-OP[x] to turn off termination.
14) Exit training by driving DQ[7] LOW on the non-terminating rank, change CK frequency to the low frequency operating point, and issue MRW-1 and MRW-2 commands to exit Command Bus Training mode. When DQ[7] is driven LOW and SDRAM samples the LOW level of DQ[7] by WCK, the SDRAM will automatically switch back to the FSP-OP registers that were in use prior to training (i.e. trained values are not retained by the SDRAM).
15) Write the trained values of the non-terminating rank to FSP-WR[y] by issuing MRW-1 and MRW-2 commands to the SDRAM and setting all applicable mode register parameters.

16) Issue MRW-1 and MRW-2 commands to switch the terminating rank to FSP-OP[y] to turn on termination, and change CK frequency to the high frequency operation point. At this point the Command Bus is trained for both ranks and other training or normal operation can be executed.

The basic timing diagrams of Command Bus Training Mode2 are shown in following figures.

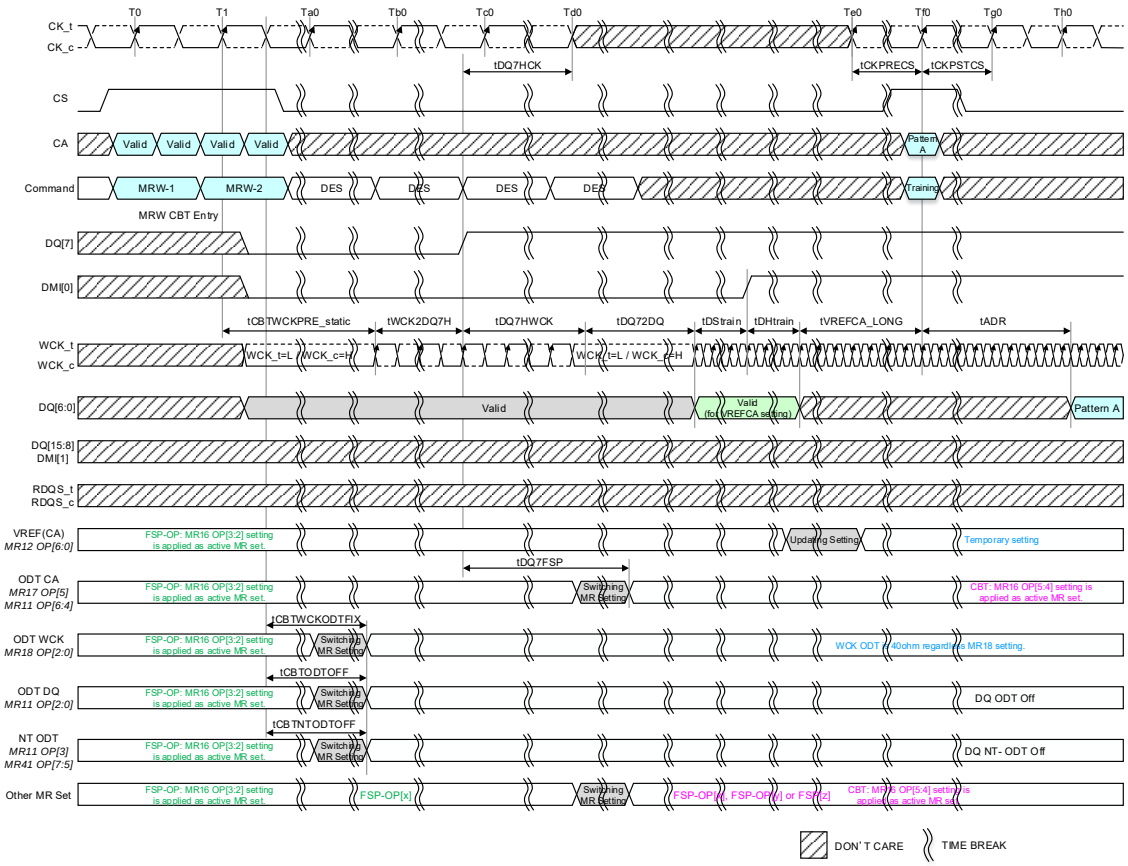

NOTE 1 After tDQ7HCK, clock (CK) can be stopped or frequency changed any time.
NOTE 2 The input clock condition should be satisfied tCKPRECS.
NOTE 3 Continue to drive CK and hold CS pins low until tDQ7HCK after DQ[7] goes HIGH.
NOTE 4 The value of the DQ[6:0] signal level is sampled by the DMI[0] rising edge. The DRAM updates its VREFCA setting of MR12 temporary, after time tVREFCA_long.
NOTE 5 tVREFCA_long may be reduced to tVREFCA_short.
NOTE 6 After DQ[7] is driven HIGH and the SDRAM samples the HIGH level of DQ[7] by WCK toggle in Command Bus Training mode, the SDRAM will switch its FSP-OP registers to use the alternate(i.e. non-active) set. Example: If the SDRAM is currently using FSP-OP[0], then it will switch to FSP-OP[1] when DQ[7] is driven HIGH and sampled HIGH level by WCK toggle. All operating parameters should be written to the alternate mode registers before entering Command Bus Training to ensure that ODT settings, RL/WL/nWR setting, etc., are set to the correct values. If the alternate FSP-OP has ODT CA disabled then termination will not enable in CA Bus Training mode.
NOTE 7 WCK ODT state is set to a fixed value and DQ ODT/NT-ODT are turned off during CBT operation.
NOTE 8 WCK frequency is don't care during CBT operation as far as the frequency is within the allowed range of each frequency mode (MR18 OP[3]). WCK toggle may be stopped during tDQ72DQ and after tDHtrain, but WCK pair should be driven at static levels as WCK_t = Low and WCK_c = High. WCK should toggle to satisfy tWCK2DQ7H and tDStrain before either DQ[7] or DMI[0] changes again.
NOTE 9 The same FSP and clock frequency may be used before and after Command Bus Training entry.
NOTE 10 CBT Phase: MR16 OP[7] = 0_B

Figure 33 - Entering Command Bus Training Mode and CA Training Pattern Input with VREF(CA) Value Update (WCK Frequency change)

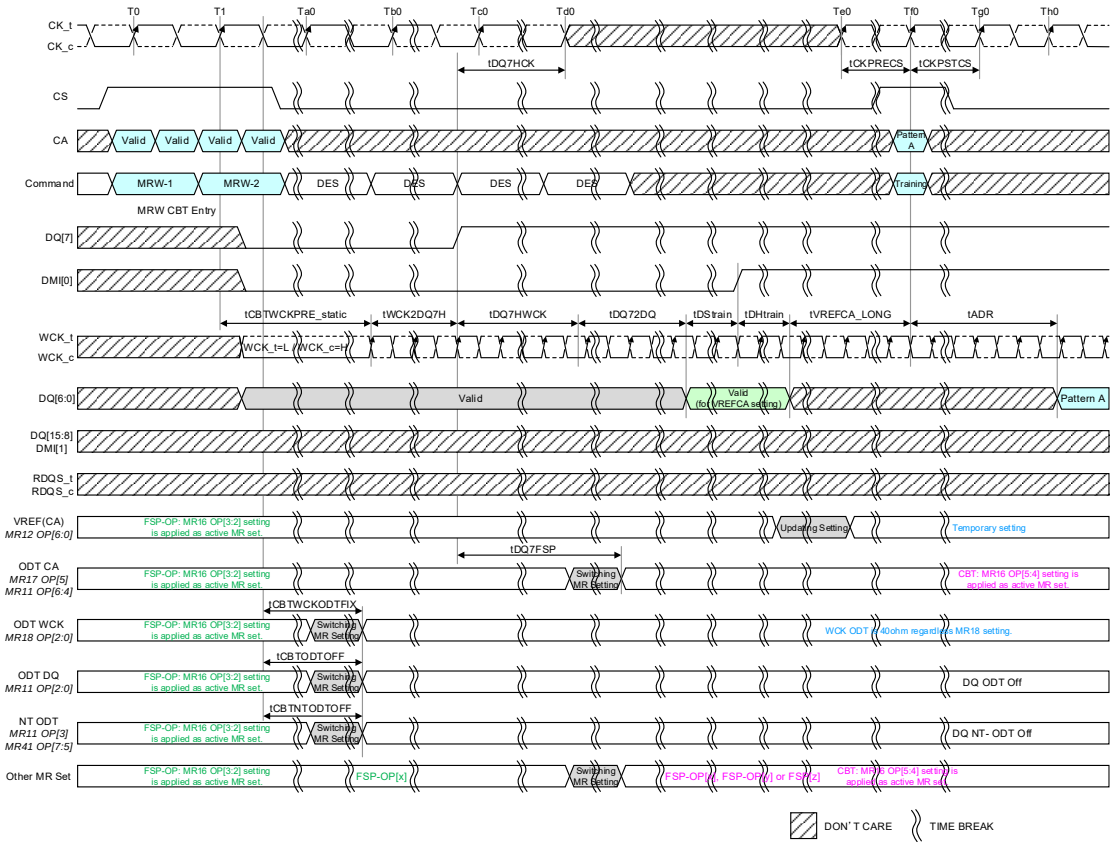

NOTE 1 After tDQ7HCK, clock (CK) can be stopped or frequency changed any time.

NOTE 2 The input clock condition should be satisfied tCKPRECS.

NOTE 3 Continue to drive CK and hold CS pins low until tDQ7HCK after DQ[7] goes HIGH.

NOTE 4 The value of the DQ[6:0] signal level is sampled by the DMI[0] rising edge. The DRAM updates its VREFCA setting of MR12 temporary, after time tVREFCA_long.

NOTE 5 tVREFCA_long may be reduced to tVREFCA_short.

NOTE 6 After DQ[7] is driven HIGH and the SDRAM samples the HIGH level of DQ[7] by WCK toggle in Command Bus Training mode, the SDRAM will switch its FSP-OP registers to use the alternate(i.e. non-active) set. Example: If the SDRAM is currently using FSP-OP[0], then it will switch to FSP-OP[1] when DQ[7] is driven HIGH and sampled HIGH level by WCK toggle. All operating parameters should be written to the alternate mode registers before entering Command Bus Training to ensure that ODT settings, RL/WL/nWR setting, etc., are set to the correct values. If the alternate FSP-OP has ODT CA disabled then termination will not enable in CA Bus Training mode.

NOTE 7 WCK ODT state is set to a fixed value and DQ ODT/NT-ODT are turned off during CBT operation.

NOTE 8 Set fixed WCK frequency during CBT operation regardless of CK:WCK ratio.
WCK frequency is don't care during CBT operation as far as the frequency is within the allowed range of each frequency mode (MR18 OP[3]). WCK toggle may be stopped during tDQ72DQ and after tDHtrain, but WCK pair should be driven at static levels as WCK_t = Low and WCK_c = High. WCK should toggle to satisfy tWCK2DQ7H and tDStrain before either DQ[7] or DMI[0] changes again.

NOTE 9 The same FSP and clock frequency may be used before and after Command Bus Training entry.

NOTE 10 CBT Phase: MR16 OP[7] = 0_B

Figure 34 - Entering Command Bus Training Mode and CA Training Pattern Input with VREF(CA) Value Update (Fixed WCK Frequency)

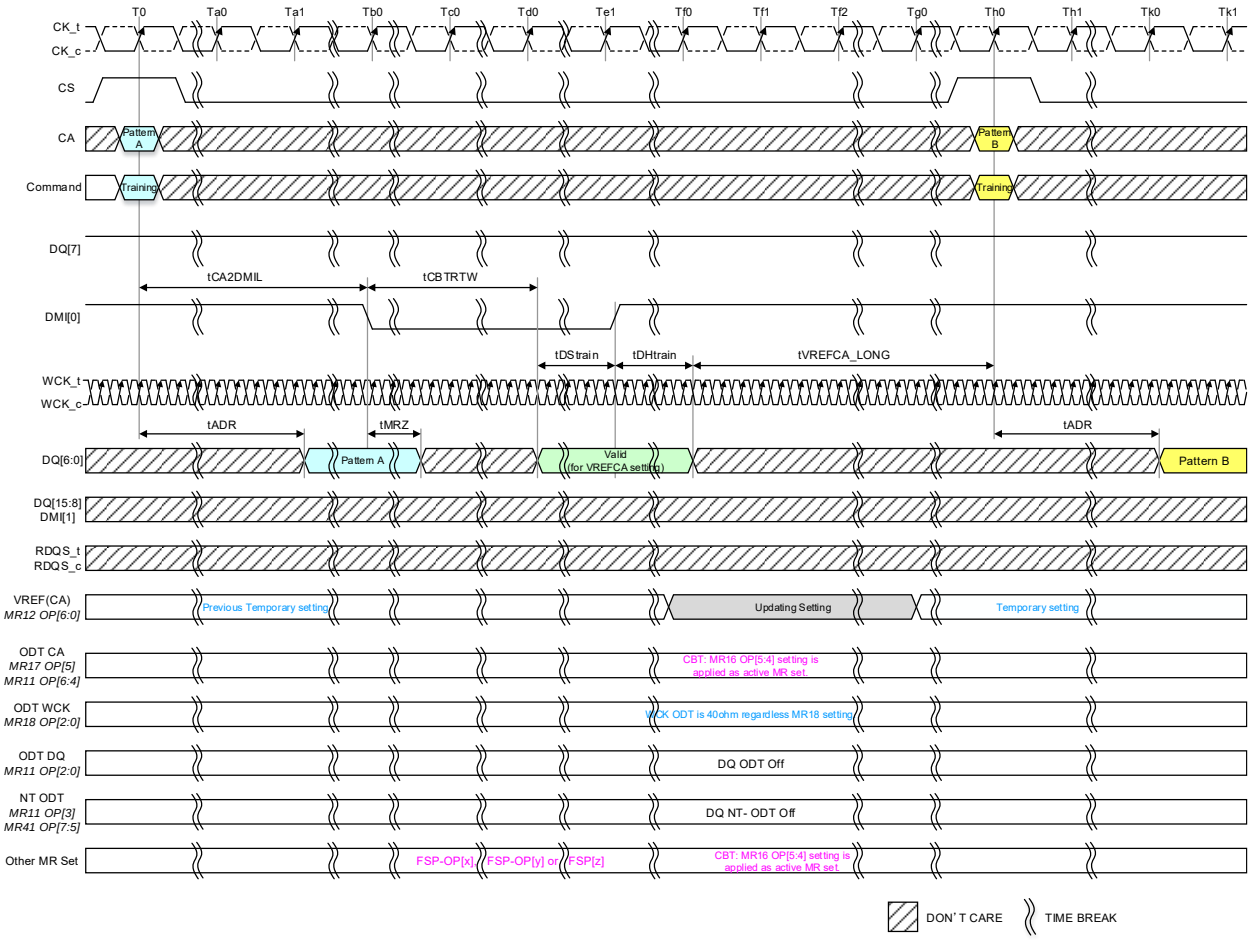

NOTE 1 The value of the DQ[6:0] signal level is sampled by DMI[0] rising edge. The DRAM updates its VREFCA setting of MR12 temporary, after time tVREFCA_long.
NOTE 2 To change read mode to write mode for DQ pins, DMI[0] has to be driven LOW.
NOTE 3 tVREFCA_long may be reduced to tVREFCA_short.

Figure 35 - CA pattern Input/Output to Vref setting Input

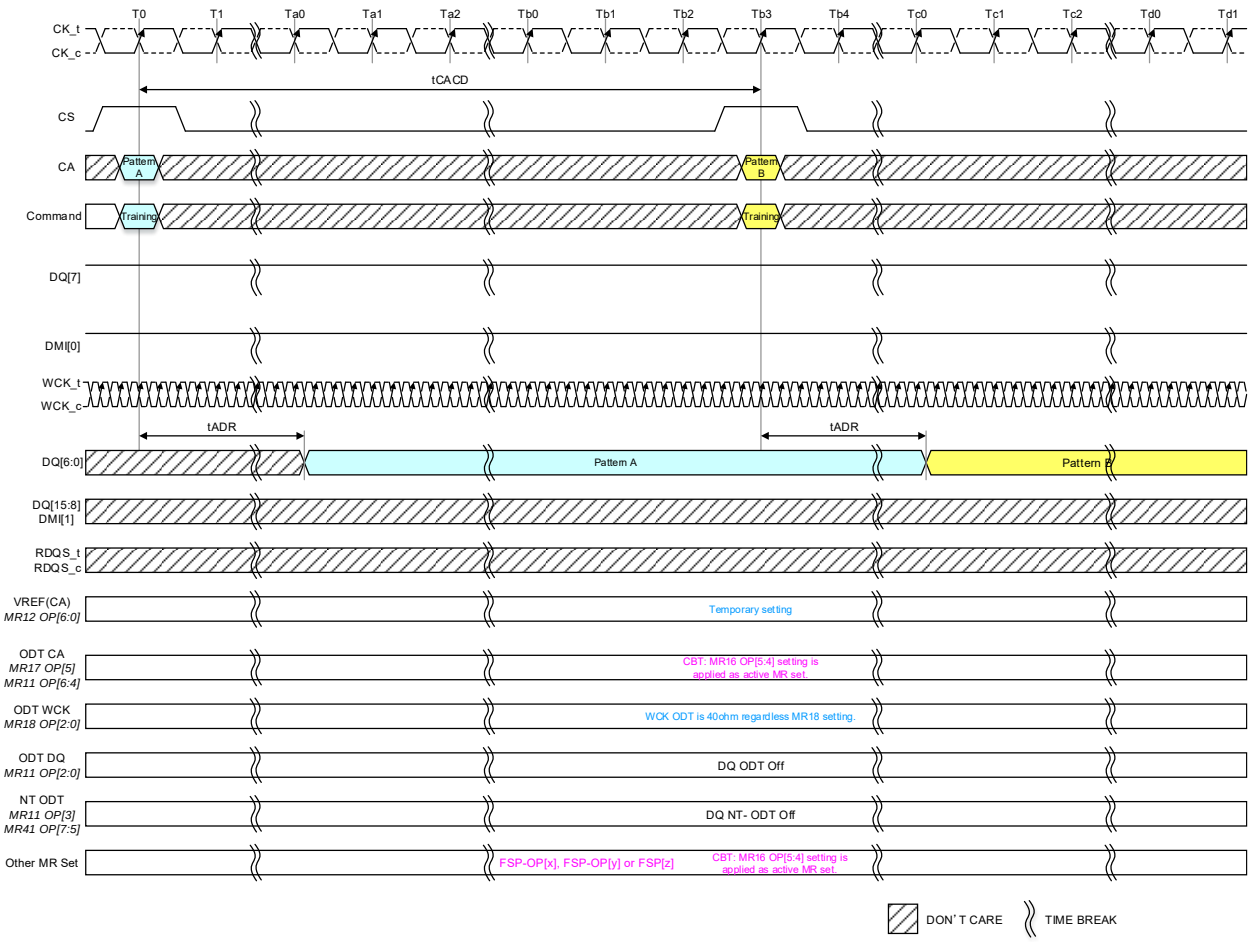

Figure 36 - Consecutive CA training pattern Input/Output

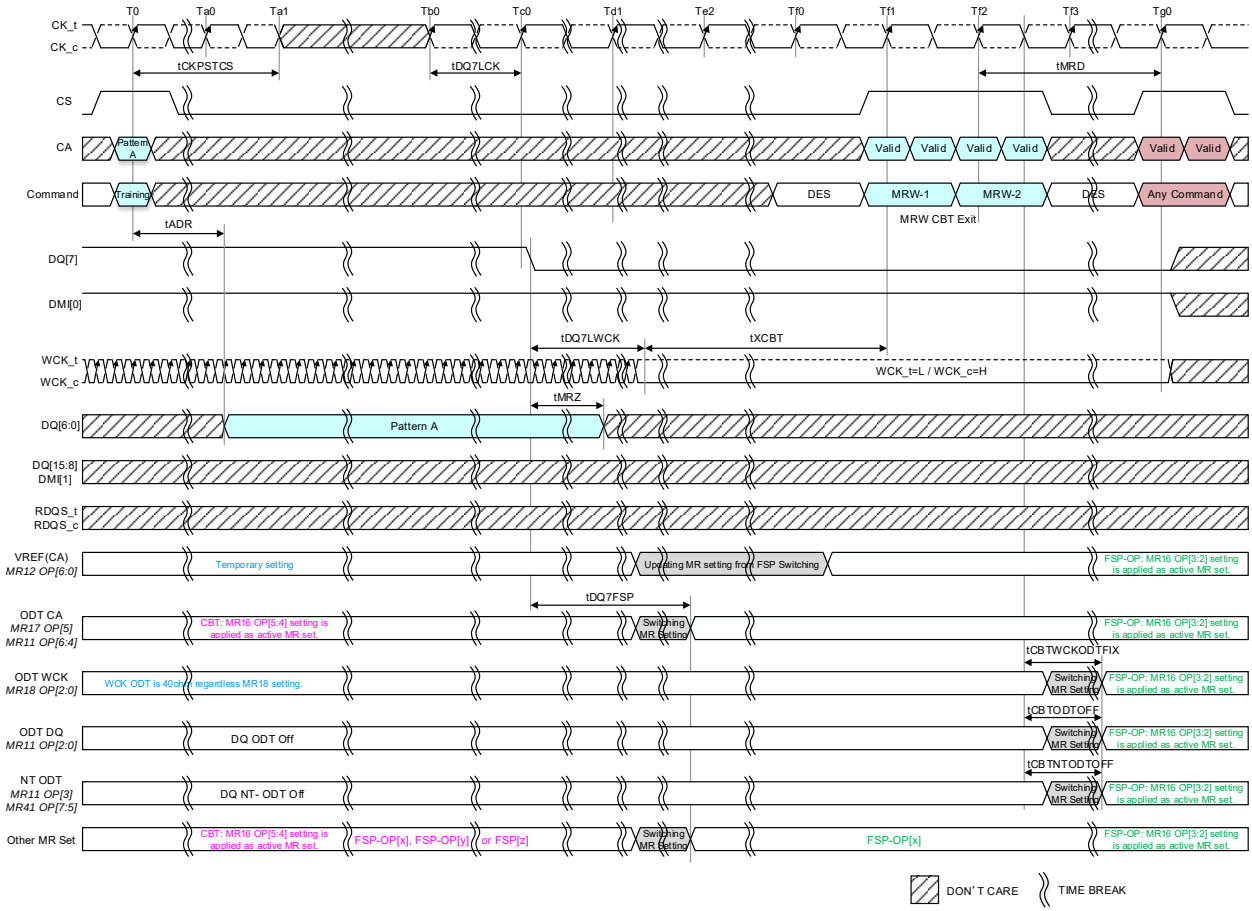

NOTE 1 CK is required to satisfy tDQ7LCK before DQ[7] is driven low.

NOTE 2 DQ[7], DMI[0] and WCK signal are required to be valid level until tMRD which is caused by MRW command to exiting this mode is satisfied.

NOTE 3 After DQ[7] is driven low and the SDRAM samples the LOW level of DQ[7] by WCK toggle, the SDRAM ODT_CA will revert to the state/value defined by FSP-OP prior to Command Bus Training mode entry, i.e. the original frequency set point (FSP-OP).
Example: If the SDRAM was using FSP-OP[x], FSP-OP[y] or FSP-OP[z] for training, then it will switch to FSP-OP[x] after DQ[7] is driven LOW and sampled LOW level by WCK toggle.

NOTE 4 Training values are not retained by the SDRAM, and must be written to the FSP-OP register set before returning to operation at the trained frequency. Example: VREFCA will return to the value programmed in the original set point.

NOTE 5 WCK doesn't need to synchronize with clock signal during CBT mode.

Figure 37 - Exiting Command Bus Training Mode

Table 29 - Command Bus Training AC Timing Table

Item	Symbol	Min/ Max	Data Rate (Mbps)												Unit	Notes
			533	1066	1600	2133	2750	3200	3733	4266	4800	5500	6000	6400		
Command Bus Training Timing																
Static WCK period (CBT entry to WCK toggling start)	tCBTWCKPRE_static	Min	Max(20ns, 2nCK)												ns	
Set-up margin between DQ7 and WCK	tWCK2DQ7H	Min	Max(5ns, 12nWCK)												ns	
Hold margin between DQ7 and WCK	tDQ7HWCK	Min	Max(5ns, 12nWCK)												ns	
Clock and Command Valid after DQ7 High	tDQ7HCK	Min	Max(5ns, 3nCK)												ns	
ODT CA change latency after DQ7 High	tDQ7FSP	Max	20												ns	
DQ7 High to valid DQ[6:0] input for VREFCA setting	tDQ72DQ	Min	250												ns	
Valid Clock Requirement before CS High	tCKPRECS	Min	2tCK + tXP (tXP = Max(7.5ns, 3nCK))												ns	
Valid Clock Requirement after CS High	tCKPSTCS	Min	Max(7.5ns, 3nCK)												ns	
VREF Step Time – Long	tVREFCA_long	Max	250												ns	1
VREF Step Time – Short	tVREFCA_short	Max	200												ns	2
Data Setup for Vref Training Mode	tDStrain	Min	Max(5ns, 12nWCK)												ns	
Data Hold for Vref Training Mode	tDHtrain	Min	Max(5ns, 12nWCK)												ns	
Asynchronous Data Read	tADR	Max	20												ns	
CBT Command input to DMI Low	tCA2DMIL	Min	30												ns	
DQ<7> Low to DQ driver off	tMRZ	Min	1.5												ns	
DMI Low to Valid DQ input for VREFCA setting	tCBTRTW	Min	Max(20ns, 12nWCK)												ns	
CA Bus Training Command to CA Bus Training Command delay	tCACD	Min	RU(tADR/tCK)												tCK	
Valid Clock Requirement before DQ7 Low	tDQ7LCK	Min	Max(5ns, 3nCK)												ns	
DQ7 Low to static WCK	tDQ7LWCK	Min	Max(5ns, 12nWCK)												ns	
Exit Command Bus Training Mode to next valid command delay	tXCBT	Min	Max(5nCK, 250ns)												ns	
Stable time for WCK ODT	tCBTWCKODTFIX	Max	20												ns	
Turned off time for DQ ODT	tCBTODTOFF	Max	20												ns	
Turn off time for NT-ODT	tCBTNTODTOFF	Max	20												ns	

NOTE 1 VREFCA_Long is for at least 2 step-size increment/decrement change including up to VREFmin to VREFmax or VREFmax to VREFmin change in VREF voltage.

NOTE 2 VREFCA_short is for a single step-size increment/decrement change in VREF voltage.

4.2.1.5 Command Bus Training Mode2 (FSP with DVFSQ enable)

CBT for DVFSQ enabled operation, follow below steps.
This section will apply to SDRAM which supports DVFSQ function.
The red text is DVFSQ disabled mode, The blue text is DVFSQ enabled mode.

1) Set MR16 OP[1:0] to enable writing to Frequency Set Point “Y” (FSP-WR[y]).
2) Write FSP-WR[y] registers for all channels to set up DVFSQ enabled operating parameters.
3) Disable SoC ODT and set MRW MR17 OP[2:0]=000_B.
4) In case of Background ZQ calibration mode, issue MRW MR28 to set ZQ_STOP(MR28 OP[1]=1B) and Wait tZQSTOP.
5) Set to VRCG VREF High Current Mode: MR16 OP[6]=1_B and wait tVRCG Enable
6) Set MR16 OP[5:4] to select CBT mode (CBT[y]) by MRW-1 and MRW-2 commands: Entering CBT mode.
7) Drive DQ[7] HIGH, and then ramp VDDQ down to 0.3V nominal. (Do not TRAIN HERE!) For VDDQ slew rate, VDQSR1, refer to “DVFSQ mode” spec.
8) VREFCA update timing, tVREF_CA_long is required after the VDDQ ramp up is completed.
9) Perform Command Bus Training (VREF(CA), CS and CA).
10) Before the CBT exit, ramp VDDQ up to 0.5V nominal.For VDDQ slew rate, VDQSR1, refer to “DVFSQ mode” spec. Change CK frequency to the FSP[x] frequency operating point prior to driving DQ[7] Low
11) Exit training by driving DQ[7] LOW, When DQ[7] is driven LOW and SDRAM samples the LOW level of DQ[7] by WCK, the SDRAM will automatically switch back to the FSP-OP registers that were in use prior to training (i.e. trained values are not retained by the SDRAM).
12) Wait tXCBT
13) Issue MRW-1 and MRW-2 commands to exit Command Bus Training mode, and to set VRCG VREF High Current mode is disabled as needed
14) Issue ZQ_Stop (set MR28 OP[1]=0_B) for starting Background ZQ Calibration.
15) Wait tZQCALx and issue ZQCal Latch commands.
16) Write the trained values to FSP-WR[y] by issuing MRW-1 and MRW-2 commands to the SDRAM and setting all applicable mode register parameters.
17) Issue MRW-1 and MRW-2 commands to switch to FSP-OP[y] to turn on termination, and change CK frequency and VDDQ level to the FSP-OP[y] operation point. At this point the Command Bus is trained and other training or normal operation can be executed.

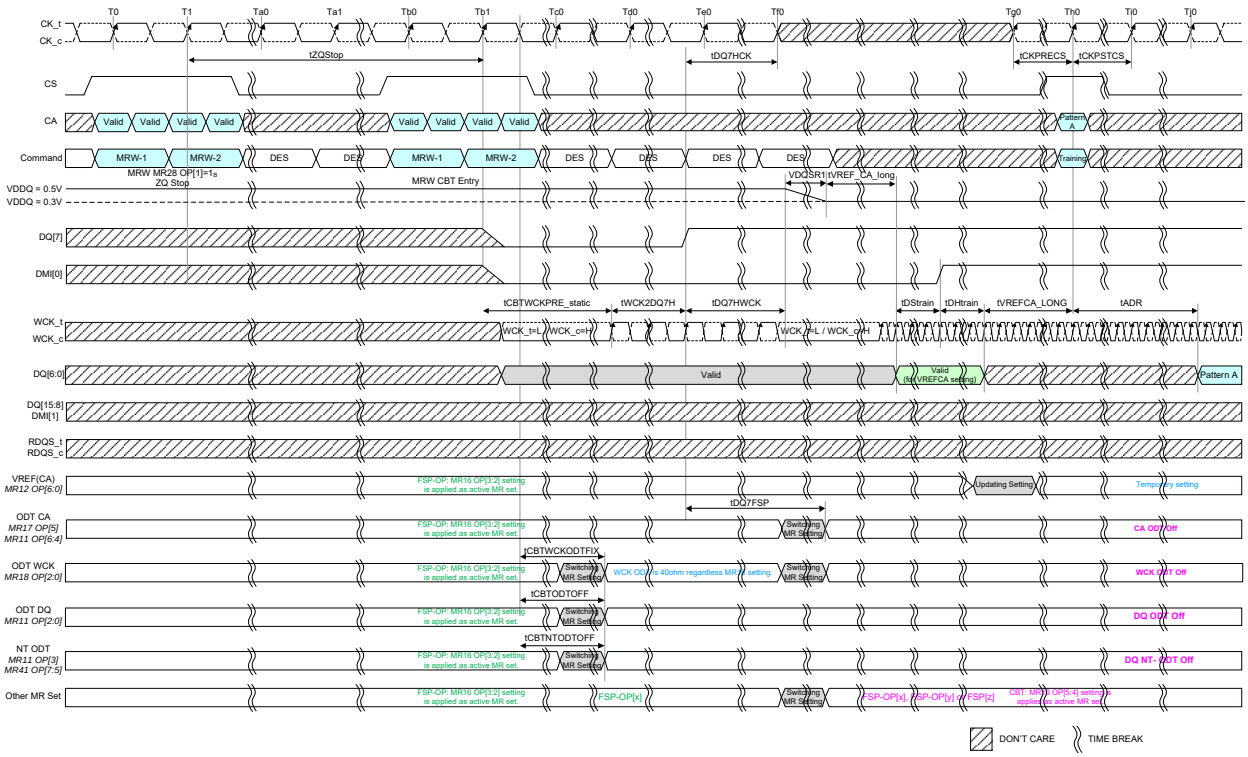

NOTE 1 After tDQ7HCK, clock (CK) can be stopped or frequency changed any time.
NOTE 2 The input clock condition should be satisfied tCKPRECS.
NOTE 3 Continue to drive CK and hold CS pins low until tDQ7HCK after DQ[7] goes HIGH.
NOTE 4 The value of the DQ[6:0] signal level is sampled by the DMI[0] rising edge. The DRAM updates its VREFCA setting of MR12 temporary, after time tVREFCA_long.
NOTE 5 tVREFCA_long may be reduced to tVREFCA_short.
NOTE 6 After DQ[7] is driven HIGH and the SDRAM samples the HIGH level of DQ[7] by WCK toggle in Command Bus Training mode, the SDRAM will switch its FSP-OP registers to use the alternate(i.e. non-active) set. Example: If the SDRAM is currently using FSP-OP[0], then it will switch to FSP-OP[1] when DQ[7] is driven HIGH and sampled HIGH level by WCK toggle. All operating parameters should be written to the alternate mode registers before entering Command Bus Training to ensure that ODT settings, RL/WL/nWR setting, etc., are set to the correct values.
NOTE 7 CA ODT, WCK ODT and DQ ODT/NT-ODT are turned off during CBT with DVFSQ operation.
NOTE 8 During tDQ72DQ, WCK can be stop and changed frequency after FSP change.
NOTE 9 The same FSP and clock frequency may be used before and after Command Bus Training entry.
NOTE 10 CBT Phase: MR16 OP[7] = 0_B

Figure 38 - Entering Command Bus Training Mode and CA Training Pattern Input with VREF(CA) Value Update (Background ZQ Calibration)

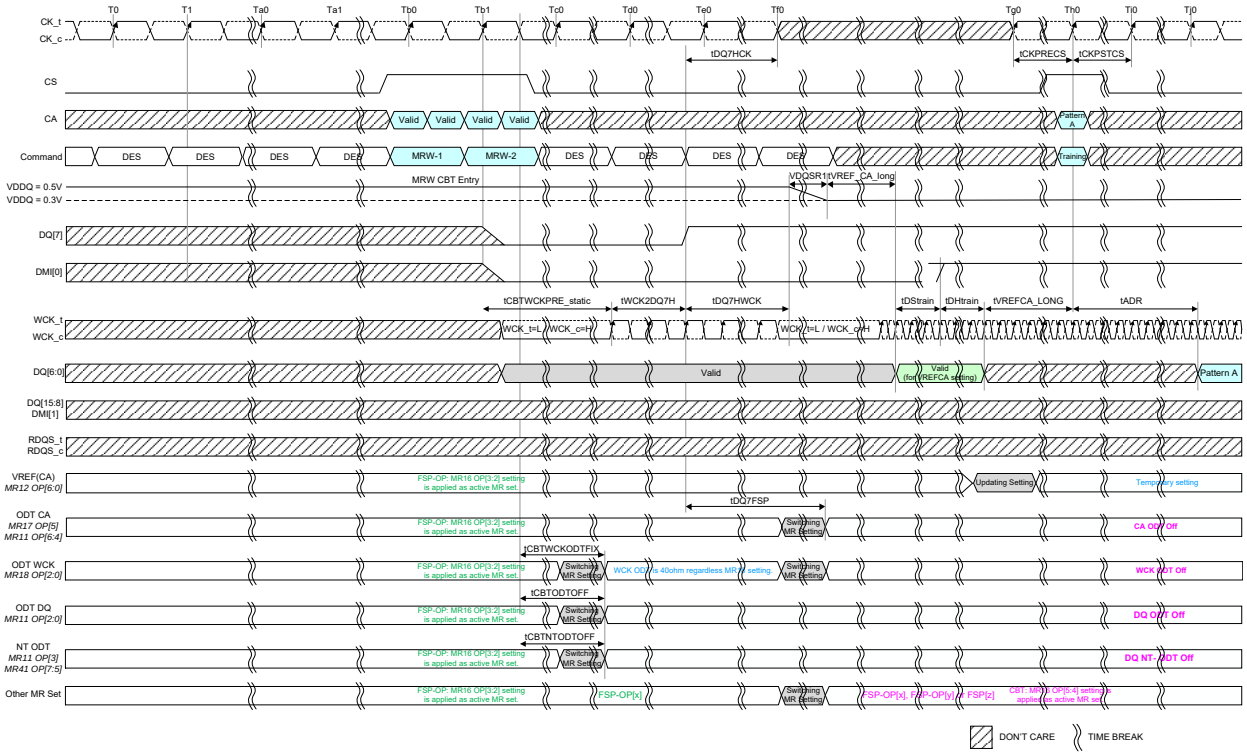

NOTE 1 After tDQ7HCK, clock (CK) can be stopped or frequency changed any time.
NOTE 2 The input clock condition should be satisfied tCKPRECS.
NOTE 3 Continue to drive CK and hold CS pins low until tDQ7HCK after DQ[7] goes HIGH.
NOTE 4 The value of the DQ[6:0] signal level is sampled by the DMI[0] rising edge. The DRAM updates its VREFCA setting of MR12 temporary, after time tVREFCA_long.
NOTE 5 tVREFCA_long may be reduced to tVREFCA_short.
NOTE 6 After DQ[7] is driven HIGH and the SDRAM samples the HIGH level of DQ[7] by WCK toggle in Command Bus Training mode, the SDRAM will switch its FSP-OP registers to use the alternate(i.e. non-active) set. Example: If the SDRAM is currently using FSP-OP[0], then it will switch to FSP-OP[1] when DQ[7] is driven HIGH and sampled HIGH level by WCK toggle. All operating parameters should be written to the alternate mode registers before entering Command Bus Training to ensure that ODT settings, RL/WL/nWR setting, etc., are set to the correct values.
NOTE 7 CA ODT, WCK ODT and DQ ODT/NT-ODT are turned off during CBT with DVFSQ operation.
NOTE 8 During tDQ72DQ, WCK can be stop and changed frequency after FSP change.
NOTE 9 The same FSP and clock frequency may be used before and after Command Bus Training entry.
NOTE 10 CBT Phase: MR16 OP[7] = 0_B

Figure 39 - Entering Command Bus Training Mode and CA Training Pattern Input with VREF(CA) Value Update (Command-based ZQ Calibration)

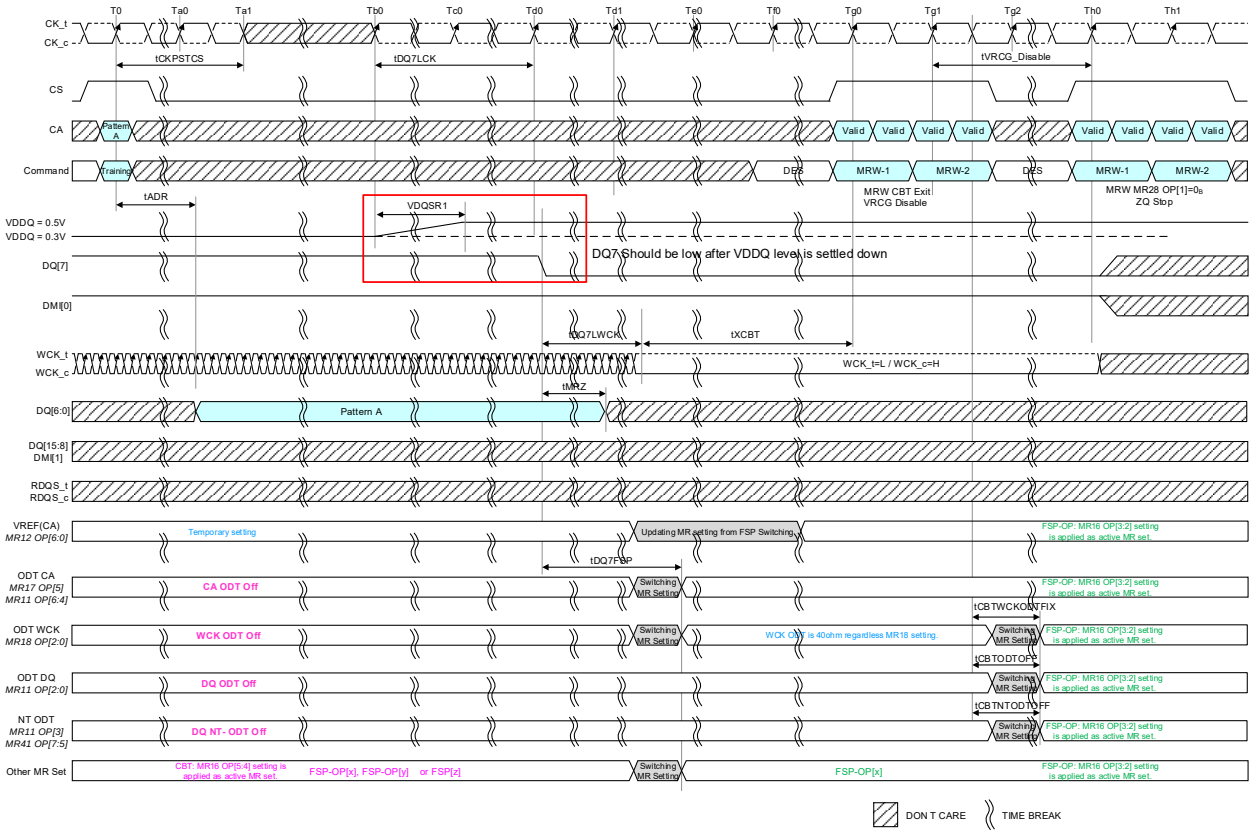

NOTE 1 CK is required to satisfy tDQ7LCK before DQ[7] is driven low.

NOTE 2 DQ[7], DMI[0] and WCK signal are required to be valid level until tMRD which is caused by MRW command to exiting this mode is satisfied.

NOTE 3 After DQ[7] is driven low and the SDRAM samples the LOW level of DQ[7] by WCK toggle, the SDRAM ODT_CA will revert to the state/value defined by FSP-OP prior to Command Bus Training mode entry, i.e. the original frequency set point (FSP-OP).
Example: If the SDRAM was using FSP-OP[x], FSP-OP[y] or FSP-OP[z] for training, then it will switch to FSP-OP[x] after DQ[7] is driven LOW and sampled LOW level by WCK toggle.

NOTE 4 Training values are not retained by the SDRAM, and must be written to the FSP-OP register set before returning to operation at the trained frequency. Example: VREFCA will return to the value programmed in the original set point.

NOTE 5 WCK doesn't need to synchronize with clock signal during CBT mode.

Figure 40 - Exiting Command Bus Training Mode(Background ZQ Calibration)

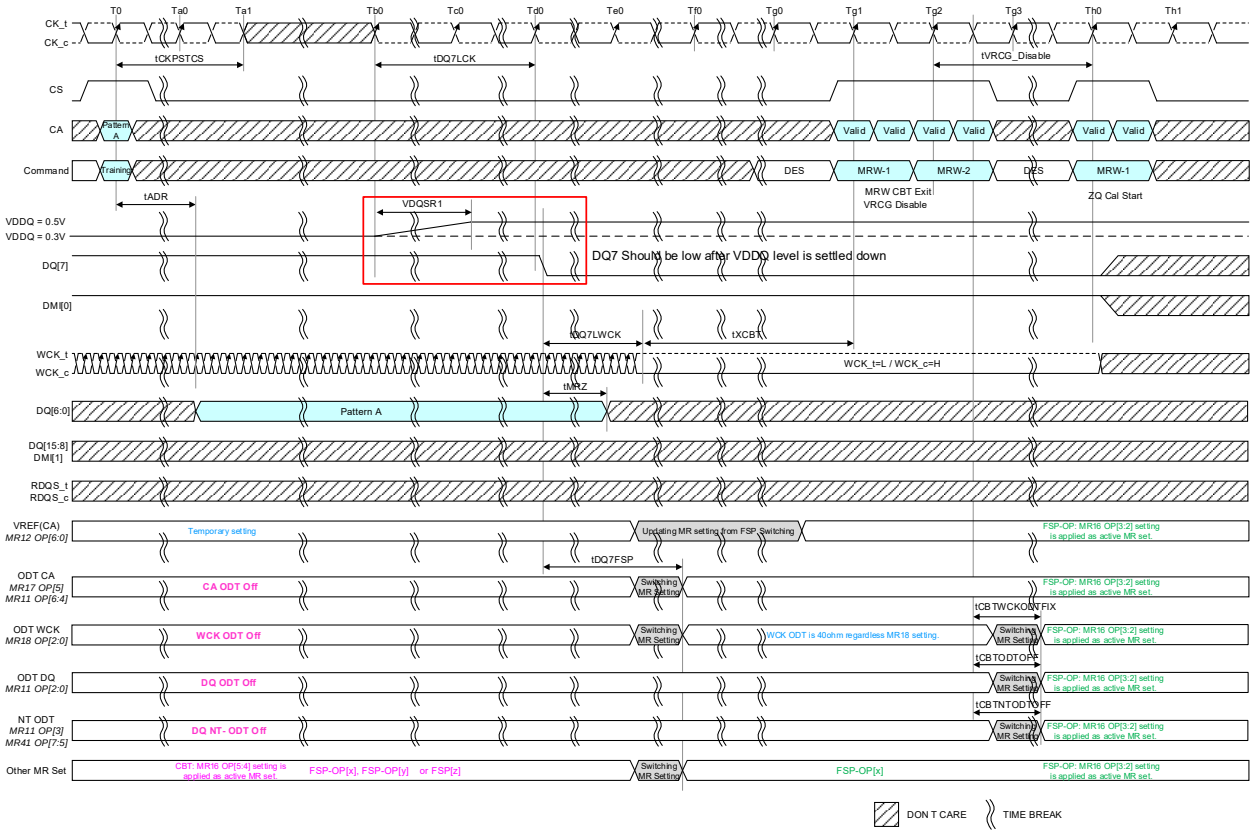

NOTE 1 CK is required to satisfy tDQ7LCK before DQ[7] is driven low.

NOTE 2 DQ[7], DMI[0] and WCK signal are required to be valid level until tMRD which is caused by MRW command to exiting this mode is satisfied.

NOTE 3 After DQ[7] is driven low and the SDRAM samples the LOW level of DQ[7] by WCK toggle, the SDRAM ODT_CA will revert to the state/value defined by FSP-OP prior to Command Bus Training mode entry, i.e. the original frequency set point (FSP-OP).
Example: If the SDRAM was using FSP-OP[x], FSP-OP[y] or FSP-OP[z] for training, then it will switch to FSP-OP[x] after DQ[7] is driven LOW and sampled LOW level by WCK toggle.

NOTE 4 Training values are not retained by the SDRAM, and must be written to the FSP-OP register set before returning to operation at the trained frequency. Example: VREFCA will return to the value programmed in the original set point.

NOTE 5 WCK doesn't need to synchronize with clock signal during CBT mode.

Figure 41 - Exiting Command Bus Training Mode(Command-based ZQ Calibration)

4.2.2 CA VREF Training

TBD

4.2.3 DQ VREF Training

TBD

4.2.4 WCK2CK Leveling

4.2.4.1 WCK2CK Leveling Mode (write-leveling called in LPDDR4)

To adjust CK-to-WCK relationship and guarantee WCK2CK-Sync. operation, the LPDDR5 SDRAM provides a WCK2CK Leveling feature to compensate CK-to-WCK timing skew affecting WCK2CK-Sync. operation. The SDRAM compares the phase of the rising edge of WCK and the rising edge of CK, then asynchronously feeds back to the memory controller for the WCK2CK phase detection result. After finishing WCK2CK Leveling, tWCK2CK which means CK-to-WCK relationship is determined and WCK2CK-Sync. operation will be performed with the optimized margin.

The memory controller references WCK2CK-Sync feedback to adjust CK-to-WCK relationship for each WCK_t/WCK_c signal pair. All data bits (DQ[7:0] for WCK_t[0]/WCK_c[0], and DQ[15:8] for WCK_t[1]/WCK_c[1]) carry the training feedback to the controller.
CKR mode is required to be set 2:1 prior to entering WCK2CK leveling.
The LPDDR5 SDRAM enters into WCK2CK Leveling mode when mode register MR18-OP[6] is set HIGH. When WCK2CK Leveling mode is entered, the state of the DQ pins is undefined. During WCK2CK Leveling mode, only DESELECT commands are allowed, or MRW command to exit the WCK2CK Leveling operation. Upon completion of the WCK2CK Leveling, the SDRAM exits from WCK2CK Leveling mode when MR18-OP[6] is reset LOW.
WCK2CK Leveling should be performed before write training.
WCK2CK Leveling examples are shown in **Figure 42** and **Figure 43**, and the specific descriptions for the figures will be provided in the following section.

4.2.4.2 WCK2CK Leveling Procedure and Related AC parameters

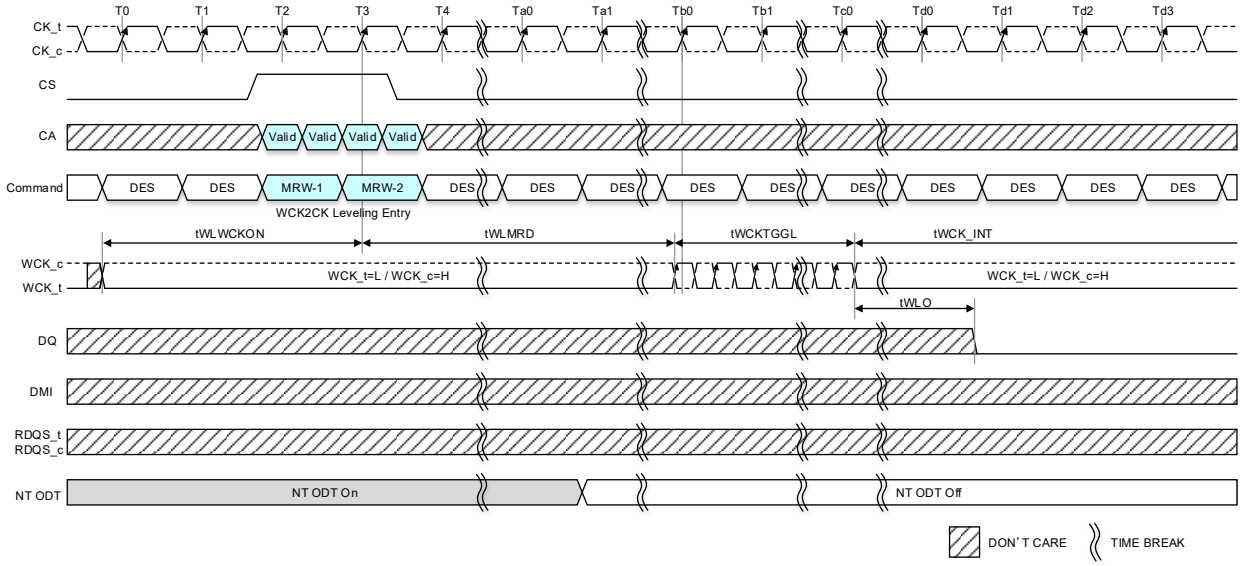

NOTE 1 WCK must be driven tWLWCKON earlier than WCK2CK leveling entry.
NOTE 2 WCK must toggle exactly 7.5 cycles (tWCKTGGL= 7.5tWCK).
NOTE 3 WCK2CK phase detection result on DQ bus is low because WCK phase is earlier than CK phase.
NOTE 4 In this example the NT ODT is enabled.

Figure 42 - WCK2CK Leveling entry and leveling result output

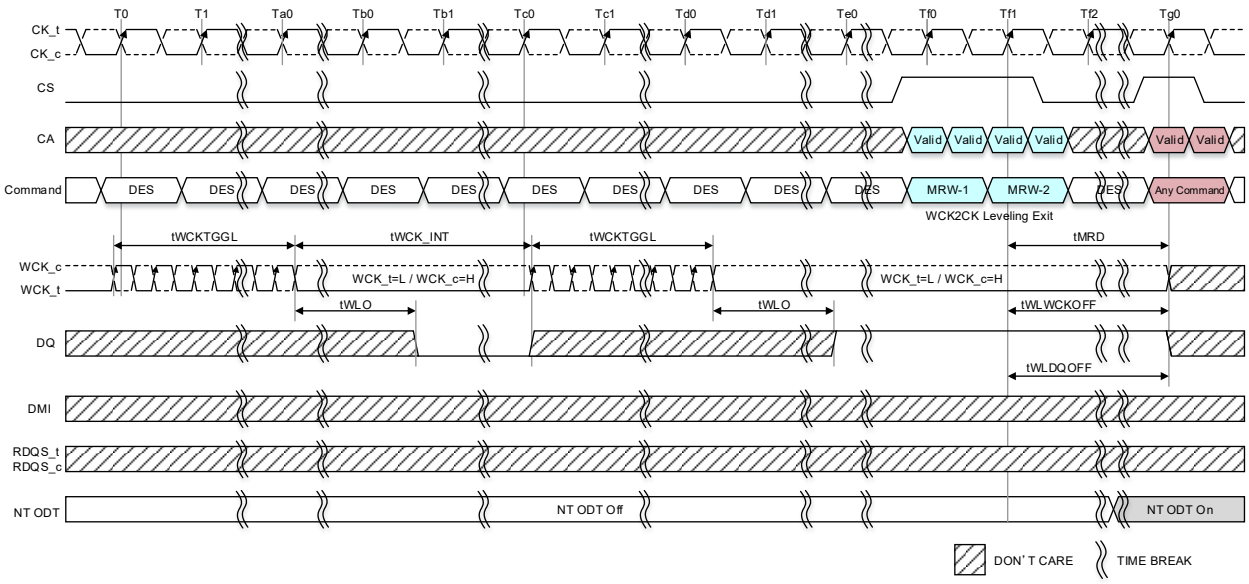

NOTE 1 DQ output transit from low to high when WCK phase starts to be later than CK phase.
NOTE 2 Controller is allowed to change WCK phase only when it is driving WCK_t=L/WCK_c=H.
NOTE 3 WCK must toggle exactly 7.5 cycles (tWCKTGGL=7.5tWCK).
NOTE 4 In this example the NT ODT is enabled.

Figure 43 - Consecutive WCK2CK Leveling and WCK2CK leveling Exit

1. Start to drive WCK_t LOW and WCK_c High.
2. Enter into WCK2CK Leveling mode by setting MR18-OP[6]=1_B. In WCK2CK leveling mode, the WCK to CK frequency ratio must be 2:1, because the frequency of WCK preamble is 2 times of CK regardless of WCK2CK mode (4:1 or 2:1).
   NT-ODT will be disabled even though NT-ODT is enabled by MR11 OP[3] and MR41 OP[7:5]: NT DQ ODT.
3. Wait for a time tWLMRD before providing the first WCK signal toggle input. The delay time tWLMRD(MAX) is controller dependent.
4. Toggle WCK signal 7.5 cycles for WCK2CK phase detection. SDRAM may or may not capture the first rising edge of WCK_t due to an unstable first rising edge. Hence providing exactly 7.5 cycles of WCK signal input is required in every WCK input signal during WCK2CK training mode.
   SDRAM provides asynchronous feedback of last captured WCK2CK phase information during WCK toggles, on all the DQ bits after time tWLO. DQ output is low if WCK phase is earlier than CK phase and high if WCK phase is later than CK phase. The controller must sample the phase relation result on DQ after satisfying tWLO.
5. The feedback provided by the SDRAM is referenced by the controller to increment or decrement the WCK_t and WCK_c delay setting. The controller can adjust the WCK delay setting only when it drives WCK_t LOW and WCK_c HIGH to prevent any glitches in WCK signal. WCK search range from controller is defined as tWCK2CK_leveling ac parameter. Refer to the tWCK2CK_leveling value in **Table 30**.
6. Repeat step 4 through step 5 until the proper WCK_t/WCK_c delay is established.
7. Exit from WCK2CK Leveling mode by setting MR18-OP[6]=0_B.
   NT-ODT will come back to enable if NT-ODT is enabled by MR11 OP[3] and MR41 OP[7:5]: NT DQ ODT.

Table 30 - WCK2CK Leveling Timing Parameters

Parameter	Symbol	Min/ Max	Value	Units	Notes
WCK_t/WCK_c drive start to WCK2CK leveling mode entry	tWLWCKON	Min	2	tCK	
First WCK_t/WCK_c edge After WCK2CK leveling mode is programmed	tWLMRD	Min	Max(14ns,5tCK)	ns	
Write Leveling output delay	tWLO	Min	0	ns	
		Max	Max(2tCK,20ns)	ns	
WCK toggle interval	tWCK_INT	Min	Max(25ns, 2.5tWCK)	ns	
WCK off delay after write leveling mode exit	tWLWCKOFF	Min	Max(14ns,5tCK)	ns	
DQ off delay after write leveling mode exit	tWLDQOFF	Max	Max(14ns,5tCK)	ns	
WCK cycle per WCK2CK phase detection	tWCKTGGL	Min	7.5	tWCK	1
		Max	7.5	tWCK	1
WCK to CK phase offset	tWCK2CK	Min	Max(-0.5*tWCK,-TBDps)	ps	2
			Max(-0.25*tWCK,TBDps)		3
		Max	Min(0.5*tWCK,TBDps)	ps	2
			Min(0.25*tWCK,TBDps)		3
WCK2CK leveling phase search range	tWCK2CK_Leveling	Min	Max(-0.5*tWCK,-TBDps)	ps	4
		Max	Min(0.5*tWCK,TBDps)	ps	4

NOTE 1 7.5 WCK cycles are required per WCK2CK phase detection.
NOTE 2 Applied when CKR is 4:1 mode(MR18 OP[7]=0).
NOTE 3 Applied when CKR is 2:1 mode(MR18 OP[7]=1).
NOTE 4 SDRAM will return correct tWCK2CK phase relation information in WCK2CK leveling mode within the range specified. However, the maximum WCK to CK phase shift allowed for SDRAM normal operation may be limited by tWCK2CK.

4.2.5 Duty Cycle Adjuster (DCA)

LPDDR5 SDRAM supports a mode-register-adjustable WCK DCA to allow the memory controller to adjust the DRAM internal WCK clock tree duty cycle to compensate for systemic duty cycle error. A separate DCA is provided for each byte, (DCAL for the Lower Byte adjustment and DCAU for the Upper Byte adjustment.).

The WCK DCA is located before the WCK divider or equivalent place. The WCK DCA will affect WCK duty cycle during the following operations:

- Read
- Read32
- Write
- Write32
- Masked Write
- Mode Register Read
- Read FIFO
- Write FIFO
- Read DQ Calibration
- Duty Cycle Monitor

The controller can adjust the duty cycle through the MR30 OP[3:0] for DCAL and MR30 OP[7:4] for DCAU setting and can determine the optimal Mode Register setting for DCA in multiple different ways.

This function adjusts the SDRAM internal WCK duty cycle (Static).

4.2.5.1 Duty Cycle Adjuster Range

The step range between the step 0 to 7 (-7) is as follows. The difference of actual value between step N and step N+1 cannot be defined, since the variation of duty cycle by changing DCA code is not linear.

Table 31 — DCA Range

Parameter	Min/Avg./Max	Value	Unit	Notes
Duty Cycle Adjuster Range	Min	TBD	ps	1
	Max	TBD		
NOTE 1 These values are guaranteed by design.				

Table 32 — Duty Cycle Adjuster Range

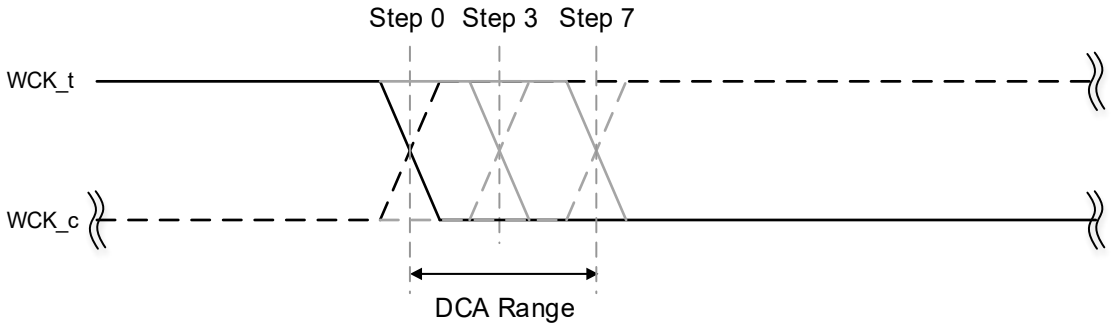

4.2.5.2 Relationship between WCK waveform and DCA Code Change

The basic operation of the DAC code change is as follows.

After DCA code change, it is recommended to re-execute WCK2CK leveling.

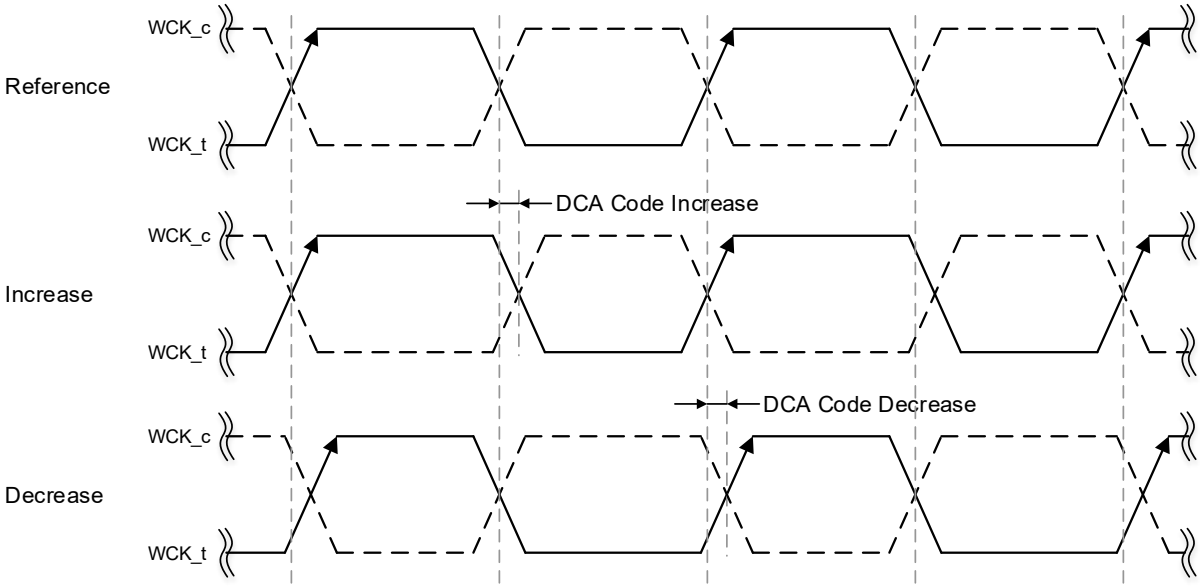

NOTE 1 Refer to the write clock specification section, 15.2, for the definition of tWCKH(avg) and tWCK(avg)

Figure 44 — Relationship between WCK waveform and DCA Code Change (Example)

4.2.5.3 The relationship between DCA Code Change and DQ output/RDQS timing

The WCK DCA code change effect to DQ Output and RDQS are as follows. The rising edge of WCK_t affects to the rising edge of RDQS_t and the even data output. The falling edge of WCK_t affects to the falling edge of RDQS_t and the odd data output. The complimentary signal (WCK_c and RDQS_c) is the same as the true signal.

The relationship between the DCA code change and delay time variation (Delay_R/F) only can define in a qualitative manner.

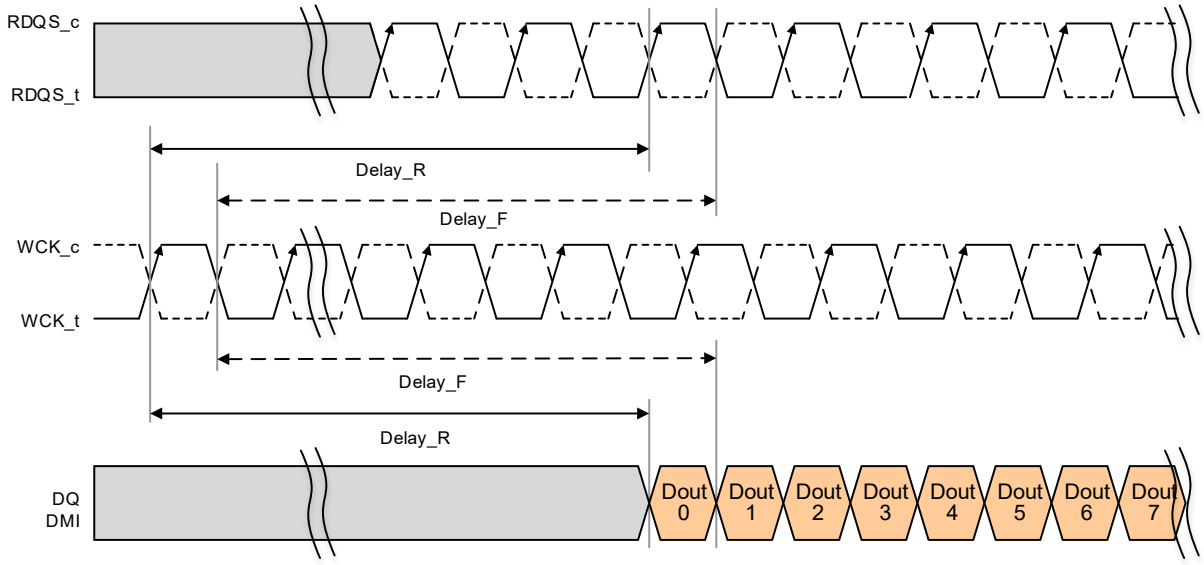

Figure 45 — Relationship between WCK waveform and DQS_t/c and DQ output (Example)

4.2.6 Duty Cycle Monitor (DCM)

4.2.6.1 DCM Functional Description

LPDDR5 SDRAM devices feature a duty cycle monitor (DCM) to allow the memory controller to monitor WCK duty cycle distortion in the DRAM internal WCK clock tree. Both lower and upper bytes perform the DCM function simultaneously when DCM is enabled. Two separate duty cycle results are provided for each byte: DCML0 and DCML1 for the Lower Byte and DCMU0 and DCMU1 for the Upper Byte.

DCM operation is initiated by writing MR26 OP[0] = 1b. Setting MR26 OP[0] = 0b terminates DCM operation. Prior to initiating DCM operation, WCK2CK SYNC – Fast Sync operation shall be performed in accordance with section 7.2.1 “LPDDR5 WCK2CK Synchronization Operation.” Continuous toggling WCK input is required while DCM operation is enabled until TBD after DCM operation is halted by writing MR26 OP[0] = 0b.

Table 33 MR26 Register Information (MA[7:0] = $1A_H$)

OP[7]	OP[6]	OP[5]	OP[4]	OP[3]	OP[2]	OP[1]	OP[0]
RFU		DCMU1	DCMU0	DCML1	DCML0	DCM Flip	DCM Start/Stop

Table 34 MR26 definition

Function	Register Type	Operand	Data	Note
Duty cycle result for upper byte when DCM Flip=1 (DCMU1)	Read	OP[5]	0b: High duty cycle < 50% for upper byte	
			1b: High duty cycle > 50% for upper byte	
Duty cycle result for upper byte when DCM Flip=0 (DCMU0)		OP[4]	0b: High duty cycle < 50% for upper byte	
			1b: High duty cycle > 50% for upper byte	
Duty cycle result for lower byte when DCM Flip=1 (DCML1)		OP[3]	0b: High duty cycle < 50% for lower byte	
			1b: High duty cycle > 50% for lower byte	
Duty cycle result for lower byte when DCM Flip=0 (DCML0)		OP[2]	0b: High duty cycle < 50% for lower byte	
			1b: High duty cycle > 50% for lower byte	
Flip inputs to cancel offset(DCM_Flip)	Write	OP[1]	0b: No flip (default)	
			1b: Flip	
DCM_Start/Stop		OP[0]	0b: Stop (default)	
			1b: Start	

DCM results may be inaccurate if DCM circuit hysteresis is present. To increase the accuracy of this function, the DCM supports flipping the input by setting MR26 OP[1] to the opposite state and then repeating the measurement.
MRW[DCM Flip] and MRW[DCM Stop] will capture the DCM results. The DCM result is determined by the state of DCM Flip bit (MR26 OP[1]).

- DCM Flip = 0: DCML0 and DCMU0 will be used
- DCM Flip = 1: DCML1 and DCMU1 will be used

The DCM circuit monitors both read/write WCK clock path. DCM requires higher than 1600MHz WCK.

4.2.6.2 DCM Sequence

DCM training is expected to be done after CBT and WCK2CK Leveling to ensure that MRW and MRR operation can be reliably performed. Below is a DCM sequence that examines the duty cycle of the WCK path:

1. Update the FSP settings.
2. Issue a CAS command with WS_FS=1 to toggle WCK at full-rate before DCM starts.
3. Issue MRW-1 and MRW-2 to start DCM.
4. Wait tDCMM for the DCM to complete duty cycle measurement.
5. Issue MRW-1 and MRW-2 to switch MR26 OP[1] to flip the inputs of DCM.
   5.1. Transitioning the flip bit from a logic low to a logic high will automatically:
      5.1.1. Capture the current DCM results
      5.1.2. Store the DCM results in MR26 OP[2]/MR26 OP[4]
      5.1.3. Reset and restart the DCM
   5.2. Transitioning the flip bit from a logic high to a logic low will automatically:
      5.2.1. Capture the current DCM results
      5.2.2. Store the DCM results in MR26 OP[3]/MR26 OP[5]
      5.2.3. Reset and restart the DCM
6. Wait tDCMM for the DCM to complete duty cycle measurement with the flipped inputs
7. Exit DCM by issuing MRW-1 and MRW-2 to the LPDDR5 SDRAM device.
   7.1. This automatically captures and stores the current DCM results in MR26 OP[2]/MR26 OP[4] when MR26 OP[1] is a logic low.
   7.2. This automatically captures and stores the current DCM results in MR26 OP[3]/MR26 OP[5] when MR26 OP[1] is a logic high.
8. MR26 OP[5:2] can be read out by issuing an MRR after Tf0 using normal MRR timing.

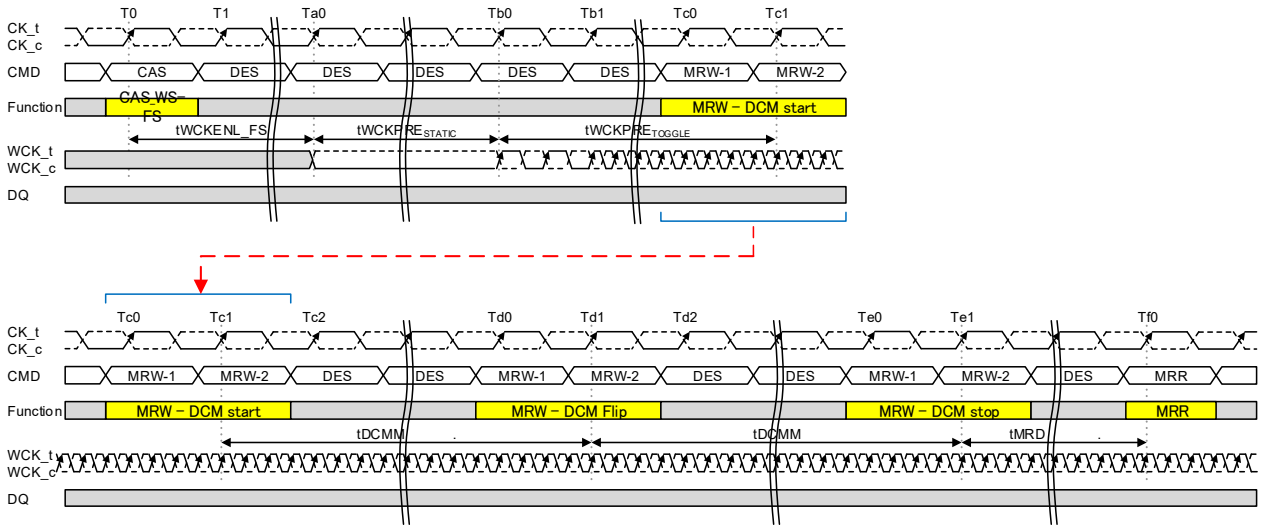

Figure 2: DCM timing example

Following table explains MR26 OP[1] and DQ relationship. MR26 OP[1] don't impact MR26 OP[5:2] output polarity.

Table 35 DCM output example

Comp Output 0 :< 50% 1 : >= 50%	DCA Code	-7	-6	-5	-4	-3	-2	-1	0	+1	+2	+3	+4	+5	+6	+7
	No Flip	0	0	0	0	0	0	1	1	1	1	1	1	1	1	1
	Flip	0	0	0	0	0	0	0	0	0	1	1	1	1	1	1

Table 36 Duty cycle monitor timing

Parameter	Symbol	Min/ Max	WCK Frequency (MHz)							Unit	Note
			1600	1867	2134	2400	2750	3000	3200		
Duty Cycle Monitor Measurement time	tDCMM	MIN	2							us	

4.2.7 READ DQ Calibration

The LPDDR5 SDRAM devices feature a READ DQ Calibration training function that outputs a 16-bit user-defined pattern on the DQ pins. READ DQ Calibration is initiated by issuing a READ DQ CALIBRATION (RDC) command, cause the LPDDR5 SDRAM to drive the contents of MR33 followed by the contents of MR34 on each of DQ[15:0] and DMI[1:0]. The pattern can be either inverted or low-fixed on selected DQ pins according to user-defined invert masks or output data fix0 written to MR31 and MR32. The selection of either inverted or low-fixed is decided based on MR20.

4.2.7.1 READ DQ Calibration Training Procedure

The procedure for executing READ DQ Calibration is:

- Issue MRW commands to write MR33 (first eight bits), MR34 (second eight bits), MR20 (selection of either inverted or output fix0), MR31/32 (eight-bit invert mask or output data fix0 for byte0/1).
  - Optionally this step could be skipped to use the default patterns.
    - MR31 default = 55_H
    - MR32 default = 55_H
    - MR33 default = $5A_H$
    - MR34 default = $3C_H$

- RD DQ Calibration is initiated by issuing Read DQ Calibration (RDC) command while in a WCK2CK SYNC state.
  - Each time an RDC command is received by the LPDDR5 SDRAM, a 16-bit data burst will, after the currently set RL, drive the eight bits programmed in MR33 followed by the eight bits programmed in MR34 on all I/O pins. CAS command (WS_RD = 1) is not required as long as WCK2CK-sync state is kept.
  - When MR20 OP[7] = 0, the data pattern will be inverted for I/O pins with a '1' programmed in the corresponding invert mask mode register bit.
  - When MR20 OP[7] = 1, the data pattern will be low-fixed for IO pins with a '1' programmed in the corresponding output data fix0 mode register bit (see Table 37 and Table 38). The DMI pattern will be low-fixed when MR20 OP[6] = 1.
  - Note that the pattern is driven on the DMI pins, but no data bus inversion function is enabled, even if Read DBI is enabled in the DRAM mode register.
  - The RDC command can be issued every tCCD seamlessly, and tRTRRD delay is required between Array Read command and the RDC command as well the delay required between the RDC command and an array read.
  - The operands received with the CAS command must be driven LOW except WS_RD.
  - The function set by previous CAS operands is ignored. (DC0~3 and B3 are ignored.)

- DQ Read Training can be performed with any or no banks active, during Refresh, or during SREF without Power Down.

- In case of byte mode, MR31 is valid only for lower byte selected device, and MR32 is valid only for upper byte selected device.

4.2.8.1 READ DQ Calibration Training Procedure (Cont'd)

Table 37 — Invert Mask or output data fix0 Assignments in X16 Mode

DQ Pin	Pattern selects MR20 OP[7]	OP0	OP1	OP2	OP3	OP4	OP5	OP6	OP7
MR31	0	DQ0 invert	DQ1 invert	DQ2 invert	DQ3 invert	DQ4 invert	DQ5 invert	DQ6 invert	DQ7 invert
	1	DQ0 Fix0	DQ1 Fix0	DQ2 Fix0	DQ3 Fix0	DQ4 Fix0	DQ5 Fix0	DQ6 Fix0	DQ7 Fix0
MR32	0	DQ8 invert	DQ9 invert	DQ10 invert	DQ11 invert	DQ12 invert	DQ13 invert	DQ14 invert	DQ15 invert
	1	DQ8 Fix0	DQ9 Fix0	DQ10 Fix0	DQ11 Fix0	DQ12 Fix0	DQ13 Fix0	DQ14 Fix0	DQ15 Fix0

Table 38 — Invert Mask or output data fix0 Assignments in X8 Mode

DQ Pin	Pattern select MR20 OP[7]	OP0	OP1	OP2	OP3	OP4	OP5	OP6	OP7
MR31	0	DQ0 invert	DQ1 invert	DQ2 invert	DQ3 invert	DQ4 invert	DQ5 invert	DQ6 invert	DQ7 invert
	1	DQ0 Fix0	DQ1 Fix0	DQ2 Fix0	DQ3 Fix0	DQ4 Fix0	DQ5 Fix0	DQ6 Fix0	DQ7 Fix0

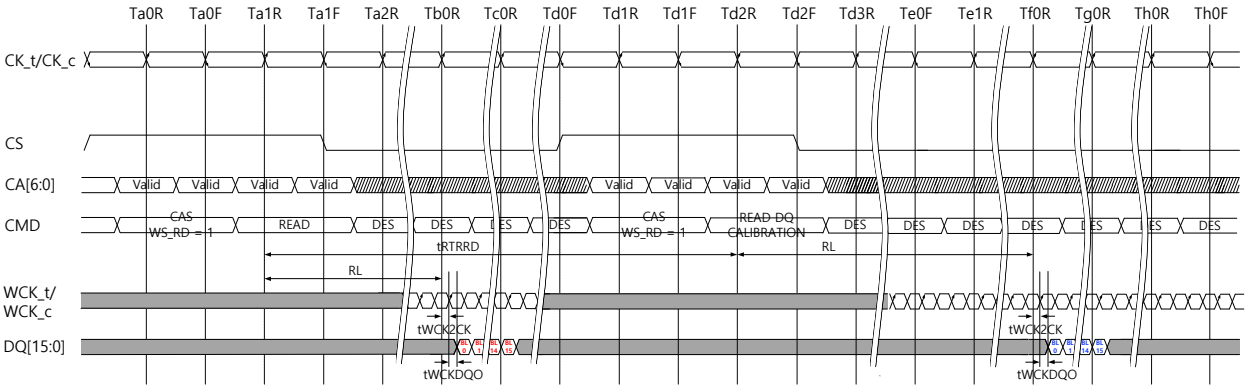

NOTES - 1. READ to READ DQ CALIBRATION operation is shown as an example of command to command timing. Timing from READ to READ DQ CALIBRATION is tRTRRD.
2. READ DQ CALIBRATION uses the same command to data timing relationship as READ command.
3. If WCK_t/WCK_c have been Hi-Z state prior to issuing READ DQ CALIBRATION command, WCK2CK Sync operation must be executed. READ DQ CALIBRATION uses the same timing relationship with the WCK2CK Sync operation as READ command.
4. BL=16.
5. DES commands are shown for ease of illustration; other commands may be valid at these times.

Figure 46 — Read DQ Calibration Timing: Read to Read DQ Calibration

4.2.8.1 READ DQ Calibration Training Procedure (Cont'd)

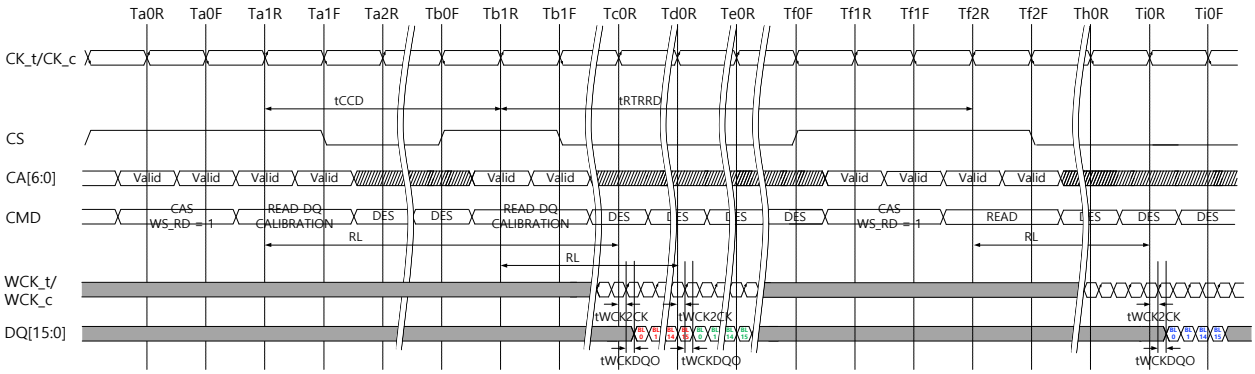

NOTES - 1. READ DQ CALIBRATION to READ DQ CALIBRATION operation is shown as an example of command to command timing. Seamless READ DQ CALIBRATION commands may be executed by repeating the command every tCCD time.
2. READ DQ CALIBRATION to READ operation is shown as an example of command to command timing. Timing from READ DQ CALIBRATION to READ is tRTRRD.
3. READ DQ CALIBRATION uses the same command to data timing relationship as READ command.
4. If WCK_t/WCK_c have been Hi-Z state prior to issuing READ DQ CALIBRATION command, WCK2CK Sync operation must be executed. READ DQ CALIBRATION uses the same timing relationship with the WCK2CK Sync operation as READ command.
5. BL=16.
6. DES commands are shown for ease of illustration; other commands may be valid at these times.

Figure 47 — Read DQ Calibration Timing: Read DQ Calibration to Read DQ Calibration

4.2.7.2 READ DQ Calibration Example

An example of READ DQ Calibration Training output is shown in Table 39 and Table 40. This shows the 16-bit data pattern that will be driven on each DQ when one READ DQ CALIBRATION command is executed. This output assumes the following mode register values are used.

- MR31 default = 55_H
- MR32 default = 55_H
- MR33 default = $1C_H$
- MR34 default = 59_H

Table 39 — Read DQ Calibration Bit Ordering, Inversion, output data fix0 example for DQ

PIN	MR20 OP[7]	DQ Invert	DQ output Data fix0	Bit Sequence															
				15	14	13	12	11	10	9	8	7	6	5	4	3	2	1	0
DQx	0	Yes	-	1	0	1	0	0	1	1	0	1	1	1	0	0	0	1	1
		No	-	0	1	0	1	1	0	0	1	0	0	0	1	1	1	0	0
	1	-	Yes	0	0	0	0	0	0	0	0	0	0	0	0	0	0	0	0
		-	No	0	1	0	1	1	0	0	1	0	0	0	1	1	1	0	0

4.2.8.2 READ DQ Calibration Example (Cont'd)

Table 40 — Read DQ Calibration Bit Ordering, Inversion, output data fix0 example for DMI

PIN	MR 20 OP [6]	DMI output Data fix0	Bit Sequence →															
			15	14	13	12	11	10	9	8	7	6	5	4	3	2	1	0
DMI	0	No	0	1	0	1	1	0	0	1	0	0	0	1	1	1	0	0
	1	Yes	0	0	0	0	0	0	0	0	0	0	0	0	0	0	0	0

NOTE 1 The patterns contained in MR33 and MR34 are transmitted on DQ[15:0] and DMI[1:0] when READ DQ Calibration is initiated by a READ DQ CALIBRATION command. The pattern transmitted serially on each data lane, organized that the low-order bit in a byte is transmitted first. If the data pattern is 27_H, then the first bit transmitted will be a '1', followed by '1', '1', '0', '0', '1', '0', and '0'. The bit stream will be 00100111(→).

NOTE 2 MR31 and MR32 may be used to invert the MR33/ MR34 data pattern on the DQ pins. See MR31 (Table 125) and MR32 (Table 128) for more information. There is no inversion function for DMI[1:0] pin data streams.

NOTE 3 No Data Bus Inversion (DBI) function is enacted during READ DQ CALIBRATION, even if DBI is enabled.

4.2.7.3 READ DQ Calibration after Power Down Exit

Following the power down state, an additional time, tMRRI, is required prior to issuing the READ DQ CALIBRATION command. This additional time (equivalent to tRCD) is required in order to be able to maximize power down current savings by allowing more power-up time for the Read DQ data in MR33 and MR34 data path after exit from standby, power down mode.

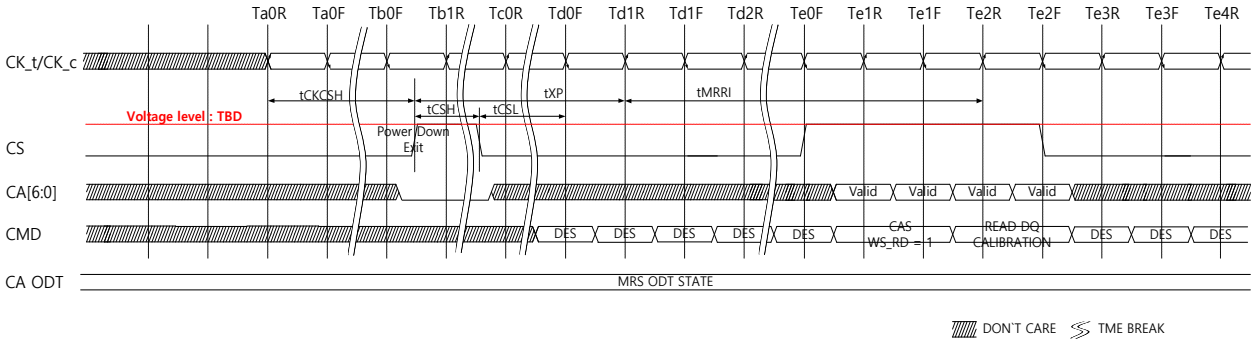

Figure 48 — READ DQ CALIBRATION following Power Down State

4.2.7.4 DMI Behavior Control for RDC

LPDDR5 SDRAM supports DMI output behavior control at Read DQ Calibration Command as optional function. MR0 OP[4] indicates whether DMI output behavior control is supported or not. If MR0 OP[4]=1_B, DMI input/output behavior control mode can be selected MR13 OP[4].

- MR0 OP[4]=0_B
  Only mode 1 is supported.
- MR0 OP[4]=1_B
  Mode 1 and Mode 2 can be selectable.

The outline of Mode 1 and Mode 2.

- Mode1: MR13 OP[4]=0_B
  DMI Output behavior follows MR setting Read DBI, Read Link ECC and Read Data Copy.
- Mode 2: MR13 OP[4]=1_B
  DMI outputs a valid data, if Read FIFO Command and Read DQ Calibration Command is issued when Data Mask and/or Write DBI are enabled even though Read DBI, Read Link ECC and Read Data Copy are disabled.

4.2.7.4.1.1 DMI Output Behavior Mode 1

Table 41 - DMI Output behavior and Read Latencies for Read DQ Cal. command

Function			DMI Output Behavior	Read Latencies		Note
Read DBI MR3 OP[6]	Read Link ECC MR22 OP[7:6]	Read Data Copy MR21 OP[5]		x16	x8	
Disable	Disable	Disable	Driver is turned off	Set 0	Set 1	1
Disable	Disable	Enable	RDC Data Output	Set 1	Set 2	1
Disable	Enable	Disable	RDC Data Output	Set 0	Set 1	2
Disable	Enable	Enable	Prohibited setting	N/A	N/A	
Enable	Disable	Disable	RDC Data Output	Set 1	Set 2	1
Enable	Disable	Enable	RDC Data Output	Set 1	Set 2	1
Enable	Enable	Disable	Prohibited setting	N/A	N/A	
Enable	Enable	Enable	Prohibited setting	N/A	N/A	

NOTE 1 For Read latency set, refer to the table where Read Link ECC function is disabled.
NOTE 2 For Read latency set, refer to the table where Read Link ECC function is enabled.

4.2.7.4.1.2 DMI Output Behavior Mode 2

Table 42 - Relationship between MR setting and DMI behavior for RDC command

Function					DMI Output Behavior	Read Latency		Notes
Data Mask MR13 OP[5]	Write DBI MR3 OP[7]	Read DBI MR3 OP[6]	Read Link ECC MR22 OP[7:6]	Read Data Copy MR21 OP[5]	Read DQ Cal. Command	x16	x8	
Disable	Disable	Disable	Disable	Disable	Driver is turned off	Set 0	Set 1	1
Disable	Enable	Disable	Disable	Disable	RDC Data output	Set 0	Set 1	1
Enable	Disable	Disable	Disable	Disable	RDC Data output	Set 0	Set 1	1
Enable	Enable	Disable	Disable	Disable	RDC Data output	Set 0	Set 1	1

NOTE 1 For Read latency set, refer to the table where Read Link ECC function is disabled.
NOTE 2 See DMI pin behavior table for the rest of MR combination.

4.2.8 WCK-DQ Training

The LPDDR5 SDRAM uses an un-matched WCK-DQ path to enable high speed performance and save power in the SDRAM. As a result, WCK is required to be trained to arrive at the DQ latch center-aligned with the Data eye. The SDRAM DQ receiver is located at the DQ pad, and has a shorter internal delay in the SDRAM than does the WCK signal. The SDRAM DQ receiver will latch the data present on the DQ bus when WCK reaches the latch, and training is accomplished by delaying the DQ signals relative to WCK such that the Data eye arrives at the receiver latch centered on the WCK transition.
The LPDDR5 SDRAM provides a Command-based FIFO Write/Read training operation using user specific pattern. Basically, DMI will be treated the same as DQs. It means that the Write Data send to FIFO for DMI by WFF command and these data can be read-out from FIFO for DMI by RFF command. On the other hands, DMI behavior is not same as DQs in some cases. Refer to the details about the special DMI behavior which are to be described later in this section.

4.2.8.1 Training procedure

To perform Write Training, the controller is required to be issued the CAS command with WS_WR=1 followed immediately by the Write FIFO command to write data into the FIFO. Timing for the CAS and the Write FIFO command are identical to the CAS and the Write command. Up to 8 consecutive Write FIFO commands with user defined patterns may be issued to the SDRAM to store up to 128 values (BL16 x 8) per pin that can be read back via the Read FIFO command.
The burst length of the Write FIFO and the Read FIFO command is limited to BL16 regardless Bank architecture: BG, 16B and 8B mode.
The Write/Read FIFO Pointer operation is described later in this section.

After writing data to the SDRAM with the Write FIFO command, the data can be read back with the Read FIFO command and results compared with “expect” data to see if further training is needed. To read back the data, the controller is required to issue a CAS command with WS_RD=1 followed immediately by the Read FIFO command to read back data from FIFO. Timing for the CAS and the Read FIFO command are identical to the CAS and the Read command.

The Read FIFO operation is non-destructive to the data captured in the FIFO, so data may be read continuously until it is overwritten by the Write FIFO command. For example: If 8 Write FIFO commands are executed sequentially, then a series of Read FIFO commands will read valid data from FIFO[0], FIFO[1]….FIFO[7], and will then wrap back to FIFO[0] on the next Read FIFO. If fewer than 8 Write FIFO commands were executed, then unwritten registers will have un-defined (but valid) data when read back. For instance, if fewer than 8 Write FIFO commands are executed sequentially (example=3), then a series of Read FIFO commands will return valid data for FIFO[0], FIFO[1], and FIFO[2], however the next (8-3) Read FIFO commands will return un-defined data for FIFO[3] through FIFO[7] before wrapping back to the valid data in FIFO[0].

During WCK-DQ Training, only the following commands are allowed to prevent an overwrite of the Write and Read FIFO and to simplify this training procedure.
- CAS_WR, CAS_RD, CAS_FS and CAS_OFF
- Read FIFO
- Write FIFO
- DES
- NOP

- Refresh (All bank and Per bank)
- Mode Register Write for FSP-WR: MR16 OP[1:0], FSP-OP: MR16 OP[3:2] and VRCG: MR16 OP[6].

WCK-DQ Training can be started at Idle, Bank active, during refresh or Self Refresh of the SDRAM. WCK-DQ Training can be ended when the FIFO pointer is the same value between Write and Read FIFO.

4.2.8.1.1 Relationship between MR setting and FIFO training behavior

Write FIFO and the Read FIFO command can be issued regardless of following MR setting.

- MR13 OP[5]: Data Mask
- MR3 OP[7]: Write DBI
- MR22 OP[5:4]: Write Link ECC
- MR3 OP[6]: Read DBI
- MR22 OP[7:6]: Read Link ECC
- MR21 OP[5]: Read Data Copy

However, above-mentioned MR setting affects Read Latencies, and/or DMI pin behavior. Refer to **Table 43** for detail.

Table 43 - Relationship between MR setting and FIFO behavior

Subject	x16 Device	x8 Device	Note
MR13 OP[5]: Data Mask	Function Disable	Function Disable	1
MR3 OP[7]: Write DBI	Function Disable	Function Disable	2
MR22 OP[5:4]: Write Link ECC	Function Disable	Function Disable	3
MR3 OP[6]: Read DBI	Function Disable	Function Disable	4
MR22 OP[7:6]: Read Link ECC	Function Disable	Function Disable	5
MR21 OP[5]: Read Data Copy	Function Disable	Function Disable	6
Read Latency	Follow MR setting	Follow MR setting	7
	Follow DVFSC setting	Follow DVFSC setting	

NOTE 1 Input data from DMI does not affect the input data to DQs, if MR13 OP[5]=0_B.
NOTE 2 Input data from DMI does not affect the input data to DQs, if MR3 OP[7]=1_B.
NOTE 3 Input data from RDQS_t and errors on Write FIFO commands will be ignored, if MR22 OP[5:4]=01_B.
NOTE 4: The data written in the FIFO of DMI is output as it is regardless of MR3 OP[6] setting.
NOTE 5 The data written in the FIFO of DMI is output as it is regardless of MR22 OP[7:6] setting.
NOTE 6 The data written in the FIFO of DQs and DMI is output as it is regardless of MR21 OP[5] setting.
NOTE 7 Read Latency is affected by the following MR setting.
- MR3 OP[6]: Read DBI, MR21 OP[5]: Read Data Copy and MR22 OP[7:6]: Read Link ECC.

NOTE 8 The states defined the table is also applies when WCK-RDQS_t/Parity Training: MR46 OP[2]=1_B. Note 8 applies whole row of this table.

Table 44 DMI, RDQS_t/Parity Input behavior for Write FIFO command

Function				DMI Input Behavior	RDQS_t/ Parity Receiver	Note
Data Mask MR13 OP[5]	Write DBI MR3 OP[7]	Write Link ECC MR22 OP[5:4]	Write Data Copy MR21 OP[4]			
Disable	Disable	Disable	Disable	Not in use, don't care	Turn off	
Disable	Disable	Disable	Enable	Not in use, don't care	Turn off	1
Disable	Disable	Enable	Disable	Not in use, don't care	Turn on	2
Disable	Disable	Enable	Enable	Not in use, don't care	Turn on	1,2
Disable	Enable	Disable	Disable	FIFO Data Input	Turn off	
Disable	Enable	Disable	Enable	FIFO Data Input	Turn off	1
Disable	Enable	Enable	Disable	FIFO Data Input	Turn on	2
Disable	Enable	Enable	Enable	FIFO Data Input	Turn on	1,2
Enable	Disable	Disable	Disable	FIFO Data Input	Turn off	
Enable	Disable	Disable	Enable	FIFO Data Input	Turn off	1
Enable	Disable	Enable	Disable	FIFO Data Input	Turn on	2
Enable	Disable	Enable	Enable	FIFO Data Input	Turn on	1,2
Enable	Enable	Disable	Disable	FIFO Data Input	Turn off	
Enable	Enable	Disable	Enable	FIFO Data Input	Turn off	1
Enable	Enable	Enable	Disable	FIFO Data Input	Turn on	2
Enable	Enable	Enable	Enable	FIFO Data Input	Turn on	1,2

NOTE 1 CAS command with DC0, DC1, DC2 and/or DC3=1 is inhibited to FIFO Write command, even though Write Data Copy MR21 OP[4]=1_B.

NOTE 2 Valid Data input to RDQS_t/Parity pin is recommended, if MR22 OP[5:4]=01_B and/or MR46 OP[2]=1_B.

LPDDR5 SDRAM supports DMI output behavior control at Read FIFO command and Read DQ Calibration Command as optional function. MR0 OP[4] indicates whether DMI output behavior control is supported or not. If MR0 OP[4]=1_B, DMI input/output behavior control mode can be selected MR13 OP[4].

- MR0 OP[4]=0_B
  Only mode 1 is supported.
- MR0 OP[4]=1_B
  Mode 1 and Mode 2 can be selectable.

The outline of Mode 1 and Mode 2.

- Mode1: MR13 OP[4]=0_B
  DMI Output behavior follows MR setting Read DBI, Read Link ECC and Read Data Copy.
- Mode 2: MR13 OP[4]=1_B
  DMI outputs a valid data, if Read FIFO Command and Read DQ Calibration Command is issued when Data Mask and/or Write DBI are enabled even though Read DBI, Read Link ECC and Read Data Copy are disabled.

4.2.8.1.1.1 DMI Output Behavior Mode 1

Table 45 - DMI Output behavior and Read Latencies for Read FIFO command

Function			DMI Output Behavior	Read Latencies		Note
Read DBI MR3 OP[6]	Read Link ECC MR22 OP[7:6]	Read Data Copy MR21 OP[5]		x16	x8	
Disable	Disable	Disable	Not in use, don't care	Set 0	Set 1	1
Disable	Disable	Enable	FIFO Data Output	Set 1	Set 2	1
Disable	Enable	Disable	FIFO Data Output	Set 0	Set 1	2
Disable	Enable	Enable	Prohibited setting	N/A	N/A	
Enable	Disable	Disable	FIFO Data Output	Set 1	Set 2	1
Enable	Disable	Enable	FIFO Data Output	Set 1	Set 2	1
Enable	Enable	Disable	Prohibited setting	N/A	N/A	
Enable	Enable	Enable	Prohibited setting	N/A	N/A	

NOTE 1 For Read latency set, refer to the table where Read Link ECC function is disabled.
NOTE 2 For Read latency set, refer to the table where Read Link ECC function is enabled.
NOTE 3 The output data from DMI by the FIFO Read command has no meaning if DMI behavior is "Not in use, don't care" in Table 44.

4.2.8.1.1.2 DMI Output Behavior Mode 2

Table 46 - Relationship between MR setting and DMI behavior for RFF and RDC command

Function					DMI Output Behavior	Read Latency	
Data Mask MR13 OP[5]	Write DBI MR3 OP[7]	Read DBI MR3 OP[6]	Read Link ECC MR22 OP[7:6]	Read Data Copy MR21 OP[5]	Read FIFO Command	x16	x8
Disable	Disable	Disable	Disable	Disable	Not in use, don't care	Set 0	Set 1
Disable	Enable	Disable	Disable	Disable	FIFO Data Output	Set 0	Set 1
Enable	Disable	Disable	Disable	Disable	FIFO Data Output	Set 0	Set 1
Enable	Enable	Disable	Disable	Disable	FIFO Data Output	Set 0	Set 1

4.2.8.2 WCK-RDQS_t/Parity Training

When Link ECC is enabled, the RDQS_t pin will have two different functions.

1. During Read operations, RDQS_t will function as RDQS_t.
2. During Write operations RDQS_t will function as Parity.

Hence the RDQS_t pin cannot be used as the data output pin during normal WCK-DQ Training procedure.

To train the RDQS_t pin, the Read and Write FIFO commands are used with MR46 OP[2] is set to “1”. With this bit set, a Write FIFO command will allow data to be written through the RDQS_t pin. The data written via the RDQS_t pin can then be read back via the DMI by a Read FIFO command. The following MR setting is needed prior to set 1_B to MR46 OP[2]: WCK-RDQS_t/Parity Training Enabled.

- Write Link ECC: MR22 OP[5:4]=01_B
- Read Link ECC: MR22 OP[7:6]=01_B

Once MR46 OP[2] set 1_B, allowable command is as follows.

- CAS_WR, CAS_RD, CAS_FS and CAS_OFF
- Read FIFO
- Write FIFO
- DES
- NOP
- Refresh (All bank and Per bank)
- Mode Register Write for FSP-WR: MR16 OP[1:0], FSP-OP: MR16 OP[3:2], VRCG: MR16 OP[6] and MR46 OP[2].

And WCK-RDQS_t/Parity Training: MR46 OP[2]=1_B can only be used beyond 1600MHz of WCK frequency, as well as Link ECC function.

Exiting WCK-RDQS_t/Parity Training mode, MR46 OP[2] must be set to “0”.

4.2.8.3 FIFO Pointer Reset and Synchronism

The Read and Write FIFO pointers are reset under the following conditions:

- Power-up initialization
- RESET_n asserted
- Power-down entry
- Deep Sleep Mode entry
- Self Refresh Power-Down entry

The Write FIFO command advances the Write-FIFO pointer, and the Read FIFO command advances the Read-FIFO pointer. To keep the pointers aligned, the SoC memory controller must adhere to the following restriction at the end of WCK-DQ Training period:

- $b = a + (n \times c)$

Where:
'a' is the number of Write FIFO commands
'b' is the number of Read FIFO commands
'c' is the FIFO depth (=8 for LPDDR5)
'n' is a positive integer, ≥ 0

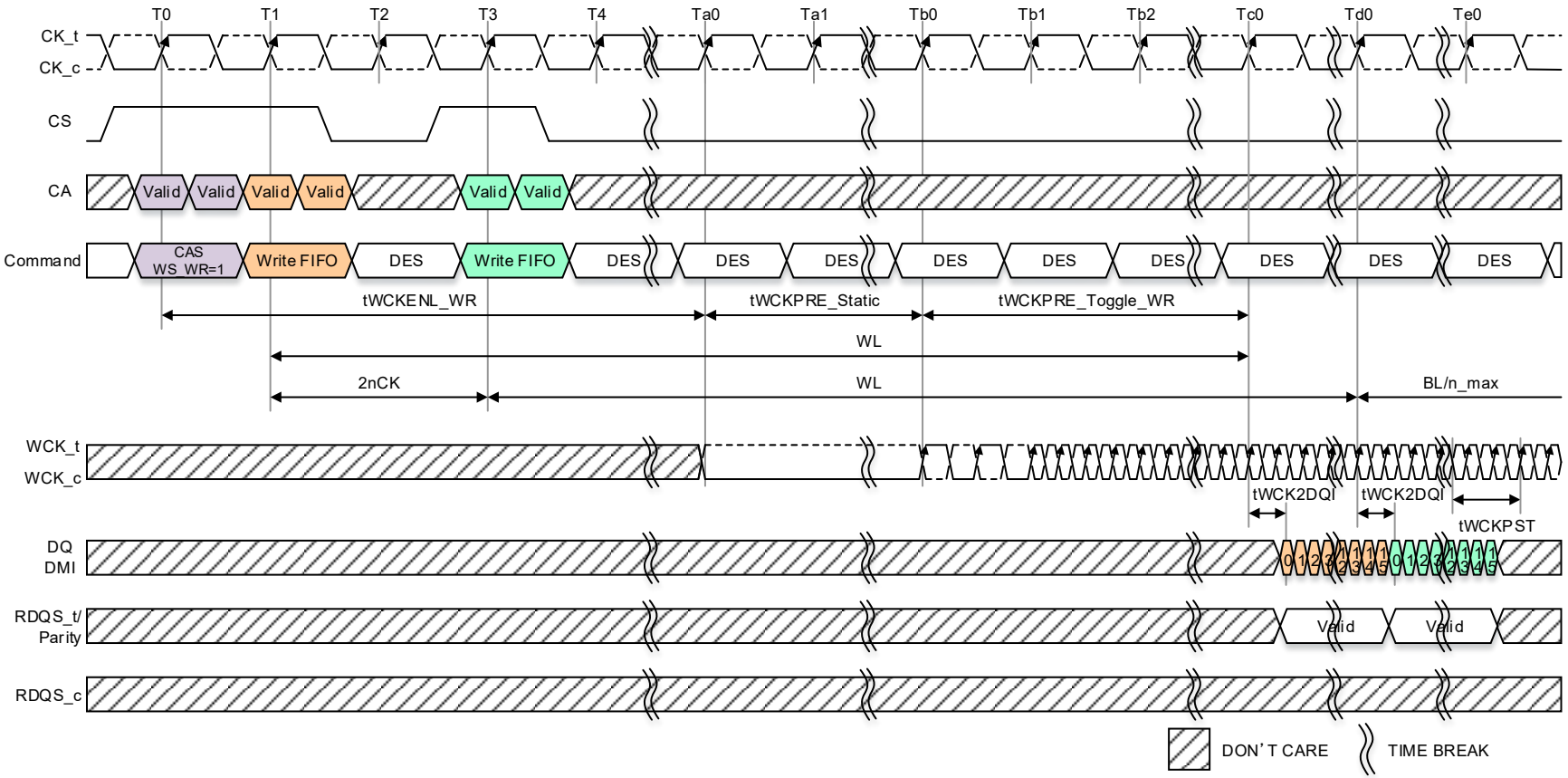

NOTE 1 tWCK2CK is 0ps in this instance.
NOTE 2 The end of both WL and tWCKPRE_Toggle_WR are the same timing in this instance.
NOTE 3 The (8 +1) Write FIFO command will overwrite the FIFO data from the first command. If fewer than 8 Write FIFO commands are executed, then the remaining FIFO locations will contain undefined data.
NOTE 4 CAS command is needed before a Write FIFO command when a WCK synchronization will expire.
NOTE 5 In case where the input receiver of RDQS_t/Parity and DMI are enabled by MR setting.

Figure 49 - Consecutive Write FIFO Operation timing for BG mode: CKR (WCK vs. CK) = 4:1

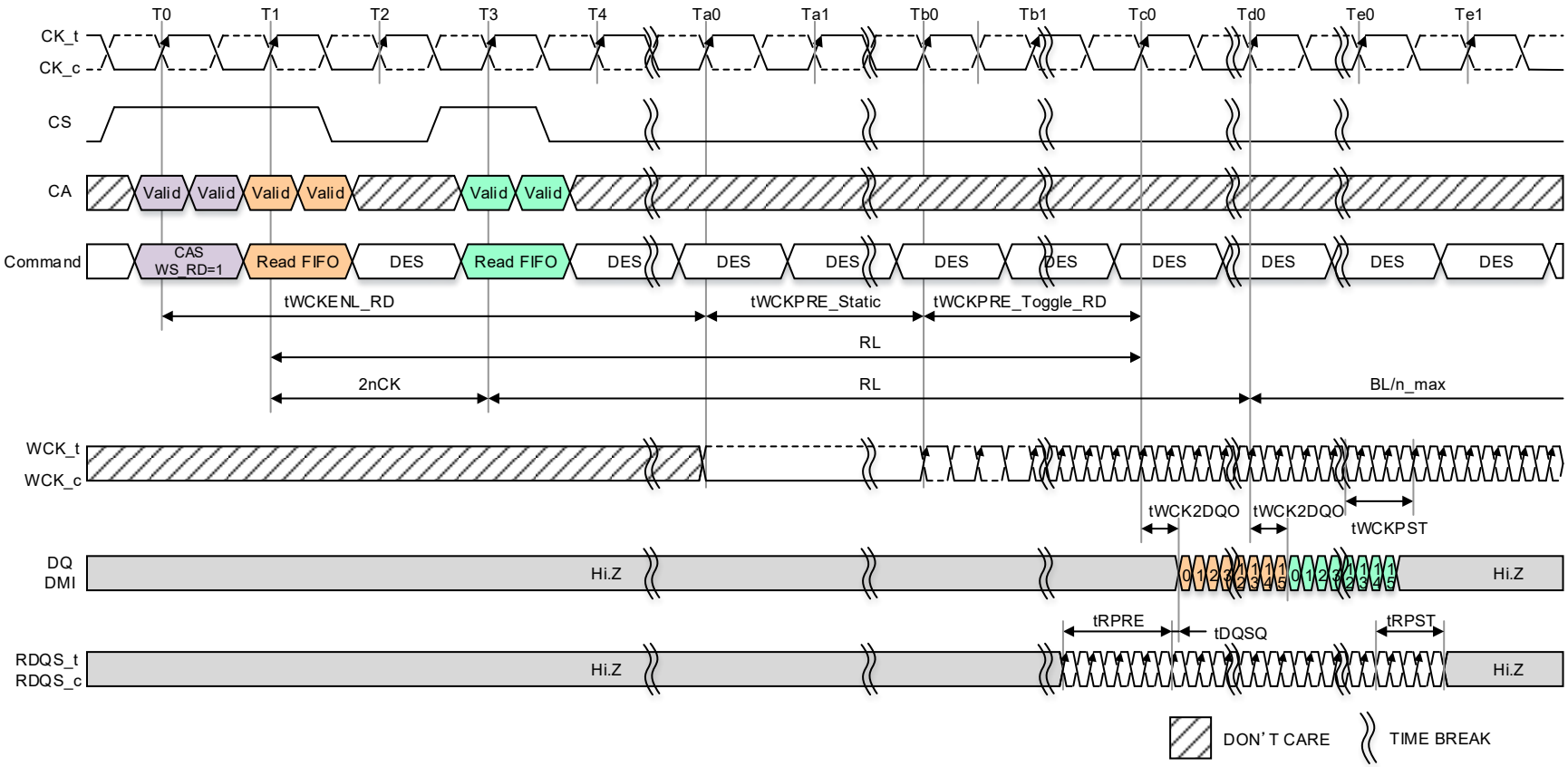

NOTE 1 tWCK2CK is 0ps in this instance.
NOTE 2 The end of both RL and tWCKPRE_Toggle_RD are the same timing in this instance.
NOTE 3 Data may be continuously read from the FIFO without any data corruption. After 8 Read-FIFO commands the FIFO pointer will wrap back to the 1st FIFO and continue advancing.
NOTE 4 CAS command is needed before a Read FIFO command when a WCK synchronization will expire.
NOTE 5 In case where the output driver of DMI is enabled by MR setting.

Figure 50 - Consecutive Read FIFO Operation timing for BG mode: CKR (WCK vs. CK) = 4:1

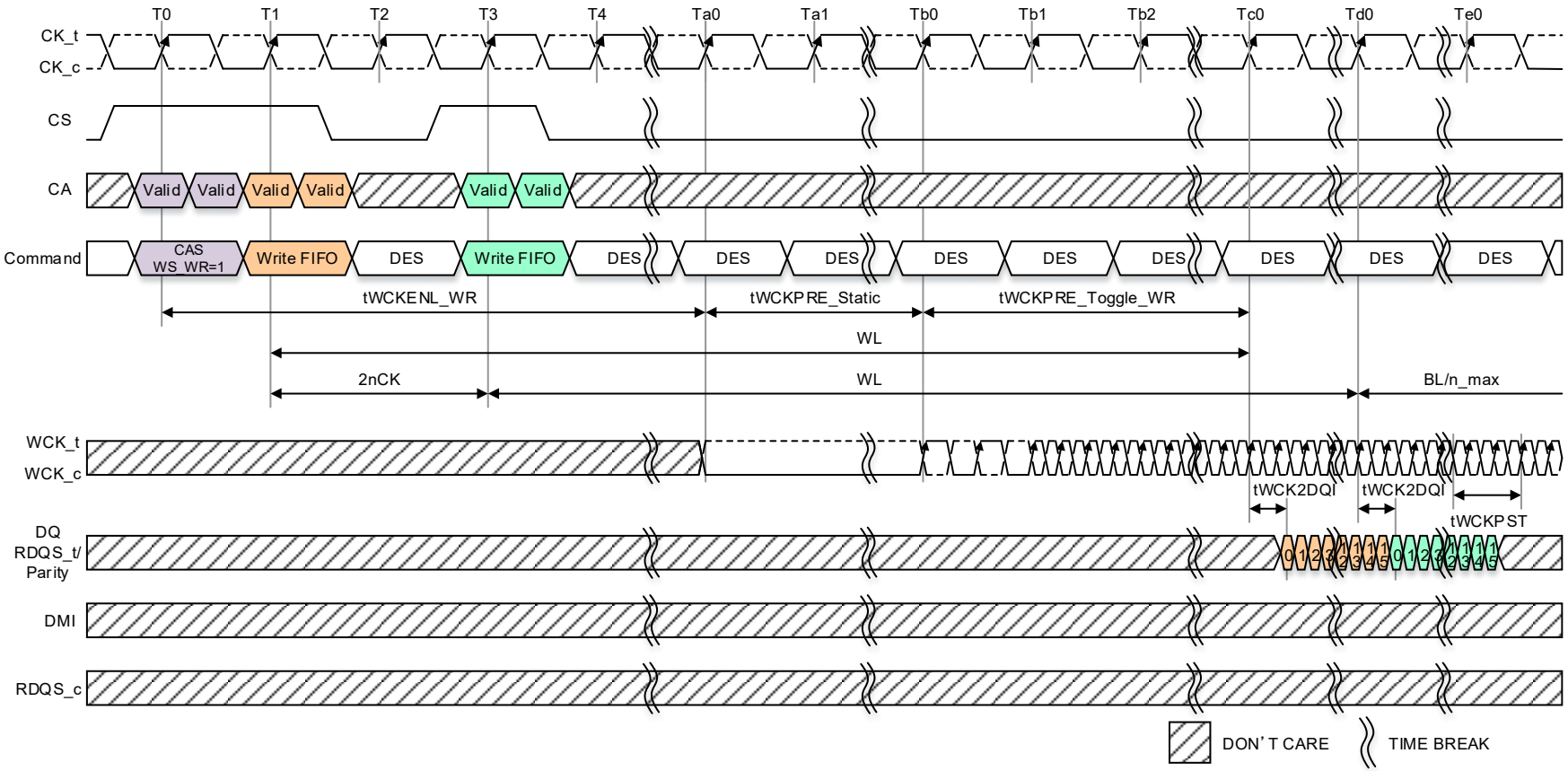

NOTE 1 WCK-RDQS_t/Parity Training is enabled: MR46 OP[2] =1_B
NOTE 2 tWCK2CK is 0ps in this instance.
NOTE 3 The end of both WL and tWCKPRE_Toggle_WR are the same timing in this instance.
NOTE 4 The (8 +1) Write FIFO command will overwrite the FIFO data from the first command. If fewer than 8 Write-FIFO commands are executed, then the remaining FIFO locations will contain undefined data.
NOTE 5 CAS command is needed before a Write FIFO command when a WCK synchronization will expire.
NOTE 6 In case where the input receiver of RDQS_t/Parity and DMI are enabled by MR setting.

Figure 51 - Consecutive Write FIFO Operation timing: WCK-RDQS_t/Parity Training is enabled for BG mode: CKR (WCK vs. CK) = 4:1

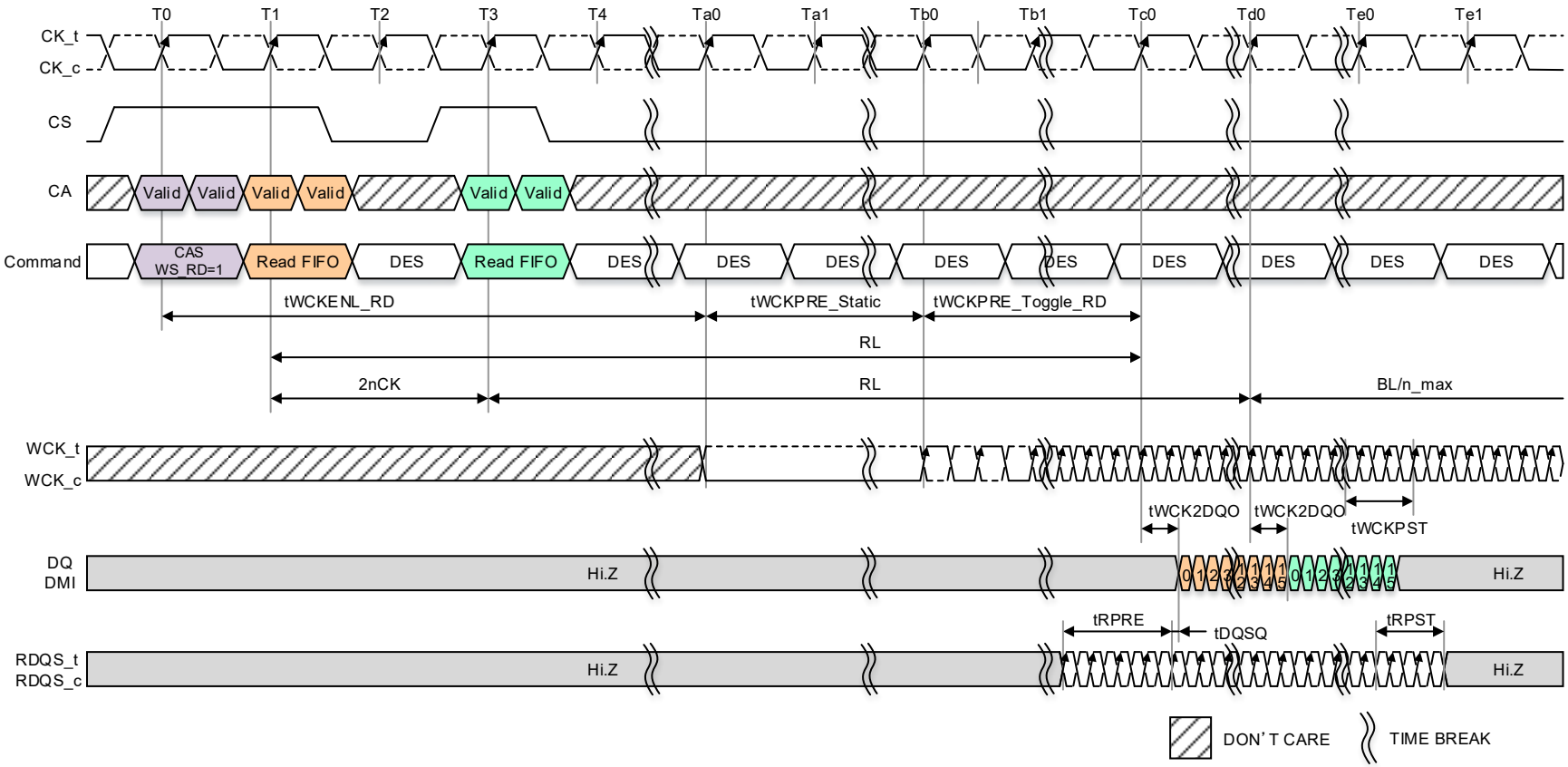

NOTE 1 WCK-RDQS_t/Parity Training is enabled: MR46 OP[2] =1_B
NOTE 2 DMI pin outputs the data which written to FIFO through the Parity pin by the Write FIFO command.
NOTE 3 tWCK2CK is 0ps in this instance.
NOTE 4 The end of both RL and tWCKPRE_Toggle_RD are the same timing in this instance.
NOTE 5 Data may be continuously read from the FIFO without any data corruption. After 8 Read FIFO commands the FIFO pointer will wrap back to the 1st FIFO and continue advancing.
NOTE 6 CAS command is needed before a Read FIFO command when a WCK synchronization will expire.
NOTE 7 In case where the output driver of DMI is enabled by MR setting.

Figure 52 - Consecutive Read FIFO Operation timing: WCK-RDQS_t/Parity Training is enabled for BG mode: CKR (WCK vs. CK) = 4:1

4.2.8.4 Command constraints for Write/Read FIFO command

The command constraints between CAS (WS_WR), CAS (WS_RD), Write FIFO and Read FIFO are shown in the command constraint section.

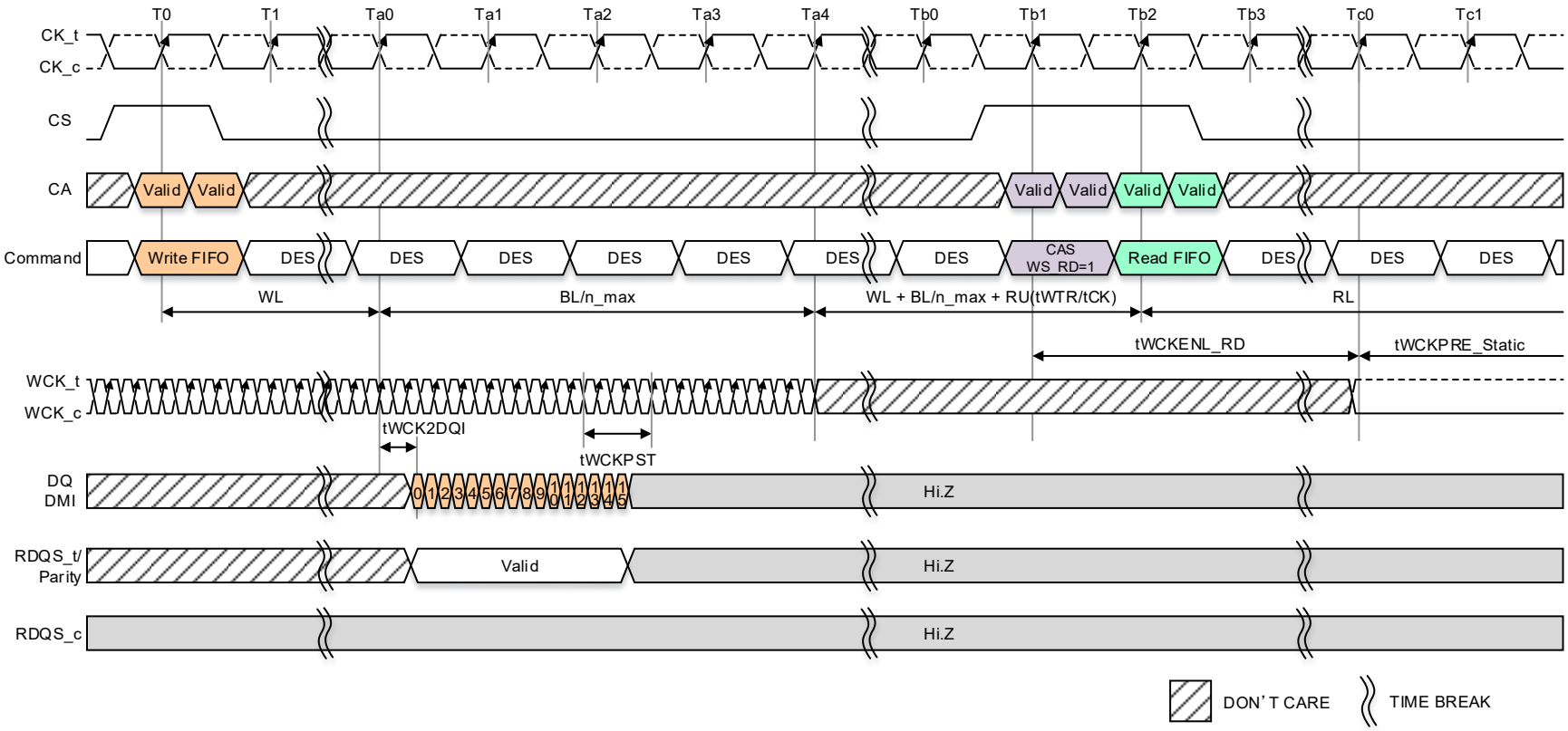

NOTE 1 tWCK2CK is 0ps in this instance.
NOTE 2 In case where the input receiver of RDQS_t/Parity and DMI are enabled by MR setting.

Figure 53 - Write FIFO to Read FIFO Timing for BG mode: CKR (WCK vs. CK) = 4:1

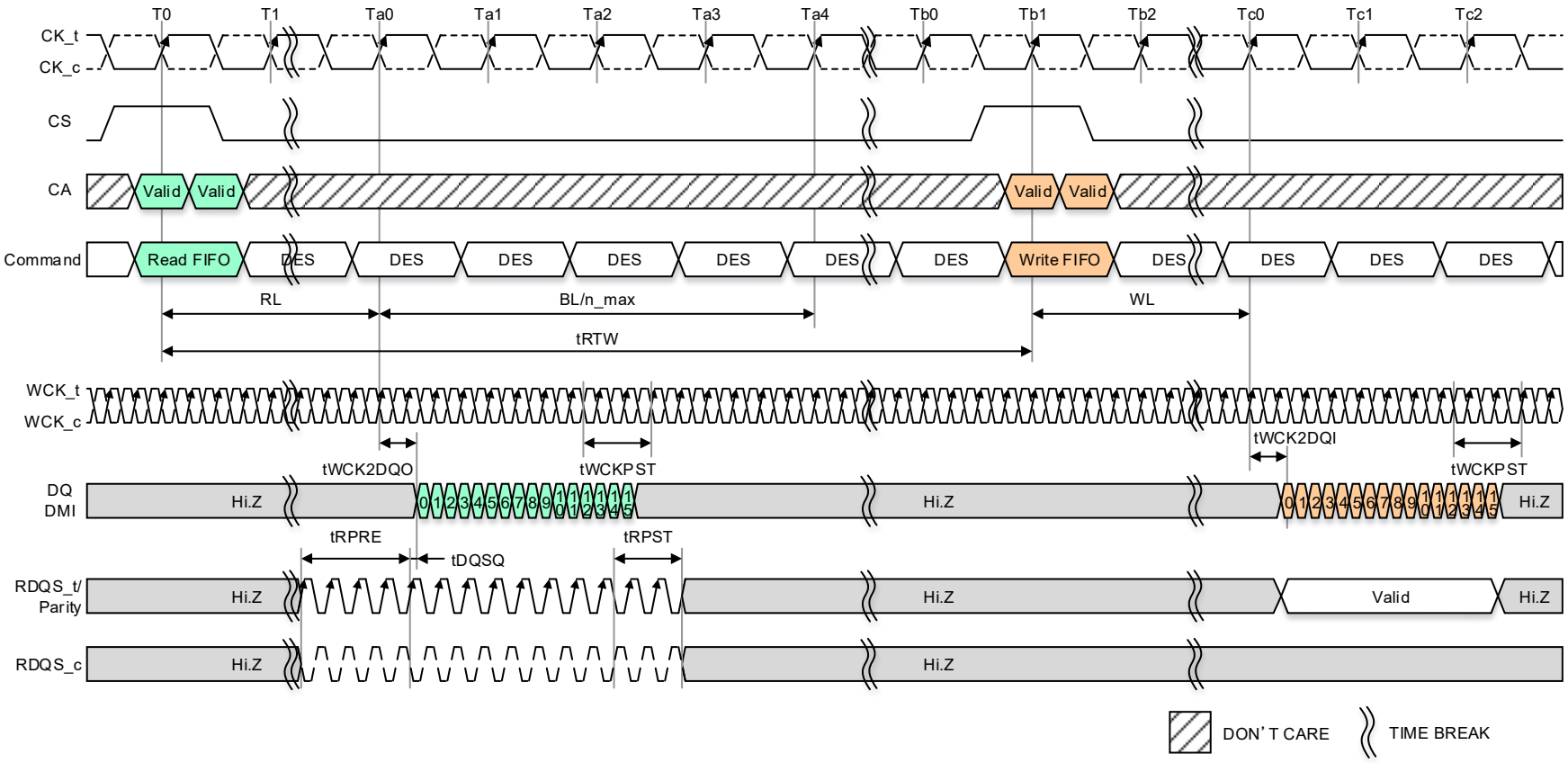

NOTE 1 tWCK2CK is 0ps in this instance.
NOTE 2 In case where the output driver of DMI is enabled by MR setting.
NOTE 3 In case where the input receiver of RDQS_t/Parity and DMI are enabled by MR setting.

Figure 54 - Read FIFO to Write FIFO Timing for BG mode: CKR (WCK vs. CK) = 4:1

4.2.9 RDQS toggle mode

LPDDR5 SDRAM feature a RDQS toggle mode that outputs continuous-toggle pattern on the RDQS pins. Before issuing MRW commands, a CAS-WS_FS command is required. After “tWCKENL_FS + tWCKPRE_static”, a MRW [MR46 OP[1]=1_B] has to be issued to enable the RDQS toggle mode. After “tERQE” passed after MRW-2 [RDQS toggle mode Enabled], LPDDR5 SDRAM will start driving RDQS_t and RDQS_c. LPDDR5 device exits the RDQS toggle mode by issuing a MRW [MR46 OP[1]=0_B RDQS toggle mode Disabled]. After “tERQX” has passed from MRW-2 [RDQS toggle mode Disabled], LPDDR5 SDRAM RDQS will transit to a Hi-impedance state. During tERQX period, WCK has to continue toggling. Refer to the section of LPDDR5 enhanced RDQS training mode about tERQE, tERQX and ODT related timing. In tERQEand tERQX period, the DES command is only allowed.
RDQS_t/c output behavior follows RDQS: MR20 OP[1:0] setting. Therefore enabling RDQS toggle mode is meaningless if MR20 OP[1:0] as 00_B: RDQS_t and RDQS_c disabled.

During the RDQS toggle mode, Power Down, SREF, Deep sleep, MRR, Write, Mask Write, Read, Write FIFO, Read FIFO and RDC are not allowed, however NOP, DES, ACT-1, ACT-2, PREpb, PREab, REFpb, REFab, MRW-1, MRW-2 and MPC can be issued. It is not allowed to adjust WCK duty cycle during the RDQS toggle mode through MR30 OP[3:0] for DCAL and MR30 OP[7:4] for DCAU setting. Additionally, from RDQS toggle mode entry to exit, the internal data bus is working as the read function. Hence the MR which concerned output control, ODT/NT-ODT and WCK setting are not allowed to change, refer to **Table 47** for specific MRs. RDQS toggle mode and Enhanced RDQS training mode are mutually exclusive and MR46 OP[0] and MR46 OP[1] are not allowed to change at the same MRW command.

Table 47 – MR# and Operand which are prohibited to change during RDQS toggle mode.

Function	MR# & Operand	Notes
RL & nRBTP	MR2 OP[3:0]	
PDDS	MR3 OP[2:0]	
DBI-RD	MR3 OP[6]	
Write DBI	MR3 OP[7]	
RPST Mode	MR10 OP[0]	
WCK PST	MR10 OP[3:2]	
RDQS PRE	MR10 OP[5:4]	
RDQS PST	MR10 OP[7:6]	
NT ODT	MR11 OP[3]	
VRO	MR13 OP[2]	
DMI I/O Control	MR13 OP[4]	
Data Mask	MR13 OP[5]	
FSP-OP	MR16 OP[3:2]	
CBT	MR16 OP[5:4]	
SoC ODT	MR17 OP[2:0]	
WCK ODT	MR18 OP[2:0]	
WCK FM	MR18 OP[3]	
WCK ON	MR18 OP[4]	
WCK2CK Leveling	MR18 OP[6]	
CKR	MR18 OP[7]	
DVFSQ	MR19 OP[3:2]	
RDQS	MR20 OP[1:0]	
WCK Mode	MR20 OP[3:2]	
RDCFE	MR21 OP[5]	
WECC	MR22 OP[5:4]	
RECC	MR22 OP[7:6]	
DCM_Start/Stop	MR26 OP[0]	
Flip inputs to cancel offset (DCM_Flip)	MR26 OP[1]	
Read/Write-based WCK-RDQS_t Training	MR26 OP[7]	1
ZQ Reset	MR28 OP[0]	
ZQ Stop	MR28 OP[1]	
ZQ Interval	MR28 OP[3:2]	
ZQ Mode	MR 28 OP[5]	
PPRE	MR41 OP[4]	
NT DQ ODT	MR41 OP[7:5]	
Enhanced RDQS	MR46 OP[0]	
FIFO RDQS Training	MR46 OP[2]	2

NOTE 1 RDQS toggle mode and Read/Write-based WCK-RDQS_t Training cannot be enabled at the same time.

NOTE 2 RDQS toggle mode and FIFO RDQS Training cannot be enabled at the same time.

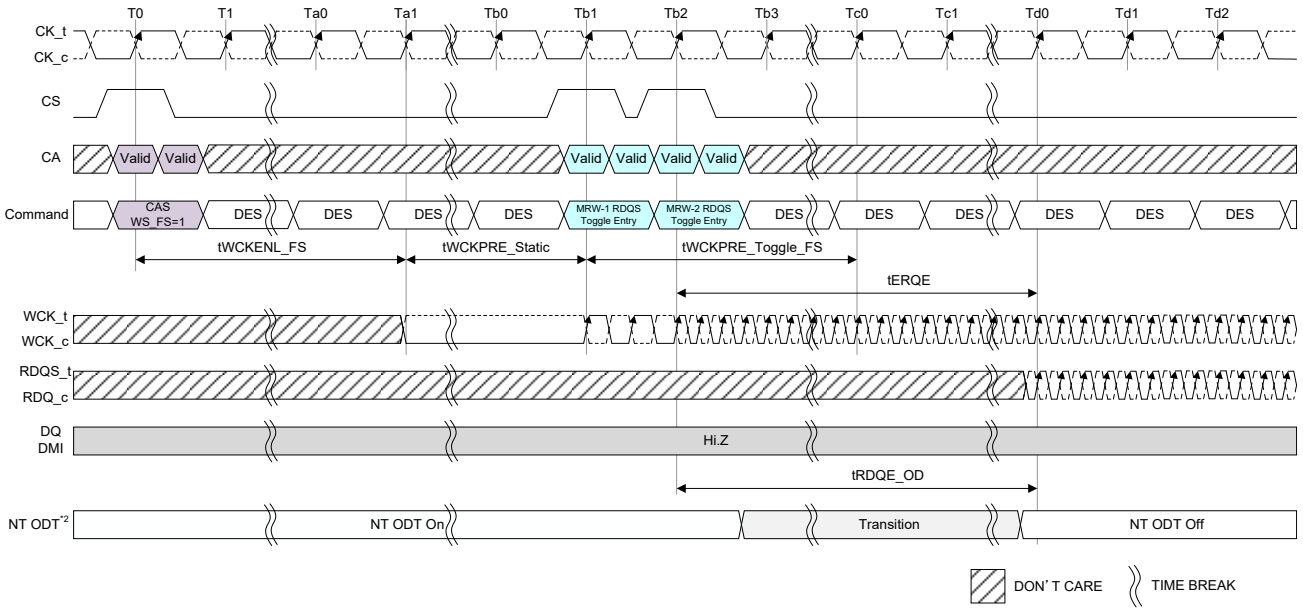

NOTE 1 DES commands are shown for ease of illustration; other commands may be valid at these times.

NOTE 2 "NT ODT" illustrates the On/Off status of NT-ODT for RDQS_t/c, DQ and/or DMI in case of NT-ODT enabled.

Figure 55 - RDQS toggle mode entry timing example

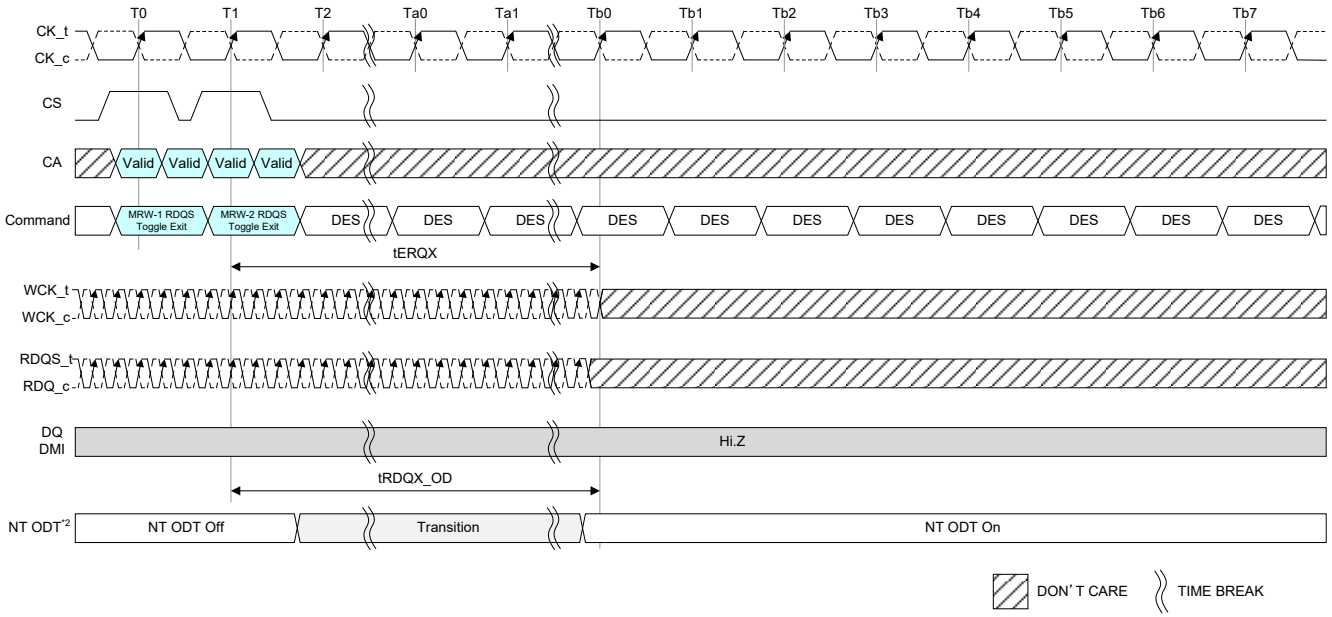

NOTE 1 DES commands are shown for ease of illustration; other commands may be valid at these times.

NOTE 2 "NT ODT" illustrates the On/Off status of NT-ODT for RDQS_t/c, DQ and/or DMI in case of NT-ODT enabled.

Figure 56 - RDQS toggle mode exit timing example

4.2.10 Enhanced RDQS training mode

LPDDR5 will enter Enhanced RDQS training mode by setting MR46 OP[0] Enhanced RDQS training mode enable. Before issuing MRW command, CAS WS_FS is required. After WCKENL_FS+tWCKPRE static, MRW commands have to be issued to enable Enhanced RDQS training mode. tERQE after MRW, the LPDDR5 will start driving RDQS_t = low and RDQS_c =high.

To keep RDQS low-impedance, during enhanced RDQS training mode WCK has to continue toggling.

When the LPDDR5 receives a Read Command, the LPDDR5 will output RDQS and data. The RDQS preamble and postamble are followed MR10 OP[7:4]. After a burst read operation, the LPDDR5 will keep RDQS low-Z while in this mode.

LPDDR5 exits Enhanced RDQS training mode by setting MR46 OP[0] Enhanced RDQS training mode disable. After tERQX has passed from MRW, LPDDR5 RQDS will transit to a Hi-impedance state. During tERQX period, WCK has to continue toggling.

In tERQE and tERQXperiod, the DES command is only allowed and during Enhanced RDQS mode, Read data training mode, ACT-1, ACT-2, PREpb, PREab, REFpb, REFab, RD, RD32, MRW-1, MRW-2, MRR, MPC and RDC can be issued and other commands are not allowed. Provided that if DMI output behavior control is set to Mode 2 (MR13 OP[4]=1_B), issuing RDC command is prohibited.

Additionally, from enhanced RDQS training mode entry to exit, the internal data bus is working as the read function. Hence the MR which concerned output control, ODT/NT-ODT and WCK setting are not allowed to change, refer to Table 48 for specific MRs. MR46 OP[0] and MR46 OP[1] are not allowed to change at the same MRW command.

RDQS_t and RDQS_c drive follow MR20 OP[1:0].

RDQS ODT is disabled after tRDQE_OD passed after enhanced RDQS enable MRW. RDQS ODT is enabled after tRDQX_OD passed after enhanced RDQS disable MRW.

Table 48 - MR# and Operand which are prohibited to change during Enhanced RDQS training mode

Function	MR# & Operand	Notes
RL & nRBTP	MR2 OP[3:0]	
PDDS	MR3 OP[2:0]	
DBI-RD	MR3 OP[6]	
Write DBI	MR3 OP[7]	
RPST Mode	MR10 OP[0]	
WCK PST	MR10 OP[3:2]	
RDQS PRE	MR10 OP[5:4]	
RDQS PST	MR10 OP[7:6]	
NT ODT	MR11 OP[3]	
VRO	MR13 OP[2]	
DMI I/O Control	MR13 OP[4]	
Data Mask	MR13 OP[5]	
FSP-OP	MR16 OP[3:2]	
CBT	MR16 OP[5:4]	
SoC ODT	MR17 OP[2:0]	
WCK ODT	MR18 OP[2:0]	
WCK FM	MR18 OP[3]	
WCK ON	MR18 OP[4]	
WCK2CK Leveling	MR18 OP[6]	
CKR	MR18 OP[7]	
DVFSQ	MR19 OP[3:2]	
RDQS	MR20 OP[1:0]	
WCK Mode	MR20 OP[3:2]	
RDCFE	MR21 OP[5]	
WECC	MR22 OP[5:4]	
RECC	MR22 OP[7:6]	
DCM_Start/Stop	MR26 OP[0]	
Flip inputs to cancel offset (DCM_Flip)	MR26 OP[1]	
Read/Write-based WCK-RDQS_t Training	MR26 OP[7]	1
ZQ Reset	MR28 OP[0]	
ZQ Stop	MR28 OP[1]	
ZQ Interval	MR28 OP[3:2]	
ZQ Mode	MR28 OP[5]	
PPRE	MR41 OP[4]	
NT DQ ODT	MR41 OP[7:5]	
RDQS Toggle	MR46 OP[1]	
FIFO RDQS Training	MR46 OP[2]	2

NOTE 1 Enhanced RDQS training mode and Read/Write-based WCK-RDQS_t Training cannot be enabled at the same time.

NOTE 2 Enhanced RDQS training mode and FIFO RDQS Training cannot be enabled at the same time.

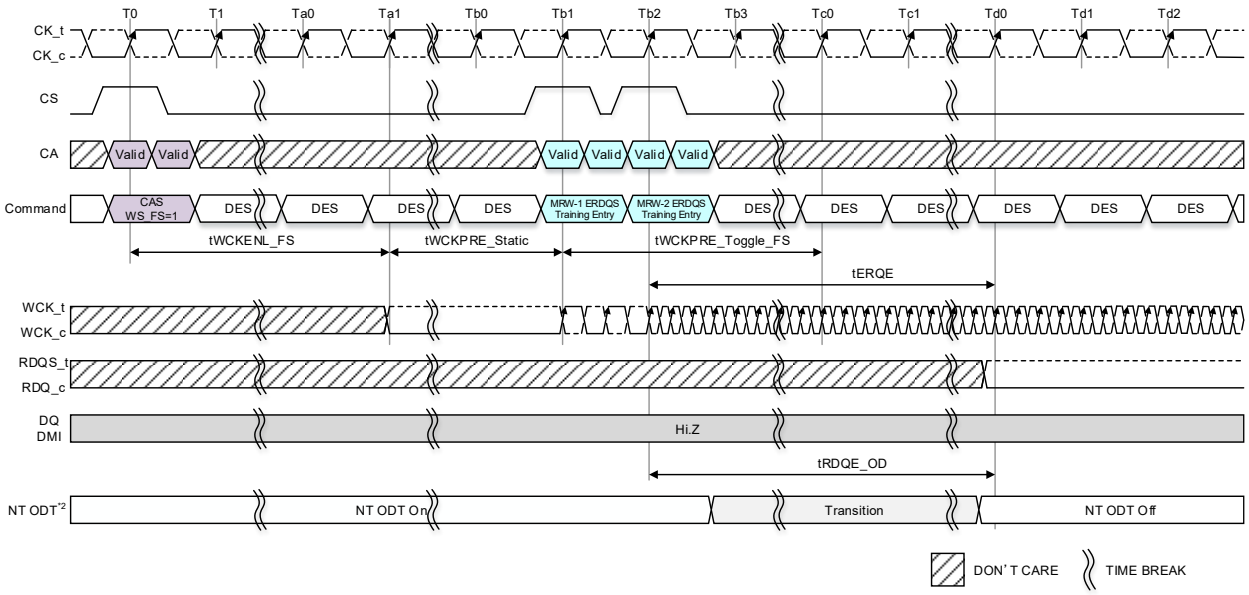

NOTE 1 DES commands are shown for ease of illustration; other commands may be valid at these times.

NOTE 2 In case of NT ODT is enable case for RDQS_t/c, DQ and/or DMI.

Figure 57 - Enhanced RDQS training mode entry timing

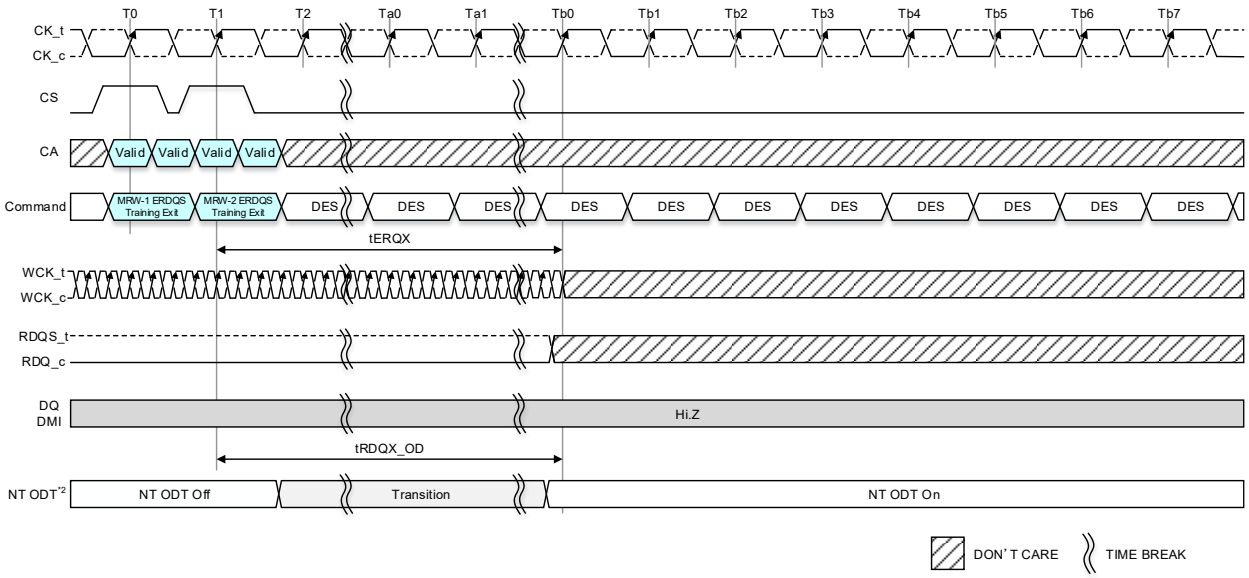

NOTE 1 DES commands are shown for ease of illustration; other commands may be valid at these times.

NOTE 2 In case of NT ODT is enable case for RDQS_t/c, DQ and/or DMI.

Figure 58 - Enhanced RDQS training mode exit timing

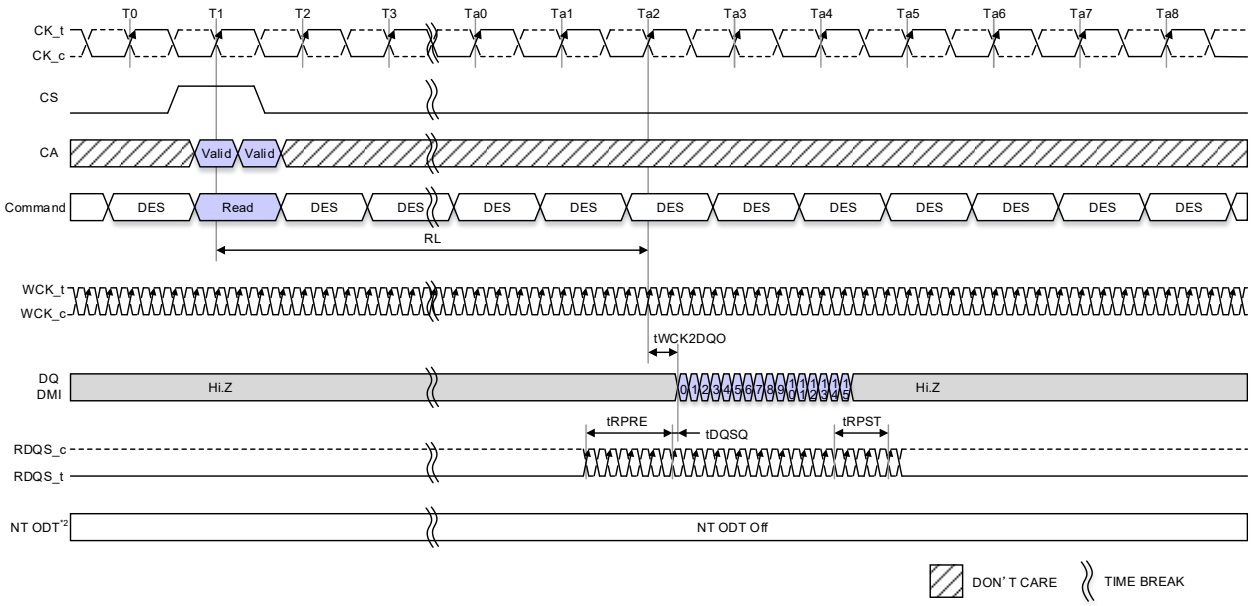

NOTE 1 DES commands are shown for ease of illustration; other commands may be valid at these times.

NOTE 2 NT ODT is disabled regardless of NT ODT setting MR41 OP[7:5] during enhanced RDQS training mode.

Figure 59 - Read operation during Enhanced RDQS training mode

Table 49 - Enhanced RQDS training mode entry and exit timings

Parameter	Symbol	Min/Max	Value	Unit	Note
Enhanced RDQS toggle mode entry	tERQE	Max	Max (35ns, 4nCK)	ns	
Enhanced RDQS toggle mode exit	tERQX	Max	Max (35ns, 4nCK)	ns	
ODT disable from Enhanced RDQS toggle mode entry	tRDQE_OD	Max	Max (35ns, 4nCK)	ns	
ODT enable from Enhanced RDQS toggle mode exit	tRDQX_OD	Max	Max (35ns, 4nCK)	ns	

4.2.11 Read/Write-based WCK-RDQS_t Training

When Write Link ECC is enabled, the RDQS_t pin functions as parity during write operation. RDQS_t, DQ data, and WCK is required to be trained to meet the write timing. In addition to WCK-RDQS_t/Parity Training in Section 4.2.8.2, which utilizes Read and Write FIFO commands for WCK-RDQS_t training, LPDDR5 SDRAM optionally supports WCK-RDQS_t training by Read and Write commands. If LPDDR5 device supports the Read/Write-based WCK-RDQS_t training function (MR26 OP[6]=1_B), users may enable the training function by setting MR26 OP[7]=1_B.

Read/Write-based WCK-RDQS_t Training MR26 OP[7]=1_B can only be used beyond 1600MHz of WCK frequency, as well as Link ECC function.

To enter the Read/Write-based WCK-RDQS_t training mode, a MRW command is required to set MR26 OP[7]=1_B. After tRDQSTFE has passed from the MRW command, LPDDR5 SDRAM is ready for Read/Write-based WCK-RDQS_t training where RDQS_t behaves like DMI pin with the Write DBI enabled (Read/Write-based WCK-RDQS_t Training might use the Write DBI circuits). Hence Write DBI: MR3 OP[7] is required to be set 1_B prior to entering WCK-RDQS_t training mode. And DMI input is ignored by LPDDR5 SDRAM during write operation even though Write DBI is enabled: MR3 OP[7] = 1_B. In this training mode, the controller is required to follow LPDDR5 SDRAM Row and Read/Write operations to access SDRAM. A bank activate command is required before issuing Read or Write commands. The training data is written to DRAM by issuing CAS command with WS_WR=1 followed immediately by Write commands. LPDDR5 SDRAM inverts Write data received on the DQ inputs in case RDQS_t is sampled HIGH, or leaves the Write data non-inverted in case RDQS_t is sampled LOW. The data written to the SDRAM by the Write command can be read back by issuing CAS command with WS_RD=1 followed immediately by Read commands. The controller compares the read data with “expected” data to see if further training is needed. The number of consecutives Read or Write commands, i.e., length of training pattern, is not limited. Certainly, the Write/Read command can be issued without WCK Sync. command during WCK Sync state. When the training is completed, LPDDR5 SDRAM exits Read/Write-based WCK-RDQS_t training mode by setting MR26 OP[7]=0_B. After tRDQSTFX has passed from the MRW, LPDDR5 is back to normal operation where RDQS_t functions based on Write Link ECC setting during write operation.
In tRDQSTFE and tRDQSTFX period, the DES command is only allowed.

Table 50 – Relationship among RDQS_t, Input data and data written to cell

		Input Data from Controller									The data written to the cell							
#	RDQS_t	DQ0	DQ1	DQ2	DQ3	DQ4	DQ5	DQ6	DQ7		DQ0	DQ1	DQ2	DQ3	DQ4	DQ5	DQ6	DQ7
1	0	D	D	D	D	D	D	D	D	=>	D	D	D	D	D	D	D	D
2	1	D	D	D	D	D	D	D	D	=>	/D	/D	/D	/D	/D	/D	/D	/D

NOTE 1 “/D” is inverted data of “D”.

During Read/Write-based WCK-RDQS_t training, the following commands are prohibited to simplify the training procedure.

- Read FIFO (RFF)
- Write FIFO (WFF)
- Masked Write (MWR)
- CAS_Write Data Copy (WDC)
- CAS_Write X (WRX)
- Read DQ Calibration (RDC)

Table 51 - Read/Write-based RDQS_t training mode entry and exit timings

Parameter	Symbol	Min/Max	Value	Unit	Note
Read/Write-based RDQS_t training mode entry	tRDQSTFE	Min	Max (35ns, 4nCK)	ns	
Read/Write-based RDQS_t training mode exit	tRDQSTFX	Min	Max (35ns, 4nCK)	ns	

4.2.11.1 Relationship between MR setting and Read/Write-based WCK-RDQS_t Training behavior

The treatment of Mode Register setting and DMI, RDQS_t/Parity pin behavior during Read/Write-based WCK-RDQS_t Training mode which is MR26 OP[7]=1_B is shown in below.

Table 52 - Relationship between MR setting and Read/Write-based WCK-RDQS_t Training

Subject	Behavior	Note
MR13 OP[5]: Data Mask	Function Disable	1
MR3 OP[7]: Write DBI	Function Disable	2
MR22 OP[5:4]: Write Link ECC	The MR setting regards as the disabled even if the Write Link ECC is enabled.	3
MR3 OP[6]: Read DBI	Read DBI function follows MR3 OP[6] setting.	
MR22 OP[7:6]: Read Link ECC	Read Link ECC function follows MR22 OP[7:6] setting.	
MR21 OP[5]: Read Data Copy	Read Data Copy function follows MR21 OP[5] setting.	

NOTE 1 Input data from DMI does not affect the input data to DQs, if MR13 OP[5]=0_B.

NOTE 2 Write DBI: MR3 OP[7] is required to be set 1_B prior to entering WCK-RDQS_t training mode, however input data from DMI does not affect the input data to DQs.

NOTE 3 This MR setting doesn't affect nWR value when MR26 OP[7]=1_B.
Stored data in MR43, MR44 and MR45 will be retained even if Write Link ECC function will be disabled by entering Read/Write-based WCK-RDQS_t Training.

Table 53 DMI, RDQS_t/Parity Input behavior for Read/Write-based WCK-RDQS_t Training

Function				DMI Input Receiver	nWR	RDQS_t/ Parity Receiver	Note
Data Mask MR13 OP[5]	Write DBI MR3 OP[7]	Write Link ECC MR22 OP[5:4]	Write Data Copy MR21 OP[4]		x16 and x8		
Disable	Disable	Disable	Disable	Turn off	w/o Link ECC	Turn on	
Disable	Disable	Disable	Enable	Turn off	w/o Link ECC	Turn on	1
Disable	Disable	Enable	Disable	Turn off	w/o Link ECC	Turn on	
Disable	Disable	Enable	Enable	Turn off	w/o Link ECC	Turn on	1
Disable	Enable	Disable	Disable	Turn off	w/o Link ECC	Turn on	
Disable	Enable	Disable	Enable	Turn off	w/o Link ECC	Turn on	1
Disable	Enable	Enable	Disable	Turn off	w/o Link ECC	Turn on	
Disable	Enable	Enable	Enable	Turn off	w/o Link ECC	Turn on	1
Enable	Disable	Disable	Disable	Turn off	w/o Link ECC	Turn on	
Enable	Disable	Disable	Enable	Turn off	w/o Link ECC	Turn on	1
Enable	Disable	Enable	Disable	Turn off	w/o Link ECC	Turn on	
Enable	Disable	Enable	Enable	Turn off	w/o Link ECC	Turn on	1
Enable	Enable	Disable	Disable	Turn off	w/o Link ECC	Turn on	
Enable	Enable	Disable	Enable	Turn off	w/o Link ECC	Turn on	1
Enable	Enable	Enable	Disable	Turn off	w/o Link ECC	Turn on	
Enable	Enable	Enable	Enable	Turn off	w/o Link ECC	Turn on	1

NOTE 1 CAS command with DC0, DC1, DC2 and/or DC3=1 is inhibited during Read/Write-based WCK-RDQS_t Training mode: MR26 OP[7]=1_B.

Table 54 - DMI behavior and Read Latencies for Read/Write-based WCK-RDQS_t Training

Function			DMI Output Driver	Read Latencies		Note
Read DBI MR3 OP[6]	Read Link ECC MR22 OP[7:6]	Read Data Copy MR21 OP[5]		x16	x8	
Disable	Disable	Disable	Turn off	Set 0	Set 1	1
Disable	Disable	Enable	Turn on (Follows Data Copy Definition)	Set 1	Set 2	1
Disable	Enable	Disable	Turn on (Follows Read Link ECC Definition)	Set 0	Set 1	2
Disable	Enable	Enable	Prohibited setting	N/A	N/A	
Enable	Disable	Disable	Turn on (Read DBI Data output)	Set 1	Set 2	1
Enable	Disable	Enable	Turn on (Follows Data Copy Definition)	Set 1	Set 2	1
Enable	Enable	Disable	Prohibited setting	N/A	N/A	
Enable	Enable	Enable	Prohibited setting	N/A	N/A	

NOTE 1 For Read latency set, refer to the table where Read Link ECC function is disabled.
NOTE 2 For Read latency set, refer to the table where Read Link ECC function is enabled

5 Simplified LPDDR5 State Diagram

LPDDR5 SDRAM state diagram provides a simplified illustration of allowed state transitions and the related commands to control them. For a complete definition of the device behavior, the information provided by the state diagram should be integrated with the truth tables and timing specification.

The truth tables provide complementary information to the state diagram; they clarify the device behavior and the applied restrictions when considering the actual state of all banks.

For the command definition, see 7.1.1.

5 Simplified LPDDR5 State Diagram (Cont'd)

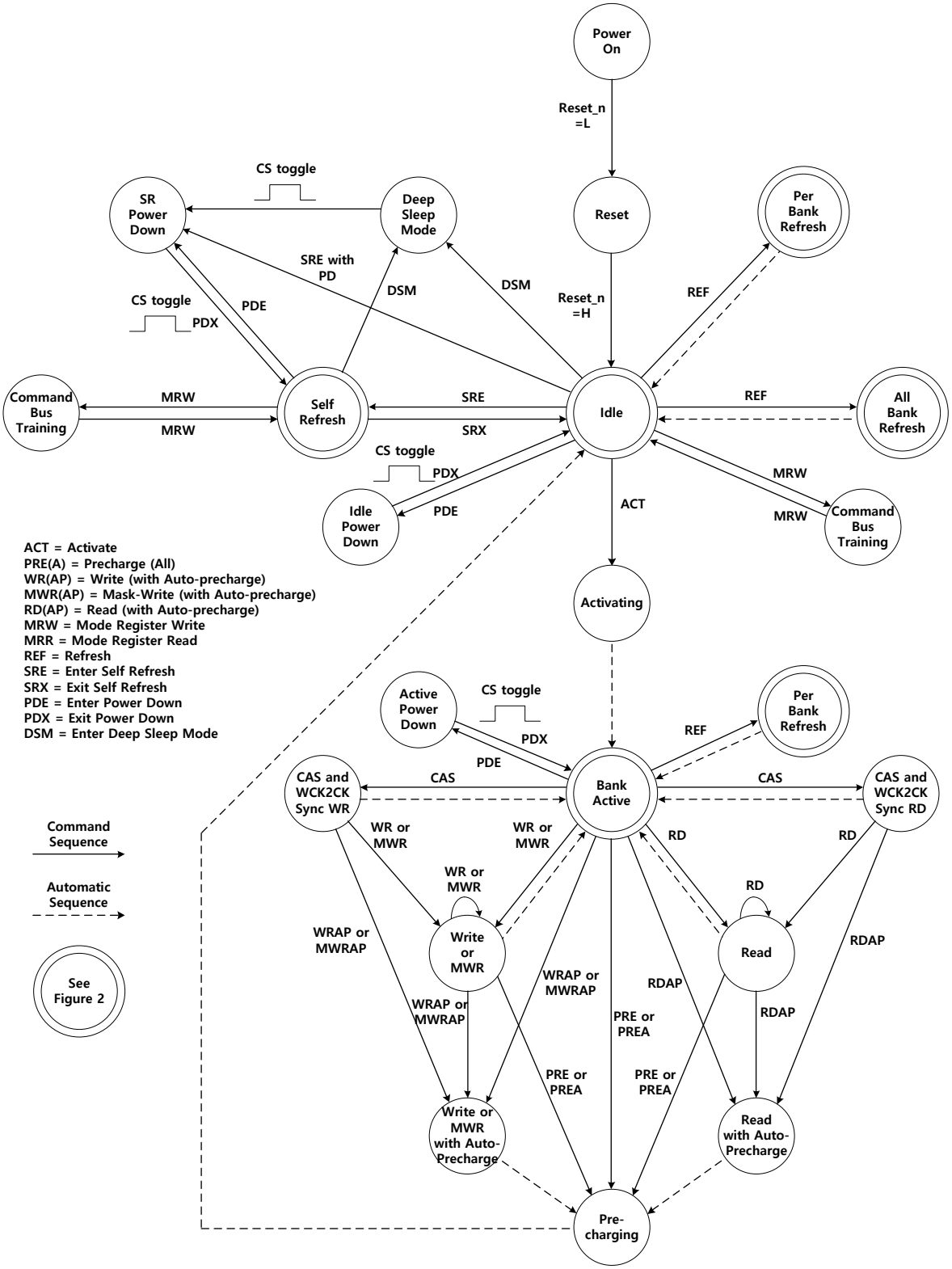

Figure 60 — LPDDR5: Simplified Bus Interface State Diagram

5 Simplified LPDDR5 State Diagram (Cont'd)

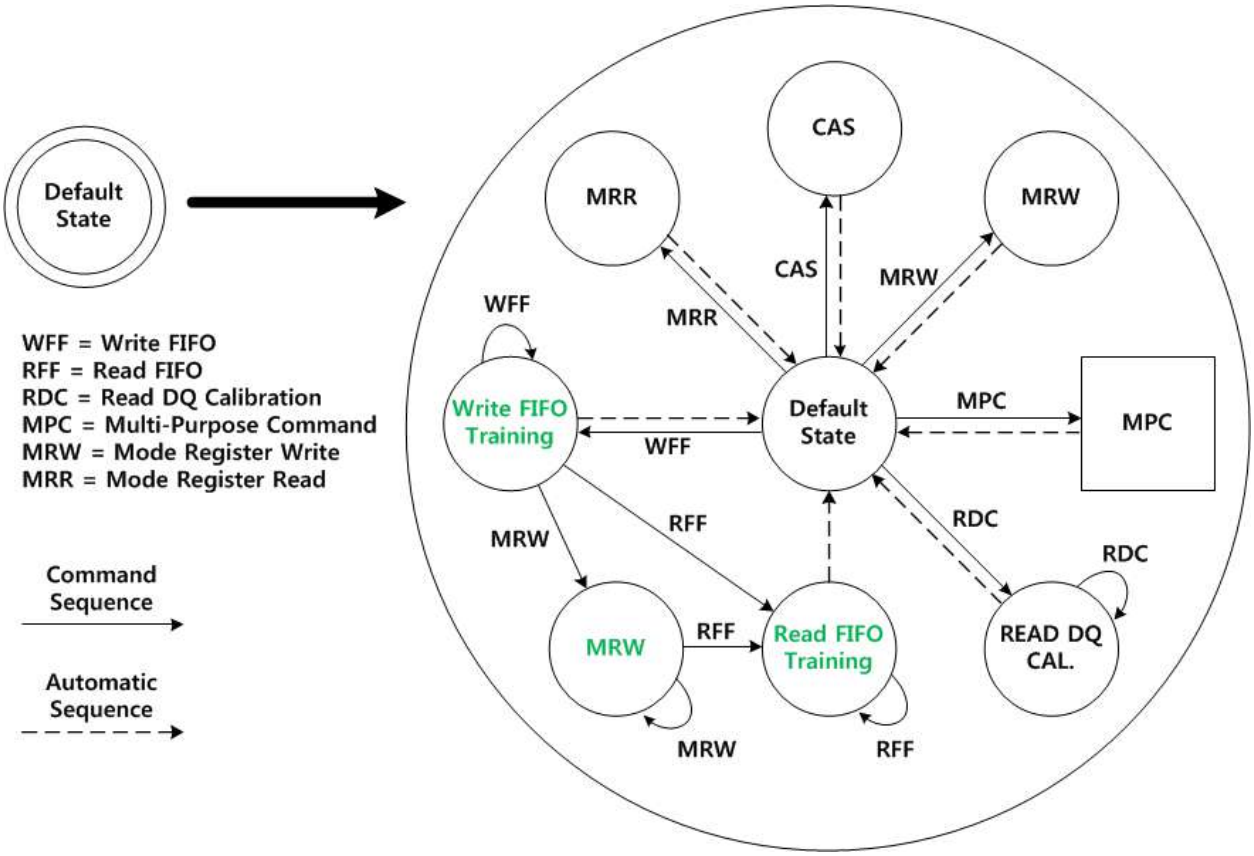

Figure 61 — Sub-State Diagram-1 related with MRR, MRW, CAS, WFF, RFF, RDC and MPC Command

5 Simplified LPDDR5 State Diagram (Cont'd)

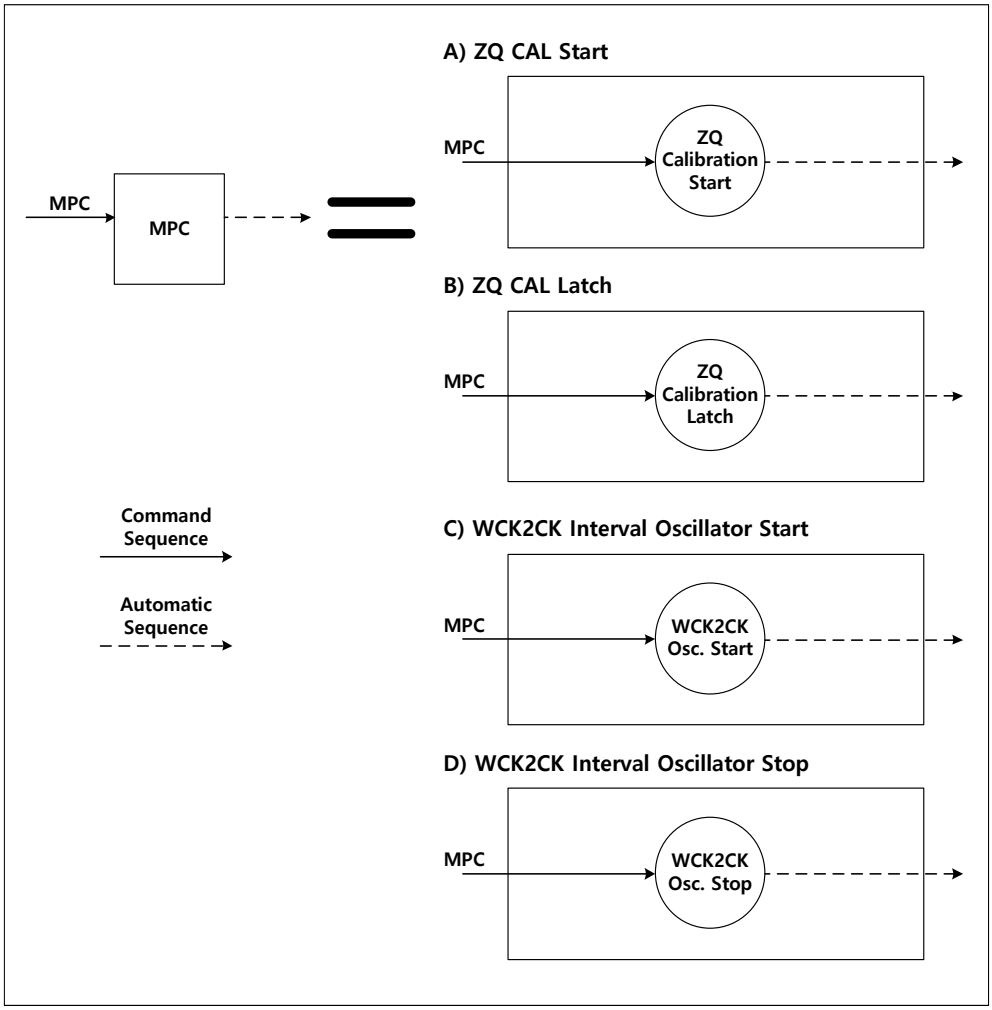

Figure 62 — Sub-State Diagram-2: related with MPC State

5 Simplified LPDDR5 State Diagram (Cont'd)

NOTE 1 From the Self-Refresh state the device can enter Power-Down, MRR, MRW, MPC and Deep Sleep Mode states. See 7.5.4, on Self-Refresh, for more information.

NOTE 2 In IDLE state, all banks are pre-charged.

NOTE 3 In the case of a MRW command to enter a training mode, the state machine will not automatically return to the IDLE state at the conclusion of training. See 7.6.2, on Mode Register Write (MRW), for more information.

NOTE 4 In the case of a MPC command to enter a training mode, the state machine may not automatically return to the IDLE state at the conclusion of training. See 7.6.13, on Multi-Purpose Command (MPC), for more information.

NOTE 5 This simplified State Diagram is intended to provide an overview of the possible state transitions and the commands to control them. In particular, situations involving more than one bank, the enabling or disabling of on-die termination, and some other events are not captured in full detail.

NOTE 6 States that have an "automatic return" and can be accessed from more than one prior state (e.g., MRW from either idle of Active states) will return to the state from when they were initiated (e.g., MRW from Idle will return to Idle).

NOTE 7 The RESET_n pin can be asserted from any state, and will cause the SDRAM to go to the Reset State. The diagram shows RESET state applied from the Power-On as an example, but the Diagram should not be construed as a restriction on RESET_n.

NOTE 8 Bank Active state can enter "CAS and WCK2CK Sync WR", "CAS and WCK2CK Sync RD" State for WCK-to-CK Synchronization, Non-Target ODT setting or Burst Length setting if it is needed.

NOTE 9 Deep Sleep Mode state can enter Self-Refresh Power Down state toggling CS (VDD2H level). See 7.5.8 for more information on Deep Sleep Mode.

NOTE 10 CAS command is the stand alone command.

NOTE 11 "Bank Active" to "Per-Bank Refresh" transition only refers to different banks not the same bank.

NOTE 12 Only MRW commands for MR16 OP[1:0]: FSP-WR, OP[3:2]: FSP-OP, OP[6]: VRCG and MR14 OP[6:0]:VREF(DQ[7:0]) and MR15 OP[6:0]:VREF(DQ[15:8]) are allowed from WRITE FIFO command to READ FIFO command.

6 Mode Register Definition

6.1 Mode Register Assignment and Definition in LPDDR5 SDRAM

Table 55 shows the mode registers for LPDDR5 SDRAM. Each register is denoted as “R” if it can be read but not written, “W” if it can be written but not read, and “R/W” if it can be read and written. A Mode Register Read command is used to read a mode register. A Mode register Write command is used to write a mode register. LPDDR5 device provides additional MRR capability to some write-only Mode Registers containing important memory system configuration and status info. Mode Register 1, 3, 11, 16, 17, 37, and 40 can be read by issuing a Mode Register Read (MRR) command.

Table 55 - Table 1. Mode Register Assignment in LPDDR5 SDRAM

MR#	MA[6:0]	Access	OP[7]	OP[6]	OP[5]	OP[4]	OP[3]	OP[2]	OP[1]		OP[0]
0	00H	R	RFU	RFU	Unified NT-ODT Behavior	DMI Ouput Behavior Mode	Optimized Refresh Mode	Enhanced WCK Always On Mode	Latency Mode		NT-ODT DQ/RDQS Timing Separation
1	01H	R/W	WL				CK Mode		RFU		
			WL				CK Mode				
			WL				CK Mode				
2	02H	W	nWR					RL and nRBTP			
			nWR					RL and nRBTP			
			nWR					RL and nRBTP			
3	03H	R/W	DBI-WR	DBI-RD	WLS	BK/BG ORG		PDDS			
			DBI-WR	DBI-RD	WLS	BK/BG ORG		PDDS			
			DBI-WR	DBI-RD	WLS	BK/BG ORG		PDDS			
4	04H	R	TUF	ZQ Master	ZQUF		Refresh Multiplier				
5	05H	R		LPDDR5 Manufacturer ID							
6	06H	R		Revision ID-1							
7	07H	R		Revision ID-2							
8	08H	R	IO Width		Density					Type	
9	09H	W		Vendor Specific Test Register							
10	0AH	W	RDQS PST		RDQS PRE		WCK PST	RFU			RPST Mode
			RDQS PST		RDQS PRE		WCK PST				RPST Mode
			RDQS PST		RDQS PRE		WCK PST				RPST Mode
11	0BH	R/W	RFU	CA ODT			NT ODT		DQ ODT		
				CA ODT			NT ODT		DQ ODT		
				CA ODT			NT ODT		DQ ODT		
12	0CH	R/W	VBS		V_{REF}(CA)						
					V_{REF}(CA)						
					V_{REF}(CA)						

MR#	MA[6:0]	Access	OP[7]	OP[6]	OP[5]	OP[4]	OP[3]	OP[2]	OP[1]	OP[0]
13	$0D_H$	W	Dual VDD2	CBT Mode	DMD	DMI Ouput Behavior Mode	RFU	VRO	Thermal Offset	
14	$0E_H$	R/W	VDLC	V_{REF}(DQ[7:0])						
				V_{REF}(DQ[7:0])						
				V_{REF}(DQ[7:0])						
15	$0F_H$	R/W	RFU	V_{REF}(DQ[15:8])						
				V_{REF}(DQ[15:8])						
				V_{REF}(DQ[15:8])						
16	10_H	R/W	CBT-PH	VRCG	CBT		FSP-OP		FSP-WR	
17	11_H	R/W	x8 ODTD Upper	x8 ODTD Lower	ODTD-CA	ODTD-CS	ODTD-CK	SOC ODT		
					ODTD-CA	ODTD-CS	ODTD-CK	SOC ODT		
					ODTD-CA	ODTD-CS	ODTD-CK	SOC ODT		
18	12_H	W	CKR	WCK2CK Leveling	RFU	WCK ON	WCK_FM	WCK ODT		
			CKR			WCK ON	WCK_FM	WCK ODT		
			CKR			WCK ON	WCK_FM	WCK ODT		
19	13_H	R/W	RFU		WCK2DQ OSC FM support	WCK2DQ OSC FM	DVFSQ	DVFSC		
						WCK2DQ OSC FM	DVFSQ	DVFSC		
						WCK2DQ OSC FM	DVFSQ	DVFSC		
20	14_H	W	RDC DQ Mode	RDC DMI Mode	MRWDU	MRWDL	WCK Mode	RDQS		
							WCK Mode	RDQS		
							WCK Mode	RDQS		
21	15_H	R/W	WXS	WXFE	RDCFE	WDCFE	ODT-CSFS	WXFS	RDCFS	WDCFS
22	16_H	W	RECC		WECC		RFU			
			RECC		WECC					
			RECC		WECC					
23	17_H	W	PASR Segment Mask							
24	18_H	R/W	DFE Support	DFE Quantity for Upper Byte			RFU	DFE Quantity for Lower Byte		
				DFE Quantity for Upper Byte				DFE Quantity for Lower Byte		
				DFE Quantity for Upper Byte				DFE Quantity for Lower Byte		
25	19_H	W	Optimized Refresh Enable	PARC	CA Inputs TERM	CK pair TERM	RFU			
26	$1A_H$	R/W	RDQSTFE	RDQSTFS	DCMU1	DCMU0	DCML1	DCML0	DCM Flip	DCM Start/ Stop
27	$1B_H$	R	RAAMULT		RAAIMT					RFM
28	$1C_H$	W	RFU		ZQ Mode	RFU	ZQ interval		ZQ Stop	ZQ Reset
29	$1D_H$	R	PPR Resource							
30	$1E_H$	W	DCA for Upper byte				DCA for Lower byte			
			DCA for Upper byte				DCA for Lower byte			
			DCA for Upper byte				DCA for Lower byte			

MR#	MA[6:0]	Access	OP[7]	OP[6]	OP[5]	OP[4]	OP[3]	OP[2]	OP[1]	OP[0]
31	1F$_H$	W	Lower-Byte per-bit control Register for DQ Calibration							
32	20$_H$	W	Upper-Byte per-bit control Register for DQ Calibration							
33	21$_H$	W	DQ Calibration Pattern “A”							
34	22$_H$	W	DQ Calibration Pattern “B”							
35	23$_H$	R	WCK2DQI Oscillator Count - LSB							
36	24$_H$	R	WCK2DQI Oscillator Count - MSB							
37	25$_H$	R/W	WCK2DQI interval timer run time setting							
38	26$_H$	R	WCK2DQO Oscillator Count - LSB							
39	27$_H$	R	WCK2DQO Oscillator Count - MSB							
40	28$_H$	R/W	WCK2DQO interval timer run time setting							
41	29$_H$	W	NT DQ ODT NT DQ ODT NT DQ ODT			PPRE	RFU			
42	2A$_H$	W	PPR KEY Protection							
43	2B$_H$	R	DBE_flag	SBEC_Rule	SBE_count					
44	2C$_H$	R	Data ECC Syndrome							
45	2D$_H$	R	Data ECC Syndrome	Error Byte Lane	DMI ECC Syndrome					
46	2E$_H$	W	RFU					FIFO RDQS Training	RDQS Toggle	Enhanced RDQS
47	2F$_H$	R	Serial ID-1							
48	30$_H$	R	Serial ID-2							
49	31$_H$	R	Serial ID-3							
50	32$_H$	R	Serial ID-4							
51	33$_H$	R	Serial ID-5							
52	34$_H$	R	Serial ID-6							
53	35$_H$	R	Serial ID-7							
54	36$_H$	R	Serial ID-8							
55	37$_H$	N/A	DNU (Do Not Use)							
56	38$_H$	W	Valid 0 or 1							
57	39$_H$	R/W	RFU		RFMSBC		RFMSB		RAADEC	
58:59	3A$_H$:3B$_H$	N/A	DNU (Do Not Use)							
60	3C$_H$	W	Valid 0 or 1							
61:63	3D$_H$:3F$_H$	N/A	DNU (Do Not Use)							

	Applied when FSP=0
	Applied when FSP=1
	Applied when FSP=2

NOTE 1 RFU bits shall be set to '0' during writes.
NOTE 2 All mode registers that are specified as RFU or write-only shall return undefined data when read.
NOTE 3 All mode registers that are specified as RFU should not be written.
NOTE 4 Writes to read-only registers shall have no impact on the functionality of the device.
NOTE 5 In order to guarantee proper operation, all mode registers that can be written shall be set to specified data, except "Reserved" and "RFU".

6.2 Mode Register Definition

6.2.1 Mode Register definition

Table 56 - MR0 Register Information (MA [7:0] = 00_H)

OP[7]	OP[6]	OP[5]	OP[4]	OP[3]	OP[2]	OP[1]	OP[0]
RFU	RFU	Unified NT-ODT Behavior	DMI Ouput Behavior Mode	Optimized Refresh Mode	Enhanced WCK Always On Mode	Latency Mode	NT-ODT DQ/RDQS Timing Separation

Table 57 - MR0 definition

Function	Register Type	Operand	Data	Notes
NT-ODT DQ/RDQS Timing Separation	Read only	OP[0]	0_B: Device supports same DQ/RDQS NT-ODT Timing 1_B: Device supports separated DQ/RDQS NT-ODT Timing	2
Latency Mode		OP[1]	0_B: Device supports X16 mode latency 1_B: Device supports byte mode latency	1
Enhanced WCK Always-On Mode		OP[2]	0_B: Device does not support Enhanced WCK Always-ON mode. 1_B: Device supports Enhanced WCK Always-ON mode.	3
Optimized Refresh Mode		OP[3]	0_B: Device does not support Optimized Refresh mode 1_B: Device supports Optimized Refresh mode.	4
DMI Ouput Behavior Mode		OP[4]	0_B: Device only supports DMI Behavior mode1 1_B: Device supports both DMI Behavior mode1, 2 and mode selection.	5
Unified NT-ODT Behavior		OP[5]	0_B: The NT-ODT behavior does not follow the unified NT-ODT behavior. 1_B: The NT-ODT behavior follows the unified NT-ODT behavior.	6

NOTE 1. Byte mode devices only support byte mode latency.

NOTE 2. LPDDR5 SDRAM supports Separte DQ/RDQS NT-ODT timing as an optional feature. See “NT-ODT behavior for Read Operation” section.

NOTE 3. Enhanced WCK Always On mode is an optional feature. See “Enhanced WCK Always On Mode” section.

NOTE 4. Optimized Refresh is an optional feature for Self Refresh mode. See “Optimized Refresh” section.

NOTE 5. DMI Behavior Mode 2 and DMI Behavior Mode selection at Read FIFO and Read DQ Calibration is an optional feature. DMI Behavior Mode can be selected by MR13 OP[4]. See “DMI Output Behavior Mode” section.

NOTE 6. Unified NT-ODT behaivor is an optional feature. See “NT-ODT behavior unification” section.

Table 58 - MR1 Register Information (MA[5:0] = 01_H)

OP[7]	OP[6]	OP[5]	OP[4]	OP[3]	OP[2]	OP[1]	OP[0]
WL				CK Mode	RFU	RFU	RFU

Table 59 - MR1 definition

<table>
<tr><th>Function</th><th>Register Type</th><th>Operand</th><th>Data</th><th>Notes</th></tr>
<tr><td>CK mode</td><td rowspan="2">Read /Write</td><td>OP[3]</td><td>0_B: Differential (Default)
1_B: Single Ended</td><td>1,2,3</td></tr>
<tr><td>WL
(Write Latency)</td><td>OP[7:4]</td><td>WL (x16/ch and x8/ch, DVFSC disable)
<table>
<tr><th>OP[7:4]</th><th>WCK:CK</th><th>Set A</th><th>Set B</th></tr>
<tr><td>0000_B</td><td rowspan="6">2:1</td><td>4</td><td>4</td></tr>
<tr><td>0001_B</td><td>4</td><td>6</td></tr>
<tr><td>0010_B</td><td>6</td><td>8</td></tr>
<tr><td>0011_B</td><td>8</td><td>10</td></tr>
<tr><td>0100_B</td><td>8</td><td>14</td></tr>
<tr><td>0101_B</td><td>10</td><td>16</td></tr>
<tr><td>0000_B (default)</td><td rowspan="12">4:1</td><td>2</td><td>2</td></tr>
<tr><td>0001_B</td><td>2</td><td>3</td></tr>
<tr><td>0010_B</td><td>3</td><td>4</td></tr>
<tr><td>0011_B</td><td>4</td><td>5</td></tr>
<tr><td>0100_B</td><td>4</td><td>7</td></tr>
<tr><td>0101_B</td><td>5</td><td>8</td></tr>
<tr><td>0110_B</td><td>6</td><td>9</td></tr>
<tr><td>0111_B</td><td>6</td><td>11</td></tr>
<tr><td>1000_B</td><td>7</td><td>12</td></tr>
<tr><td>1001_B</td><td>8</td><td>14</td></tr>
<tr><td>1010_B</td><td>9</td><td>15</td></tr>
<tr><td>1011_B</td><td>9</td><td>16</td></tr>
</table>
All others are RFU

WL (x16/ch and x8/ch, DVFSC enable)
<table>
<tr><th>OP[7:4]</th><th>WCK:CK</th><th>Set A</th><th>Set B</th></tr>
<tr><td>0000_B</td><td rowspan="3">2:1</td><td>4</td><td>4</td></tr>
<tr><td>0001_B</td><td>4</td><td>6</td></tr>
<tr><td>0010_B</td><td>6</td><td>8</td></tr>
<tr><td>0000_B (default)</td><td rowspan="3">4:1</td><td>2</td><td>2</td></tr>
<tr><td>0001_B</td><td>2</td><td>3</td></tr>
<tr><td>0010_B</td><td>3</td><td>4</td></tr>
</table>
All others are RFU</td><td>2,3,4,5</td></tr>
</table>

NOTE 1 When MR1 OP[3]= 1B, CK_t is used as CK timing and CK_c is set to a valid logic state.

NOTE 2 There are three physical registers assigned to each bit of this MR parameter, designated set point 0, set point 1 and set point 2. Only the registers for the set point determined by the state of the FSP-WR bit (MR16 OP[1:0]) will be written to with an MRW command to this MR address.

NOTE 3 There are three physical registers assigned to each bit of this MR parameter, designated set point 0 , set point 1 and set point 2. The device will operate only according to the values stored in the registers for the active set point, i.e., the set point determined by the state of the FSP-OP bit (MR16 OP[3:2]). The values in the registers for the inactive set point will be ignored by the device, and may be changed without affecting device operation.

NOTE 4 The Write Latency applies regardless of the following function setting: (Disable/Enable)

	Byte Mode, Write DBI, Write Data Copy and Link ECC
NOTE 5	Write Latency Set "A" and Set "B" is determined by MR3 OP[5]. When MR3 OP[5]=0, then Write Latency Set "A" should be used. When MR3 OP[5]=1, then Write Latency Set "B" should be used.

Table 60 - MR2 Register Information (MA [6:0] = 02_H)

OP[7]	OP[6]	OP[5]	OP[4]	OP[3]	OP[2]	OP[1]	OP[0]
nWR				RL and nRBTP			

Table 61 - MR2 Register definition

<table>
<tr><th>Function</th><th>Register Type</th><th>Operand</th><th>Data</th><th>Notes</th></tr>
<tr><td>RL (Read latency) and nRBTP (Read Burst end to Precharge delay)</td><td>Write-only</td><td>OP[3:0]</td><td>RL and nRBTP
(Link ECC off case, DVFSC disable)
<table>
<tr><th>OP[3:0]</th><th>WCK:CK Ratio</th><th>RL Set 0</th><th>RL Set 1</th><th>RL Set 2</th><th>nRBTP</th></tr>
<tr><td>0000_B (Default)</td><td>2:1</td><td>6</td><td>6</td><td>6</td><td>0</td></tr>
<tr><td>0001_B</td><td>2:1</td><td>8</td><td>8</td><td>8</td><td>0</td></tr>
<tr><td>0010_B</td><td>2:1</td><td>10</td><td>10</td><td>12</td><td>0</td></tr>
<tr><td>0011_B</td><td>2:1</td><td>12</td><td>14</td><td>14</td><td>0</td></tr>
<tr><td>0100_B</td><td>2:1</td><td>16</td><td>16</td><td>18</td><td>2</td></tr>
<tr><td>0101_B</td><td>2:1</td><td>18</td><td>20</td><td>20</td><td>2</td></tr>
<tr><td>0000_B</td><td>4:1</td><td>3</td><td>3</td><td>3</td><td>0</td></tr>
<tr><td>0001_B</td><td>4:1</td><td>4</td><td>4</td><td>4</td><td>0</td></tr>
<tr><td>0010_B</td><td>4:1</td><td>5</td><td>5</td><td>6</td><td>0</td></tr>
<tr><td>0011_B</td><td>4:1</td><td>6</td><td>7</td><td>7</td><td>0</td></tr>
<tr><td>0100_B</td><td>4:1</td><td>8</td><td>8</td><td>9</td><td>1</td></tr>
<tr><td>0101_B</td><td>4:1</td><td>9</td><td>10</td><td>10</td><td>1</td></tr>
<tr><td>0110_B</td><td>4:1</td><td>10</td><td>11</td><td>12</td><td>2</td></tr>
<tr><td>0111_B</td><td>4:1</td><td>12</td><td>13</td><td>14</td><td>2</td></tr>
<tr><td>1000_B</td><td>4:1</td><td>13</td><td>14</td><td>15</td><td>3</td></tr>
<tr><td>1001_B</td><td>4:1</td><td>15</td><td>16</td><td>17</td><td>4</td></tr>
<tr><td>1010_B</td><td>4:1</td><td>16</td><td>17</td><td>19</td><td>4</td></tr>
<tr><td>1011_B</td><td>4:1</td><td>17</td><td>18</td><td>20</td><td>4</td></tr>
</table>
All others are RFU</td><td>1,2</td></tr>
</table>

Table 61 MR2 Register definition (Cont'd)

<table>
<tr><th>Function</th><th>Register Type</th><th>Operand</th><th>Data</th><th>Notes</th></tr>
<tr><td>RL (Read latency) and nRBTP (Read Burst end to Precharge delay)</td><td>Write-only</td><td>OP[3:0]</td><td>RL and nRBTP
(Link ECC off case, DVFSC enable)
<table>
<tr><th>OP[3:0]</th><th>WCK:CK Ratio</th><th>RL Set 0</th><th>RL Set 1</th><th>RL Set 2</th><th>nRBTP</th></tr>
<tr><td>0000 B</td><td>2:1</td><td>6</td><td>6</td><td>6</td><td>0</td></tr>
<tr><td>0001B</td><td>2:1</td><td>8</td><td>10</td><td>10</td><td>0</td></tr>
<tr><td>0010B</td><td>2:1</td><td>12</td><td>12</td><td>14</td><td>0</td></tr>
<tr><td>0000B</td><td>4:1</td><td>3</td><td>3</td><td>3</td><td>0</td></tr>
<tr><td>0001B</td><td>4:1</td><td>4</td><td>5</td><td>5</td><td>0</td></tr>
<tr><td>0010B</td><td>4:1</td><td>6</td><td>6</td><td>7</td><td>0</td></tr>
</table>
All others are RFU

RL and nRBTP
(Link ECC on case, DVFSC disabled)
<table>
<tr><th>OP[3:0]</th><th>WCK:CK Ratio</th><th>RL Set 0</th><th>RL Set 1</th><th>nRBTP</th></tr>
<tr><td>0110B</td><td>4:1</td><td>12</td><td>13</td><td>2</td></tr>
<tr><td>0111B</td><td>4:1</td><td>13</td><td>14</td><td>2</td></tr>
<tr><td>1000B</td><td>4:1</td><td>15</td><td>16</td><td>3</td></tr>
<tr><td>1001B</td><td>4:1</td><td>17</td><td>18</td><td>4</td></tr>
<tr><td>1010B</td><td>4:1</td><td>18</td><td>20</td><td>4</td></tr>
<tr><td>1011B</td><td>4:1</td><td>19</td><td>21</td><td>4</td></tr>
</table>
All others are RFU</td><td>1,2,4,5</td></tr>
</table>

Table 61 MR2 Register definition (Cont'd)

Function	Register Type	Operand	Data	Notes
nWR (Write recovery)	Write-only	OP[7:4]	Refer to Table 62	1,2,3

NOTE 1 There are three physical registers assigned to each bit of this MR parameter, designated set point 0, set point 1 and set point 2. Only the registers for the set point determined by the state of the FSP-WR bit (MR16 OP[1:0]) will be written to with an MRW command to this MR address.

NOTE 2 There are three physical registers assigned to each bit of this MR parameter, designated set point 0 , set point 1 and set point 2. The device will operate only according to the values stored in the registers for the active set point, i.e., the set point determined by the state of the FSP-OP bit (MR16 OP[3:2]). The values in the registers for the inactive set point will be ignored by the device, and may be changed without affecting device operation.

NOTE 3 The programmed value of nWR is the number of clock cycles the LPDDR5-SDRAM device uses to determine the starting point of an internal Pre-charge operation after a Write burst with AP (auto-pre-charge) enabled.

NOTE 4 Some Operating features can affect Read Latency: (Link ECC off case)

Feature	Description
1	Byte Mode
2	Read DBI and/or Read Data Copy

RL Set 0 applies when no features are enabled
RL Set 1 applies when one feature is enabled (1 or 2)
RL Set 2 applies when two features are enabled

NOTE 5 RL Set 1 applies when the device is byte-mode. (Link ECC on case)

Table 62 - nWR Latency

OP[7:4]	WCK:CK Ratio	nWR						
		x16 w/o DVFSC w/o Link ECC	x8 w/o DVFSC w/o Link ECC	x16 w/o DVFSC w/ Link ECC	x8 w/o DVFSC w/ Link ECC	x16 w/ DVFSC w/o Link ECC	x8 w/ DVFSC w/o Link ECC	Unit
0000_B (Default)	2:1	5	5	N/A	N/A	6	6	nCK
0001_B	2:1	10	10	N/A	N/A	11	12	nCK
0010_B	2:1	14	15	N/A	N/A	17	18	nCK
0011_B	2:1	19	20	N/A	N/A	N/A	N/A	nCK
0100_B	2:1	24	25	N/A	N/A	N/A	N/A	nCK
0101_B	2:1	28	29	N/A	N/A	N/A	N/A	nCK
0000_B	4:1	3	3	N/A	N/A	3	3	nCK
0001_B	4:1	5	5	N/A	N/A	6	6	nCK
0010_B	4:1	7	8	N/A	N/A	9	9	nCK
0011_B	4:1	10	10	N/A	N/A	N/A	N/A	nCK
0100_B	4:1	12	13	N/A	N/A	N/A	N/A	nCK
0101_B	4:1	14	15	N/A	N/A	N/A	N/A	nCK
0110_B	4:1	16	17	18	19	N/A	N/A	nCK
0111_B	4:1	19	20	21	22	N/A	N/A	nCK
1000_B	4:1	21	22	23	24	N/A	N/A	nCK
1001_B	4:1	24	25	27	28	N/A	N/A	nCK
1010_B	4:1	26	28	29	31	N/A	N/A	nCK
1011_B	4:1	28	29	31	32	N/A	N/A	nCK

Table 63 — MR3 Register Information (MA[7:0] = 03_H)

OP[7]	OP[6]	OP[5]	OP[4]	OP[3]	OP[2]	OP[1]	OP[0]
DBI-WR	DBI-RD	WLS	BK/BG ORG		PDDS		

Table 64 — MR3 Definition

Function	Register Type	Operand	Data	Notes
PDDS (Pull-Down Drive Strength)	Write-only	OP[2:0]	000_B: RFU 001_B: RZQ/1 010_B: RZQ/2 011_B: RZQ/3 100_B: RZQ/4 101_B: RZQ/5 110_B: RZQ/6 (default) 111_B: Reserved	1,2,3
BK/BG ORG (Bank/Bank Group Organization)		OP[4:3]	00_B: BG Mode 01_B: 8B Mode 10_B: 16B Mode (default) 11_B: Reserved	2,3,5,6
WLS (Write Latency Set)		OP[5]	0_B: Write Latency Set “A” (default) 1_B: Write Latency Set “B”	2,3
DBI-RD (DBI-Read select)		OP[6]	0_B: Disabled (default) 1_B: Read DBI-DC Enabled	2,3
DBI-WR (DBI-Write select)		OP[7]	0_B: Disabled (default) 1_B: Write DBI-DC Enabled	2,3,4

NOTE 1 All values are "typical". The actual value after calibration will be within the specified tolerance for a given voltage and temperature. Re-calibration may be required as voltage and temperature vary.

NOTE 2 There are three physical registers assigned to each bit of this MR parameter, designated set point 0, set point 1, and set point 2. Only the registers for the set point determined by the state of the FSP-WR bit (MR16 OP[1:0]) will be written to with an MRW command to this MR address.

NOTE 3 There are three physical registers assigned to each bit of this MR parameter, designated set point 0, set point 1, and set point 2. The device will operate only according to the values stored in the registers for the active set point, i.e., the set point determined by the state of the FSP-OP bit (MR16 OP[3:2]). The values in the registers for the inactive set point will be ignored by the device, and may be changed without affecting device operation.

NOTE 4 Masked Write must use DBI DC only. For more details concerning masked writes with DBI enabled, refer to 7.4.10 for information on data bus inversion.

NOTE 5 16B Mode with DVFSC enabled can support up to 1600Mbps (≤1600Mbps). Please refer to operating frequency table in 2.2.5.

NOTE 6 The supported operation data rate for each Bank/Bank Group Organization is as follows.

- BG Mode for more than 3200Mbps (>3200Mbps).
- 8B Mode for all data rate range.
- 16B Mode for equal or less than 3200Mbps (≤3200Mbps).

Table 65 MR4 Register Information (MA[7:0] = 04_H)

OP[7]	OP[6]	OP[5]	OP[4]	OP[3]	OP[2]	OP[1]	OP[0]
TUF	ZQ Master	ZQUF	RM				

Table 66 - MR4 definition

Function	Register Type	Operand	Data	Notes
Refresh Multiplier (RM)	Read-only	OP[4:0]	00000_B: SDRAM Low temperature operating limit exceeded 00001_B: 8x 00010_B: 6x 00011_B: 4x 00100_B: 3.3x 00101_B: 2.5x 00110_B: 2.0x 00111_B: 1.7x 01000_B: 1.3x 01001_B: 1x 01010_B: 0.7x 01011_B: 0.5x 01100_B: 0.25x, no de-rating 01101_B: 0.25x, with de-rating 01110_B: 0.125x, no de-rating 01111_B: 0.125x, with de-rating 11111_B: SDRAM High temperature operating limit exceeded All others are reserved.	1,2,3,4,6,7
ZQUF (ZQ Update Flag)		OP[5]	0_B: No change in calibration code since previous ZQ Latch command 1_B: Calibration code has changed since previous ZQ Latch command	8
ZQ Master		OP[6]	0_B: Not a master die 1_B: Master die for ZQ Calibration purposes	9,10
TUF (Temperature Update Flag)		OP[7]	0_B: No change in OP[4:0] since last MR4 read 1_B: Change in OP[4:0] since last MR4 read (default)	5,6,7

NOTE 1 The refresh rate for each MR4-OP[4:0] setting applies to tREFI, tREFIpb, and tREFW. OP[4:0]= 01001_B corresponds to a device temperature of 85°C. Other values require either a longer (1.3x, 8x) refresh interval at lower temperatures, or a shorter (0.7x, 0.125x) refresh interval at higher temperatures. If OP[4:0] is from 01010_B to 11111_B, the device temperature is greater than 85°C.

NOTE 2 At higher temperatures (>85°C), AC timing derating may be required. If derating is required the LPDDR5-SDRAM will set OP[4:0]= 01101_B or 01111_B. See derating timing requirements in Section 9.2, Table 374.

NOTE 3 DRAM vendors may or may not report all of the possible settings over the operating temperature range of the device. Each vendor guarantees that their device will work at any temperature within the range using the refresh interval requested by their device.

NOTE 4 The device may not operate properly when OP[4:0]=00000_B or 11111_B.
NOTE 5 When OP[7]=1, the refresh rate reported in OP[4:0] has changed since the last MR4 read. A mode register read from MR4 will reset OP[7] to '0'.
NOTE 6 OP[4:0] bits are indicated the latest Refresh Rate whenever OP[7]=1_B.
NOTE 7 See the section on "Temperature Sensor" for information on the recommended frequency of reading MR4.
NOTE 8 After Power up initialization and reset sequence have been completed ZQUF MR4 OP[5] indicate 0_B.
NOTE 9 In command-based calibration mode, ZQCal Start commands only need to be issued to the ZQ Master die or dice to maintain accurate calibration. ZQCal Start commands received by non-ZQ Master die will be ignored. All die which share ZQ resources with a ZQ Master die that receives a valid ZQCal Start command will be calibrated. ZQCal Latch commands may be issued to each of these die after tZQCAL4, tZQCAL8 or tZQCAL16 has been met.
NOTE 10 LPDDR5 packages with more than one ZQ pin may include more than one ZQ Master die.

6.2.1 Mode Register definition (Cont'd)

Table 67 — MR5 Register Information (MA[7:0] = 05_H)

OP[7]	OP[6]	OP[5]	OP[4]	OP[3]	OP[2]	OP[1]	OP[0]
LPDDR5 Manufacturer ID							

Table 68 — MR5 Definition

Function	Register Type	Operand	Data	Notes
LPDDR5 Manufacturer ID	Read-only	OP[7:0]	See JEP166, LPDDR5 Manufacturer ID Codes	

Table 69 — MR6 Register Information (MA[7:0] = 06_H)

OP[7]	OP[6]	OP[5]	OP[4]	OP[3]	OP[2]	OP[1]	OP[0]
Revision ID-1							

Table 70 — MR6 Definition

Function	Register Type	Operand	Data	Notes
LPDDR5 Revision ID-1	Read-only	OP[7:0]	00000000_B: A-version 00000001_B: B-version	1

NOTE 1 MR6 is vendor specific.

Table 71 — MR7 Register Information (MA[7:0] = 07_H)

OP[7]	OP[6]	OP[5]	OP[4]	OP[3]	OP[2]	OP[1]	OP[0]
Revision ID-2							

Table 72 — MR7 Definition

Function	Register Type	Operand	Data	Notes
LPDDR5 Revision ID-2	Read-only	OP[7:0]	00000000_B: A-version 00000001_B: B-version	1

NOTE 1 MR7 is vendor specific.

6.2.1 Mode Register definition (Cont'd)

Table 73 — MR8 Register Information (MA[7:0] = 08_H)

OP[7]	OP[6]	OP[5]	OP[4]	OP[3]	OP[2]	OP[1]	OP[0]
IO Width		Density				Type	

Table 74 — MR8 Definition

Function	Register Type	Operand	Data	Notes
Type	Read-only	OP[1:0]	00_B: S32 (32n pre-fetch/8Banks), S16 SDRAM (16n pre-fetch/4Banks 4Bank Groups), S16 SDRAM (16n pre-fetch /16 Banks) All Others: Reserved	
Density		OP[5:2]	0000_B: 2Gb 0001_B: 3Gb 0010_B: 4Gb 0011_B: 6Gb 0100_B: 8Gb 0101_B: 12Gb 0110_B: 16Gb 0111_B: 24Gb 1000_B: 32Gb All Others: Reserved	
IO Width		OP[7:6]	00_B: x16 01_B: x8 All Others: Reserved	

Table 75 — MR9 Register Information (MA[7:0] = 09_H)

OP[7]	OP[6]	OP[5]	OP[4]	OP[3]	OP[2]	OP[1]	OP[0]
Vendor Specific Test Register							

Table 76 — MR9 Definition

Function	Register Type	Operand	Data	Notes
Vendor Specific Test Register	Write-only	OP[7:0]	Vendor Specific	1

NOTE 1 Only 00_H should be written to this register.

6.2.1 Mode Register definition (Cont'd)

Table 77 — MR10 Register Information (MA [7:0] = $0A_H$)

OP[7]	OP[6]	OP[5]	OP[4]	OP[3]	OP[2]	OP[1]	OP[0]
RDQS PST		RDQS PRE		WCK PST		RFU	RPST Mode

Table 78 — MR10 Definition

Function	Register Type	Operand	Data	Notes
RDQS Post-amble mode	Write-only	OP[0]	0_B: Toggle Mode (default) 1_B: Static Mode	1,2,3
WCK PST (WCK Post-amble Length)		OP[3:2]	00_B: 2.5*tWCK (default) 01_B: 4.5*tWCK 10_B: 6.5*tWCK 11_B: Reserved	1,2,3,4,5
RDQS PRE (RD Pre-amble Length)		OP[5:4]	00_B: Static:4*tWCK,Toggle:0 (Default) 01_B: Static:2*tWCK,Toggle:2*tWCK 10_B: Static:0,Toggle:4*tWCK 11_B: Static:tRDQS_PRE, Toggle:4*tWCK	1,2,3,6,7
RDQS PST (RD Post-amble Length)		OP[7:6]	00_B: 0.5*tWCK (Default) 01_B: 2.5*tWCK 10_B: 4.5*tWCK 11_B: Reserved	1,2,3,4

NOTE 1 All units are tWCK.
NOTE 2 There are three physical registers assigned to each bit of this MR parameter, designated set point 0, set point 1, and set point 2. Only the registers for the set point determined by the state of the FSP-WR bit (MR16 OP[1:0]) will be written to with an MRW command to this MR address.
NOTE 3 There are three physical registers assigned to each bit of this MR parameter, designated set point 0, set point 1, and set point 2. The device will operate only according to the values stored in the registers for the active set point, i.e., the set point determined by the state of the FSP-OP bit (MR16 OP[3:2]). The values in the registers for the inactive set point will be ignored by the device, and may be changed without affecting device operation.
NOTE 4 tWCKPST length should be larger than tRPST length.
NOTE 5 WCK PST OP[3:2] applies to both read and write operation timing as same setting.
NOTE 6 OP[5:4]=11_B can be supported over 3200Mbps operation and tRDQS_PRE is Min 2*tWCK and Max 4*tWCK.
NOTE 7 OP[5:4]=00_B/01_B/10_B can be supported over all frequency range.

6.2.1 Mode Register definition (Cont'd)

Table 79 - MR11 Register Information (MA[7:0] = $0B_H$)

OP[7]	OP[6]	OP[5]	OP[4]	OP[3]	OP[2]	OP[1]	OP[0]
RFU	CA ODT			NT-ODT Enable	DQ ODT		

Table 80 - MR11 Definition

Function	Register Type	Operand	Data	Notes
DQ ODT (DQ Bus Receiver On-Die-Termination)	Read/ Write	OP[2:0]	000_B: Disable (Default) 001_B: RZQ/1 010_B: RZQ/2 011_B: RZQ/3 100_B: RZQ/4 101_B: RZQ/5 110_B: RZQ/6 111_B: RFU	1,2,3
NT-ODT Enable (Non Target ODT Enable)		OP[3]	0_B: Non-Target ODT is disabled (Default) 1_B: Non-Target ODT is enabled	2,3
CA ODT (CA Bus Receiver On-Die-Termination)		OP[6:4]	000_B: Disable (Default) 001_B: RZQ/1 010_B: RZQ/2 011_B: RZQ/3 100_B: RZQ/4 101_B: RZQ/5 110_B: RZQ/6 111_B: RFU	1,2,3

NOTE 1 All values are "typical". The actual value after calibration will be within the specified tolerance for a given voltage and temperature. Re-calibration may be required as voltage and temperature vary.

NOTE 2 There are three physical registers assigned to each bit of this MR parameter, designated set point 0, set point 1 and set point 2. Only the registers for the set point determined by the state of the FSP-WR bit (MR16 OP[1:0]) will be written to with an MRW command to this MR address.

NOTE 3 There are three physical registers assigned to each bit of this MR parameter, designated set point 0, set point 1 and set point 2. The device will operate only according to the values stored in the registers for the active set point, i.e., the set point determined by the state of the FSP-OP bit (MR16 OP[3:2]). The values in the registers for the inactive set point will be ignored by the device, and may be changed without affecting device operation.

6.2.1 Mode Register definition (Cont'd)

Table 81 — MR12 Register Information (MA[5:0] = $0C_H$)

OP[7]	OP[6]	OP[5]	OP[4]	OP[3]	OP[2]	OP[1]	OP[0]
VBS	V_{REF}(CA)						

Table 82 — MR12 Definition

Function	Register Type	Operand	Data	Notes
V_{REF}(CA) (V_{REF}(CA) Setting)	Read/ Write	OP[6:0]	0000000_B: -- Thru -- 1111111_B: See table below	1,2,3,4, 5,7
VBS (V_{REF}(CA) Byte Select)	Write	OP[7]	0_B: Write the V_{REF}(CA) values to OP[6:0] for x16 device, and Byte mode device which is assigned lower byte: DQ[7:0]. 1_B: Write the $_{VREF}$(CA) values to OP[6:0] for Byte mode device which is assigned upper byte: DQ[15:8].	6,7

NOTE 1 This register controls the VREF(CA) levels for Frequency-Set-Point[2:0].

NOTE 2 A read (MRR) to this register places the contents of OP[6:0] on DQ[6:0]. DQ[7] will read 0B. See 7.6.1 for more information on MRR Operation.

NOTE 3 A write to MR12 OP[6:0] sets the internal VREF(CA) level for FSP[0] when MR16 OP[1:0]=00B, sets FSP[1] when MR16 OP[1:0]=01B or sets FSP[2] when MR16 OP[1:0]=10B. The time required for VREF(CA) to reach the set level depends on the step size from the current level to the new level. See 4.2.2 for more information on VREF(CA) training.

NOTE 4 There are three physical registers assigned to each bit of this MR parameter, designated set point 0, set point 1, and set point 2. Only the registers for the set point determined by the state of the FSP-WR bit (MR16 OP[1:0]) will be written to with an MRW command to this MR address, or read from with an MRR command to this address.

NOTE 5 There are three physical registers assigned to each bit of this MR parameter, designated set point 0, set point 1, and set point 2. The device will operate only according to the values stored in the registers for the active set point, i.e., the set point determined by the state of the FSP-OP bit (MR16 OP[3:2]). The values in the registers for the inactive set point will be ignored by the device, and may be changed without affecting device operation.

NOTE 6 Even if when the MRW command issues to the x16 device, writing "0" to OP[7] which is not a sticky bit is required.

NOTE 7 Byte Mode device output each individual MR12 OP[6:0] from DQ[7:0] for lower byte device and from DQ[15:8] for upper byte device by MRR command. OP[7] controls only the MRW operation.

6.2.1 Mode Register definition (Cont'd)

Table 83 — MR12 V_{REF}(CA) Settings

Function	Operand	V_{REF} Values (% of VDDQ)								Notes
V_{REF} Settings for MR12	OP [6:0]	0000000_B:	10.0*5	0100000_B:	26.0	1000000_B:	42.0	1100000_B:	58.0	1,2,3,4
		0000001_B:	10.5*5	0100001_B:	26.5	1000001_B:	42.5	1100001_B:	58.5	
		0000010_B:	11.0*5	0100010_B:	27.0	1000010_B:	43.0	1100010_B:	59.0	
		0000011_B:	11.5*5	0100011_B:	27.5	1000011_B:	43.5	1100011_B:	59.5	
		0000100_B:	12.0*5	0100100_B:	28.0	1000100_B:	44.0	1100100_B:	60.0	
		0000101_B:	12.5*5	0100101_B:	28.5	1000101_B:	44.5	1100101_B:	60.5	
		0000110_B:	13.0*5	0100110_B:	29.0	1000110_B:	45.0	1100110_B:	61.0	
		0000111_B:	13.5*5	0100111_B:	29.5	1000111_B:	45.5	1100111_B:	61.5	
		0001000_B:	14.0*5	0101000_B:	30.0	1001000_B:	46.0	1101000_B:	62.0	
		0001001_B:	14.5*5	0101001_B:	30.5	1001001_B:	46.5	1101001_B:	62.5	
		0001010_B:	15.0	0101010_B:	31.0	1001010_B:	47.0	1101010_B:	63.0	
		0001011_B:	15.5	0101011_B:	31.5	1001011_B:	47.5	1101011_B:	63.5	
		0001100_B:	16.0	0101100_B:	32.0	1001100_B:	48.0	1101100_B:	64.0	
		0001101_B:	16.5	0101101_B:	32.5	1001101_B:	48.5	1101101_B:	64.5	
		0001110_B:	17.0	0101110_B:	33.0	1001110_B:	49.0	1101110_B:	65.0	
		0001111_B:	17.5	0101111_B:	33.5	1001111_B:	49.5	1101111_B:	65.5	
		0010000_B:	18.0	0110000_B:	34.0	1010000_B: (default)	50.0	1110000_B:	66.0	
		0010001_B:	18.5	0110001_B:	34.5	1010001_B:	50.5	1110001_B:	66.5	
		0010010_B:	19.0	0110010_B:	35.0	1010010_B:	51.0	1110010_B:	67.0	
		0010011_B:	19.5	0110011_B:	35.5	1010011_B:	51.5	1110011_B:	67.5	
		0010100_B:	20.0	0110100_B:	36.0	1010100_B:	52.0	1110100_B:	68.0	
		0010101_B:	20.5	0110101_B:	36.5	1010101_B:	52.5	1110101_B:	68.5	
		0010110_B:	21.0	0110110_B:	37.0	1010110_B:	53.0	1110110_B:	69.0	
		0010111_B:	21.5	0110111_B:	37.5	1010111_B:	53.5	1110111_B:	69.5	
		0011000_B:	22.0	0111000_B:	38.0	1011000_B:	54.0	1111000_B:	70.0	
		0011001_B:	22.5	0111001_B:	38.5	1011001_B:	54.5	1111001_B:	70.5	
		0011010_B:	23.0	0111010_B:	39.0	1011010_B:	55.0	1111010_B:	71.0	
		0011011_B:	23.5	0111011_B:	39.5	1011011_B:	55.5	1111011_B:	71.5	
		0011100_B:	24.0	0111100_B:	40.0	1011100_B:	56.0	1111100_B:	72.0	
		0011101_B:	24.5	0111101_B:	40.5	1011101_B:	56.5	1111101_B:	72.5	
		0011110_B:	25.0	0111110_B:	41.0	1011110_B:	57.0	1111110_B:	73.0	
		0011111_B:	25.5	0111111_B:	41.5	1011111_B:	57.5	1111111_B:	73.5	

NOTE 1 These values may be used for MR12 OP[6:0] to set the VREF(CA) levels in the LPDDR5-SDRAM.

NOTE 2 The MR12 registers represents either FSP[0], FSP[1] or FSP[2]. Three frequency-set-points each for CA and CK are provided to allow for faster switching between terminated and un-terminated operation, or between different high-frequency setting which may use different terminations values.

NOTE 3 Absolute CA VREF low level (%code * VDDQ) must be higher than or equal to 75mV for normal operation. Vref error is not included this calculation.

NOTE 4 Absolute CA Vref high level (%code * VDDQ) must be lower than or equal to 350mV. Vref error is not included this calculation.

NOTE 5 Vref codes from 0000000_B to 0001001_B are able to be used only for testing purpose not for normal operation. Vref accuracy are not guaranteed from 0000000_B to 0001001_B.

6.2.1 Mode Register definition (Cont'd)

Table 84 — MR13 Register Information (MA[5:0] = $0D_H$)

OP[7]	OP[6]	OP[5]	OP[4]	OP[3]	OP[2]	OP[1]	OP[0]
Dual VDD2	CBT Mode	DMD	DMI I/O Control	RFU	VRO	Thermal Offset	

Table 85 — MR13 Definition

Function	Register Type	Operand	Data	Notes
Thermal Offset	Write-only	OP[1:0]	00_B: No offset, 0~5°C gradient (default) 01_B: 5°C offset, 5~10°C gradient 10_B: 10°C offset, 10~15°C gradient 11_B: Reserved	
VRO (VREF Output)		OP[2]	0_B: Normal operation (default) 1_B: Output the VREF(CA) and VREF(DQ) values on DQ bits	1
DMI I/O Control (DMI input/output behavior control Mode)		OP[4]	0_B: DMI Output behavior follows MR setting Read DBI, Read Link ECC and Read Data Copy (default) 1_B: DMI outputs a valid data, if Read FIFO Command and Read DQ Calibration Command is issued when Data Mask and/or Write DBI are enabled even though Read DBI, Read Link ECC and Read Data Copy are disabled	6
DMD (Data Mask Disable)		OP[5]	0_B: Data Mask Operation Enabled (default) 1_B: Data Mask Operation Disabled	5
CBT Mode		OP[6]	0_B: CBT Training Mode 1 (default) 1_B: CBT Training Mode 2	
Dual VDD2		OP[7]	0_B: Dual VDD2 rail (1.05V & 0.9V) used (default) 1_B: Single 1.05V VDD2 rail used	2,3,4

NOTE 1 When set, the LPDDR5-SDRAM will output the VREF(CA) and VREF(DQ) voltages on DQ pins. Only the "active" frequency-set-point, as defined by MR16 OP[3:2], will be output on the DQ pins. This function allows an external test system to measure the internal VREF levels and its accuracy is guaranteed at or less than 25°C. The DQ pins used for VREF output are vendor specific.

NOTE 2 LPDDR5 SDRAM may be powered up / initialized/ reset using either a single or dual VDD2 configuration regardless of the OP[7] setting. OP[7] shall be set based on the VDD2 configuration during initialization before normal operation. See Section 4.1 for additional information.

NOTE 3 In the single VDD2 configuration (1.05V), the same voltage shall be supplied to all VDD2L and VDD2H balls.

NOTE 4 When enabled (OP[7]=1_B), MR19 OP[1:0] setting is ignored and DRAM operates in High Speed mode.

NOTE 5 When enabled (OP[5]=0_B) data masking is enabled for the device. When disabled (OP[5]=1_B), masked write command is illegal. See 4.15, LPDDR5 Data Mask (DM) and Data Bus Inversion (DBI) Function.

NOTE 6 DMI I/O Control: MR13 OP[4]=1_B is optional. Refer to vendor's data sheet. And the feature of DMI input/output behavior control Mode is defined at Read DQ Calibration and WCK - DQ (FIFO) training section.

6.2.1 Mode Register definition (Cont'd)

Table 86 — MR14 Register Information (MA[7:0] = $0E_H$)

OP[7]	OP[6]	OP[5]	OP[4]	OP[3]	OP[2]	OP[1]	OP[0]
VDLC	V_{REF}(DQ[7:0])						

Table 87 — MR14 definition

Function	Register Type	Operand	Data	Notes
V_{REF}(DQ[7:0]) (V_{REF}(DQ[7:0]) Setting)	Read/ Write	OP[6:0]	0000000_B: -- Thru -- 1111111_B: See table below	1,2,3,4,5
VDLC (V_{REF} DQ Lower byte copy)		OP[7]	X16 device only 0_B: V_{REF} (DQ[15:8]) follow MR15 OP[6:0] code (default) 1_B: V_{REF}(DQ[15:8]) follow MR14 OP[6:0] code Byte Mode device ignores OP[7]	6,7

NOTE 1 This register controls the V_{REF}(DQ[7:0]) levels for Frequency-Set-Point[2:0].

NOTE 2 A read (MRR) to this register places the contents of OP[7:0] on DQ[7:0]. Any RFU bits and unused DQ's shall be set to'0'. See 7.6.1 for more information on MRR Operation.

NOTE 3 A write to OP[6:0] sets the internal V_{REF}(DQ[7:0]) level for FSP[0] when MR16 OP[1:0]=00_B, sets FSP[1] when MR16 OP[1:0]=01_B or sets FSP[2] when MR16 OP[1:0]=10_B. The time required for V_{REF}(DQ[7:0]) to reach the set level depends on the step size from the current level to the new level. See 4.1.1 for more information on V_{REF}(DQ) training.

NOTE 4 There are three physical registers assigned to each bit of this MR parameter, designated set point 0, set point 1, and set point 2. Only the registers for the set point determined by the state of the FSP-WR bit (MR16 OP[1:0]) will be written to with an MRW command to this MR address, or read from with an MRR command to this address.

NOTE 5 There are three physical registers assigned to each bit of this MR parameter, designated set point 0, set point 1, and set point 2. The device will operate only according to the values stored in the registers for the active set point, i.e., the set point determined by the state of the FSP-OP bit (MR16 OP[3:2]). The values in the registers for the inactive set point will be ignored by the device, and may be changed without affecting device operation.

NOTE 6 When OP[7] is 1B, MR14 MRR will return V_{REF}(DQ[15:8]) and MR15 MRR value is undefined. To verify the V_{REF} code, please refer to Table 88 for MR14 OP[6:0].

NOTE 7 Byte mode device doesn't support VDLC function. SOC need to set MR14 and MR15 to individual devices.

6.2.1 Mode Register definition (Cont'd)

Table 88 — MR14 V_{REF}(DQ[7:0]) Settings

Function	Operand	V_{REF} Values (% of V_{DDQ})								Notes
V_{REF} Settings for MR14	OP [6:0]	0000000_B:	10.0*5	0100000_B:	26.0	1000000_B:	42.0	1100000_B:	58.0	1,2,3,4
		0000001_B:	10.5*5	0100001_B:	26.5	1000001_B:	42.5	1100001_B:	58.5	
		0000010_B:	11.0*5	0100010_B:	27.0	1000010_B:	43.0	1100010_B:	59.0	
		0000011_B:	11.5*5	0100011_B:	27.5	1000011_B:	43.5	1100011_B:	59.5	
		0000100_B:	12.0*5	0100100_B:	28.0	1000100_B:	44.0	1100100_B:	60.0	
		0000101_B:	12.5*5	0100101_B:	28.5	1000101_B:	44.5	1100101_B:	60.5	
		0000110_B:	13.0*5	0100110_B:	29.0	1000110_B:	45.0	1100110_B:	61.0	
		0000111_B:	13.5*5	0100111_B:	29.5	1000111_B:	45.5	1100111_B:	61.5	
		0001000_B:	14.0*5	0101000_B:	30.0	1001000_B:	46.0	1101000_B:	62.0	
		0001001_B:	14.5*5	0101001_B:	30.5	1001001_B:	46.5	1101001_B:	62.5	
		0001010_B:	15.0	0101010_B:	31.0	1001010_B:	47.0	1101010_B:	63.0	
		0001011_B:	15.5	0101011_B:	31.5	1001011_B:	47.5	1101011_B:	63.5	
		0001100_B:	16.0	0101100_B:	32.0	1001100_B:	48.0	1101100_B:	64.0	
		0001101_B:	16.5	0101101_B:	32.5	1001101_B:	48.5	1101101_B:	64.5	
		0001110_B:	17.0	0101110_B:	33.0	1001110_B:	49.0	1101110_B:	65.0	
		0001111_B:	17.5	0101111_B:	33.5	1001111_B:	49.5	1101111_B:	65.5	
		0010000_B:	18.0	0110000_B:	34.0	1010000_B: (default)	50.0	1110000_B:	66.0	
		0010001_B:	18.5	0110001_B:	34.5	1010001_B:	50.5	1110001_B:	66.5	
		0010010_B:	19.0	0110010_B:	35.0	1010010_B:	51.0	1110010_B:	67.0	
		0010011_B:	19.5	0110011_B:	35.5	1010011_B:	51.5	1110011_B:	67.5	
		0010100_B:	20.0	0110100_B:	36.0	1010100_B:	52.0	1110100_B:	68.0	
		0010101_B:	20.5	0110101_B:	36.5	1010101_B:	52.5	1110101_B:	68.5	
		0010110_B:	21.0	0110110_B:	37.0	1010110_B:	53.0	1110110_B:	69.0	
		0010111_B:	21.5	0110111_B:	37.5	1010111_B:	53.5	1110111_B:	69.5	
		0011000_B:	22.0	0111000_B:	38.0	1011000_B:	54.0	1111000_B:	70.0	
		0011001_B:	22.5	0111001_B:	38.5	1011001_B:	54.5	1111001_B:	70.5	
		0011010_B:	23.0	0111010_B:	39.0	1011010_B:	55.0	1111010_B:	71.0	
		0011011_B:	23.5	0111011_B:	39.5	1011011_B:	55.5	1111011_B:	71.5	
		0011100_B:	24.0	0111100_B:	40.0	1011100_B:	56.0	1111100_B:	72.0	
		0011101_B:	24.5	0111101_B:	40.5	1011101_B:	56.5	1111101_B:	72.5	
		0011110_B:	25.0	0111110_B:	41.0	1011110_B:	57.0	1111110_B:	73.0	
		0011111_B:	25.5	0111111_B:	41.5	1011111_B:	57.5	1111111_B:	73.5	

NOTE 1 These values may be used for MR14 OP[6:0] to set the V_{REF}(DQ[7:0]) levels in the LPDDR5-SDRAM.

NOTE 2 The MR14 registers represents either FSP[0], FSP[1] or FSP[2]. Three frequency-set-points each for DQ are provided to allow for faster switching between terminated and un-terminated operation, or between different high-frequency setting which may use different terminations values.

NOTE 3 Absolute DQ[7:0] Vref low level (%code * VDDQ) must be higher than or equal to 75mV for normal operation. Vref error is not include this calculation.

NOTE 4 Absolute DQ[7:0] Vref high level (%code * VDDQ) must be lower than or equal to 350mV when WCK is less than or equal to 1600MHz. Absolute DQ[7:0] Vref high level (%code * VDDQ) must be lower than or equal to 225mV when WCK is higher than 1600MHz. V_{REF} error is not included this calculation.

6.2.1 Mode Register definition (Cont'd)

Table 89 — MR15 Register Information (MA[7:0] = $0F_H$)

OP[7]	OP[6]	OP[5]	OP[4]	OP[3]	OP[2]	OP[1]	OP[0]
RFU	V_{REF}(DQ[15:8])						

Table 90 — MR15 definition

Function	Register Type	Operand	Data	Notes
V_{REF}(DQ[15:8]) (V_{REF}(DQ[15:8]) Setting)	Read/ Write	OP[6:0]	0000000_B: -- Thru -- 1111111_B: See table below	1,2,3, 4,5,6

NOTE 1 This register controls the V_{REF}(DQ[15:8]) levels for Frequency-Set-Point[2:0].

NOTE 2 A read (MRR) to this register places the contents of OP[7:0] on DQ[15:8]. Any RFU bits and unused DQ's shall be set to'0'. See 7.6.1 for more information on MRR Operation.

NOTE 3 A write to OP[6:0] sets the internal V_{REF}(DQ[15:8]) level for FSP[0] when MR16 OP[1:0]=00_B, sets FSP[1] when MR16 OP[1:0]=01_B or sets FSP[2] when MR16 OP[1:0]=10_B. The time required for V_{REF}(DQ[15:8]) to reach the set level depends on the step size from the current level to the new level. See 4.1.1 for more information on V_{REF}(DQ) training.

NOTE 4 There are three physical registers assigned to each bit of this MR parameter, designated set point 0, set point 1, and set point 2. Only the registers for the set point determined by the state of the FSP-WR bit (MR16 OP[1:0]) will be written to with an MRW command to this MR address, or read from with an MRR command to this address.

NOTE 5 There are three physical registers assigned to each bit of this MR parameter, designated set point 0, set point 1 and set point 2. The device will operate only according to the values stored in the registers for the active set point, i.e., the set point determined by the state of the FSP-OP bit (MR16 OP[3:2]). The values in the registers for the inactive set point will be ignored by the device, and may be changed without affecting device operation.

NOTE 6 MR15 MRR value is undefined when MR14 OP[7] is 1B. When MR14 OP[7] is 1_B, VREF(DQ[15:8] can be read from MR14.

6.2.1 Mode Register definition (Cont'd)

Table 91 — MR15 VREF(DQ[15:8]) Settings

Function	Operand	V_{REF} Values (% of V_{DDQ})								Notes
V_{REF} Settings for MR15	OP [6:0]	0000000_B:	10.0*5	0100000_B:	26.0	1000000_B:	42.0	1100000_B:	58.0	1,2,3,4
		0000001_B:	10.5*5	0100001_B:	26.5	1000001_B:	42.5	1100001_B:	58.5	
		0000010_B:	11.0*5	0100010_B:	27.0	1000010_B:	43.0	1100010_B:	59.0	
		0000011_B:	11.5*5	0100011_B:	27.5	1000011_B:	43.5	1100011_B:	59.5	
		0000100_B:	12.0*5	0100100_B:	28.0	1000100_B:	44.0	1100100_B:	60.0	
		0000101_B:	12.5*5	0100101_B:	28.5	1000101_B:	44.5	1100101_B:	60.5	
		0000110_B:	13.0*5	0100110_B:	29.0	1000110_B:	45.0	1100110_B:	61.0	
		0000111_B:	13.5*5	0100111_B:	29.5	1000111_B:	45.5	1100111_B:	61.5	
		0001000_B:	14.0*5	0101000_B:	30.0	1001000_B:	46.0	1101000_B:	62.0	
		0001001_B:	14.5*5	0101001_B:	30.5	1001001_B:	46.5	1101001_B:	62.5	
		0001010_B:	15.0	0101010_B:	31.0	1001010_B:	47.0	1101010_B:	63.0	
		0001011_B:	15.5	0101011_B:	31.5	1001011_B:	47.5	1101011_B:	63.5	
		0001100_B:	16.0	0101100_B:	32.0	1001100_B:	48.0	1101100_B:	64.0	
		0001101_B:	16.5	0101101_B:	32.5	1001101_B:	48.5	1101101_B:	64.5	
		0001110_B:	17.0	0101110_B:	33.0	1001110_B:	49.0	1101110_B:	65.0	
		0001111_B:	17.5	0101111_B:	33.5	1001111_B:	49.5	1101111_B:	65.5	
		0010000_B:	18.0	0110000_B:	34.0	1010000_B: (default)	50.0	1110000_B:	66.0	
		0010001_B:	18.5	0110001_B:	34.5	1010001_B:	50.5	1110001_B:	66.5	
		0010010_B:	19.0	0110010_B:	35.0	1010010_B:	51.0	1110010_B:	67.0	
		0010011_B:	19.5	0110011_B:	35.5	1010011_B:	51.5	1110011_B:	67.5	
		0010100_B:	20.0	0110100_B:	36.0	1010100_B:	52.0	1110100_B:	68.0	
		0010101_B:	20.5	0110101_B:	36.5	1010101_B:	52.5	1110101_B:	68.5	
		0010110_B:	21.0	0110110_B:	37.0	1010110_B:	53.0	1110110_B:	69.0	
		0010111_B:	21.5	0110111_B:	37.5	1010111_B:	53.5	1110111_B:	69.5	
		0011000_B:	22.0	0111000_B:	38.0	1011000_B:	54.0	1111000_B:	70.0	
		0011001_B:	22.5	0111001_B:	38.5	1011001_B:	54.5	1111001_B:	70.5	
		0011010_B:	23.0	0111010_B:	39.0	1011010_B:	55.0	1111010_B:	71.0	
		0011011_B:	23.5	0111011_B:	39.5	1011011_B:	55.5	1111011_B:	71.5	
		0011100_B:	24.0	0111100_B:	40.0	1011100_B:	56.0	1111100_B:	72.0	
		0011101_B:	24.5	0111101_B:	40.5	1011101_B:	56.5	1111101_B:	72.5	
		0011110_B:	25.0	0111110_B:	41.0	1011110_B:	57.0	1111110_B:	73.0	
		0011111_B:	25.5	0111111_B:	41.5	1011111_B:	57.5	1111111_B:	73.5	

NOTE 1 These values may be used for MR15 OP[6:0] to set the V_{REF}(DQ[15:8]) levels in the LPDDR5 SDRAM.
NOTE 2 The MR15 registers represents either FSP[0], FSP[1] or FSP[2]. Three frequency-set-points each for DQ are provided to allow for faster switching between terminated and un-terminated operation, or between different high-frequency setting which may use different terminations values.
NOTE 3 Absolute DQ[15:8] V_{REF} low level (%code * VDDQ) must be higher than or equal to 75mV for normal operation. V_{REF} error is not included in this calculation.
NOTE 4 Absolute DQ[15:8] V_{REF} high level (%code * VDDQ) must be lower than or equal to 350mV when WCK is less than or equal to 1600MHz. Absolute DQ[15:8] V_{REF} high level (%code * VDDQ) must be lower than or equal to 225mV when WCK is higher than 1600MHz. V_{REF} error is not included in this calculation.
NOTE 5 V_{REF} codes from 0000000_B to 0001001_B are able to be used only for testing purpose not for normal operation. V_{REF} accuracy are not guaranteed from 0000000_B to 0001001_B.

6.2.1 Mode Register definition (Cont'd)

Table 92 — MR16 Register Information (MA[5:0] = 10_H)

OP[7]	OP[6]	OP[5]	OP[4]	OP[3]	OP[2]	OP[1]	OP[0]
CBT-Phase	VRCG	CBT		FSP-OP		FSP-WR	

Table 93 — MR16 definition

Function	Register Type	Operand	Data	Notes
FSP-WR (Frequency Set Point Write Enable)	Write/ Read	OP[1:0]	00_B: Frequency-Set-Point [0] (default) 01_B: Frequency-Set-Point [1] 10_B: Frequency-Set-Point [2] 11_B: Reserved	1
FSP-OP (Frequency Set Point Operation Mode)		OP[3:2]	00_B: Frequency-Set-Point [0] (default) 01_B: Frequency-Set-Point [1] 10_B: Frequency-Set-Point [2] 11_B: Reserved	2
CBT (Command Bus Training)		OP[5:4]	00_B: Normal Operation (default) 01_B: Command Bus Training Mode Enabled FSP0 10_B: Command Bus Training Mode Enabled FSP1 11_B: Command Bus Training Mode Enabled FSP2	3
VRCG (VREF Current Generator)		OP[6]	0_B: Normal Operation (default) 1_B: VREF Fast Response (high current) mode	4
CBT-Phase		OP[7]	0_B: DQ outputs CA pattern latched by CK rising edge (default) 1_B: DQ outputs CA pattern latched by CK falling edge	

NOTE 1 FSP-WR determines which frequency-set-point registers are accessed with MRW commands for the following functions such as V_{REF}(CA) Setting, V_{REF}(DQ) Setting. For more information, refer to 7.6.3, Frequency Set Point.

NOTE 2 FSP-OP determines which frequency-set-point register values are currently used to specify device operation for the following functions such as V_{REF}(CA) Setting, V_{REF}(DQ) Setting. For more information, refer to 7.6.3, Frequency Set Point.

NOTE 3 A write to set OP[5:4]= 01_B, 10_B or 11_B causes the LPDDR5-SDRAM to enter the Command Bus Training mode. When OP[5:4]= 01_B, 10_B or 11_B, commands are ignored and the contents of CA[6:0] are mapped to the DQ bus. See the Command Bus Training (4.2.2) for more information.

NOTE 4 When OP[6]=1_B, the VREF circuit uses a high-current mode to improve VREF settling time.

Table 94 — MR17 Register Information (MA[5:0] = 11_H)

OP[7]	OP[6]	OP[5]	OP[4]	OP[3]	OP[2]	OP[1]	OP[0]
x8ODTD Upper	x8ODTD Lower	ODTD-CA	ODTD-CS	ODTD-CK	SOC ODT		

Table 95 — MR17 definition

Function	Register Type	Operand	Data	Notes
SoC ODT (Controller ODT Value for VOH calibration)	Write-only	OP[2:0]	000_B: Disable (default) 001_B: RZQ/1 010_B: RZQ/2 011_B: RZQ/3 100_B: RZQ/4 101_B: RZQ/5 110_B: RZQ/6 111_B: RFU	1,2,3,6
ODTD-CK (CK ODT termination)		OP[3]	0_B: ODTD-CK Enable 1_B: ODTD-CK Disable(default)	2,3,4
ODTD-CS (CS ODT termination)		OP[4]	0_B: ODTD-CS Enable RZQ/3 1_B: ODTD-CS Disable(default)	2,3,5,7
ODTD-CA (CA ODT termination)		OP[5]	0_B: ODTD-CA Enable 1_B: ODTD-CA Disable(default)	2,3,4
X8 ODTD Lower (CA/CS/CK ODT termination disable, Lower Byte select)		OP[6]	x8 per ch. only, Lower Byte selected Device 0_B: ODTD-CA/CS/CK follows MR17 OP[5], OP[4], OP[3] & MR11 OP[6:4] (default) 1_B: ODTD-CA/CS/CK Disabled	7
X8 ODTD Upper (CA/CS/CK ODT termination disable, Upper Byte select)		OP[7]	x8 per ch. only, Upper Byte selected Device 0_B: ODTD-CA/CS/CK follows MR17 OP[5], OP[4], OP[3] & MR11 OP[6:4] (default) 1_B: ODTD-CA/CS/CK Disabled	7

NOTE 1 All values are “typical".

NOTE 2 There are three physical registers assigned to each bit of this MR parameter, designated set point 0, set point 1 and set point 2. Only the registers for the set point determined by the state of the FSP-WR bit (MR16 OP[1:0]) will be written to with an MRW command to this MR address.

NOTE 3 There are three physical registers assigned to each bit of this MR parameter, designated set point 0, set point 1 and set point 2. The device will operate only according to the values stored in the registers for the active set point, i.e., the set point determined by the state of the FSP-OP bit (MR16 OP[3:2]). The values in the registers for the inactive set point will be ignored by the device, and may be changed without affecting device operation.

NOTE 4 To ensure proper operation in a multi-rank configuration, when CA, CK ODT is enabled via MR11 OP[6:4], MR17 OP[3] and OP[5], the rank providing ODT will continue to terminate the command bus in all DRAM states including Active Self-refresh, Self-refresh Power-down, Active Power-down and Idle Power-down.

NOTE 5 To ensure proper operation in a multi-rank configuration, when CS is enabled via MR17 OP[4], the rank providing ODT will continue to terminate in all DRAM states except Idle Power-down, Active Power-down, Self-refresh Power-down and Deep Sleep Mode. CS ODT state goes OFF ignoring MRS ODT state after Power-Down Entry is issued and returns to MRS ODT state with Power-Down Exit.

NOTE 6 DRAM Pull-up driver strength is controlled by OP[2:O] SOC ODT setting when DQ termination is disabled.

NOTE 7 DRAM will ignore all CS ODT settings, and CS will remain unterminated at all times, when MR21 OP[3] = 0_B.

6.2.1 Mode Register definition (Cont'd)

Table 96 — MR18 Register Information (MA[7:0] = 12_H)

OP[7]	OP[6]	OP[5]	OP[4]	OP[3]	OP[2]	OP[1]	OP[0]
CKR	WCK2CK Leveling	RFU	WCK ON	WCK_FM	WCK ODT		

Table 97 — MR18 Definition

Function	Register Type	Operand	Data	Notes
WCK ODT	Write-only	OP[2:0]	000_B: ODT disable (default) 001_B: RZQ/1 010_B: RZQ/2 011_B: RZQ/3 100_B: RZQ/4 101_B: RZQ/5 110_B: RZQ/6 111_B: RFU	1,2,4
WCK FM (WCK Frequency Mode)		OP[3]	0_B: Low frequency mode (default) 1_B: High frequency mode	1,2,5
WCK ON (WCK always ON mode)		OP[4]	0_B: WCK Always On Mode disabled (Default) 1_B: WCK Always On Mode enabled	1,2
WCK2CK Leveling		OP[6]	0_B: WCK2CK Leveling Mode Disable (default) 1_B: WCK2CK Leveling Mode Enable	
CKR (WCK to CK frequency ratio)		OP[7]	0_B: 4:1 ratio 1_B: 2:1 ratio (default)	1,2,3

NOTE 1 There are three physical registers assigned to each bit of this MR parameter, designated set point 0, set point 1, and set point 2. Only the registers for the set point determined by the state of the FSP-WR bit (MR16 OP[1:0]) will be written to with an MRW command to this MR address.

NOTE 2 There are three physical registers assigned to each bit of this MR parameter, designated set point 0, set point 1, and set point 2. The SDRAM will operate only according to the values stored in the registers for the active set point, i.e., the set point determined by the state of the FSP-OP bit (MR16 OP[3:2]). The values in the registers for the inactive set point will be ignored by the SDRAM, and may be changed without affecting SDRAM operation.

NOTE 3 CKR 2:1 can support up to 3200Mbps.

NOTE 4 The SDRAM will continue to terminate WCK in all states, if termination is enabled by MR18 OP[2:0].

NOTE 5 tWCK2DQ AC parameters can be changed by MR18 OP[3]. Refer to tWCK2DQ AC parameter table. WCK single-ended mode (MR20 OP[3:2]) can be allowed during Low frequency mode only.

6.2.1 Mode Register definition (Cont'd)

Table 98 - MR19 Register Information (MA[7:0] = 13_H)

OP[7]	OP[6]	OP[5]	OP[4]	OP[3]	OP[2]	OP[1]	OP[0]
RFU		WCK2DQ OSC FM support	WCK2DQ OSC FM	DVFSQ		DVFSC	

Table 99 - MR19 Definition

Function	Register Type	Operand	Data	Notes
DVFSC (VDD2 Dynamic Voltage and Frequency Scaling Core)	Write-only	OP[1:0]	00_B: High Speed mode (only VDD2H: 1.05V rail) (default) 01_B: Low speed mode (use VDD2L: 0.9V rail) All others: reserved	1,2
DVFSQ (VDDQ Dynamic Voltage and Frequency Scaling VDDQ)		OP[3:2]	00_B: VDDQ = 0.5V (default) 01_B: VDDQ = 0.3V All others: reserved	1,2,3
WCK2DQ OSC FM		OP[4]	0_B: WCK2DQ oscillator for WCK low frequency mode (default) 1_B: WCK2DQ oscillator for WCK high frequency mode	1,2,4,5
WCK2DQ OSC FM support	Read-Only	OP[5]	0_B: WCK2DQ OSC FM not supported 1_B: WCK2DQ OSC FM supported	

NOTE 1 There are three physical registers assigned to each bit of this MR parameter, designated set point 0, set point 1 and set point 2. Only the registers for the set point determined by the state of the FSP-WR bit (MR16 OP[1:0]) will be written to with an MRW command to this MR address, or read from with an MRR command to this address.

NOTE 2 There are three physical registers assigned to each bit of this MR parameter, designated set point 0, set point 1 and set point 2. The device will operate only according to the values stored in the registers for the active set point, i.e., the set point determined by the state of the FSP-OP bit (MR16 OP[3:2]). The values in the registers for the inactive set point will be ignored by the device, and may be changed without affecting device operation.

NOTE 3 When DVFSQ OP[3:2] is 01_B, DRAM will turn off all ODT DQ, CS, CA, CK and WCK as well as DQ NT-ODT will turn off regardless of MR setting about ODT and NT-ODT.

NOTE 4 In the case of MR19 OP[5]=0_B (LPDDR5 WCK2DQ OSC FM not supported), MR19 OP[4] is "don't care" and WCK2DQ OSC follows MR18 OP[3] WCK Frequency Mode.

NOTE 5 When operating in WCK low frequency mode (MR18 OP[3]=0_B), WCK2DQ oscillator for WCK high frequency mode (MR19 OP[4]=1_B) can be enabled and vice versa.

6.2.1 Mode Register definition (Cont'd)

Table 100 — MR20 Register Information (MA[7:0] = 14_H)

OP[7]	OP[6]	OP[5]	OP[4]	OP[3]	OP[2]	OP[1]	OP[0]
RDC DQ mode	RDC DMI mode	MRWDL	MRWDU	WCK mode		RDQS	

Table 101 — MR20 definition

Function	Register Type	Operand	Data	Notes
RDQS (Read DQS)	Write-only	OP[1:0]	00_B: RDQS_t and RDQS_c disabled 01_B: RDQS_t enabled and RDQS_c disabled (default) 10_B: RDQS_t and RDQS_c enabled 11_B: RDQS_t disabled and RDQS_c enabled	1,2,3, 6,7,9
WCK mode		OP[3:2]	00_B: differential (default) 01_B: single-ended from WCK_t 10_B: single-ended from WCK_c 11_B: reserved	1,2,4, 5,8
MRWDL (Mode Register Write Disable Lower byte)		OP[4]	0_B: Lower Byte MRW is enabled (default) 1_B: Lower Byte MRW is disabled	10
MRWDU (Mode Register Write Disable Upper byte)		OP[5]	0_B: Upper Byte MRW is enabled (default) 1_B: Upper Byte MRW is disabled	10
RDC DMI mode		OP[6]	In Read DQ Calibration, DMI output pattern is controlled as: 0_B: DMI pattern will be decided by MR33/34 (default) 1_B: DMI pattern will be low-fixed	
RDC DQ mode		OP[7]	In Read DQ Calibration, DQ output pattern is controlled by MR33/34 (pattern) and MR31/32 (per-bit control), where, MR31/32 function is defined as: 0_B: MR31/32 decides whether "invert" or not. (default) 1_B: MR31/32 decides whether "low-fix" or not.	

NOTE 1 There are three physical registers assigned to each bit of this MR parameter, designated set point 0, set point 1, and set point 2. Only the registers for the set point determined by the state of the FSP-WR bit (MR16 OP[1:0]) will be written to with an MRW command to this MR address.
NOTE 2 There are three physical registers assigned to each bit of this MR parameter, designated set point 0, set point 1, and set point 2. The device will operate only according to the values stored in the registers for the active set point, i.e., the set point determined by the state of the FSP-OP bit (MR16 OP[3:2]). The values in the registers for the inactive set point will be ignored by the device, and may be changed without affecting device operation.
NOTE 3 WCK clocking generates RDQS_t and RDQS_c.
NOTE 4 When MR20 OP[3:2]= 01_B, WCK_t is used as WCK timing, and WCK_c should be maintained at a valid logic level.
NOTE 5 When MR20 OP[3:2]= 10_B, WCK_c is used as WCK timing, and WCK_t should be maintained at a valid logic level
NOTE 6 When MR20 OP[1:0]= 01_B, RDQS_t is used as RDQS timing, and RDQS_c should be Hi-Z state.
NOTE 7 When MR20 OP[1:0]= 11_B, RDQS_c is used as RDQS timing, and RDQS_t should be Hi-Z state. NOTE 8 When MR20 OP[3:2]= 01_B, WCK_t polarity is the same as WCK_t in MR20 OP[3:2]=00_B, and when MR20 OP[3:2]= 10_B, WCK_c polarity is the same as WCK_c in MR20 OP[3:2]=00_B.
NOTE 9 When MR20 OP[1:0]= 01_B, RDQS_t polarity is the same as RDQS_t in MR20 OP[1:0]=10_B, and when MR20 OP[1:0]= 11_B, RDQS_c polarity is the same as RDQS_c in MR20 OP[1:0]=10_B.
NOTE 10 This MR setting is not valid to a standard X16 die.

6.2.1 Mode Register definition (Cont'd)

Table 102 — MR21 Register Information (MA[7:0] = 15_H)

OP[7]	OP[6]	OP[5]	OP[4]	OP[3]	OP[2]	OP[1]	OP[0]
WXS	WXFE	RDCFE	WDCFE	ODTD-CSFS	WXFS	RDCFS	WDCFS

Table 103 — MR21 Definition

Function	Register Type	Operand	Data	Notes
WDCFS (WRITE Data Copy Function Support)	Read-only	OP[0]	0_B: LPDDR5 WRITE data copy function not supported 1_B: LPDDR5 WRITE data copy function supported	4
RDCFS (READ Data Copy Function Support)		OP[1]	0_B: LPDDR5 READ data copy function not supported 1_B: LPDDR5 READ data copy function supported	4
WXFS (Write X Function Support)		OP[2]	0_B: LPDDR5 Write-X function not supported 1_B: LPDDR5 Write-X function supported	4
ODTD-CSFS (ODTD-CS Function Support)		OP[3]	0_B: LPDDR5 ODTD-CS function not supported 1_B: LPDDR5 ODTD-CS function supported	4
WDCFE (WRITE Data Copy Function Enable)	Write-only	OP[4]	0_B: LPDDR5 WRITE data copy function disable (default) 1_B: LPDDR5 WRITE data copy function enable	1
RDCFE (READ Data Copy Function Enable)		OP[5]	0_B: LPDDR5 READ data copy function disable (default) 1_B: LPDDR5 READ data copy function enable	2
WXFE (Write X Function Enable)		OP[6]	0_B: LPDDR5 write-X function disable (default) 1_B: LPDDR5 write-X function enable	3
WXS (Selection function of data to be written by Write X)	Read-only	OP[7]	0_B: Data to be written is "0" only. 1_B: Data to be written can be selected with "0" and "1 and Byte control"	4

NOTE 1 MR21 OP[4] is "don't care" in case of MR21 OP[0]=0_B (LPDDR5 WRITE data copy function not supported).

NOTE 2 MR21 OP[5] is "don't care" in case of MR21 OP[1]=0_B (LPDDR5 READ data copy function not supported).

NOTE 3 MR21 OP[6] is "don't care" in case of MR21 OP[2]=0_B (LPDDR5 write-X function not supported).

NOTE 4 Data Copy function, Write X and ODTD-CS function are optional. Refer to vendor's data sheet.

6.2.1 Mode Register definition (Cont'd)

Table 104 — MR22 Register Information (MA[7:0] = 16_H)

OP[7]	OP[6]	OP[5]	OP[4]	OP[3]	OP[2]	OP[1]	OP[0]
RECC		WECC		RFU			

Table 105 — MR22 Definition

Function	Register Type	Operand	Data	Notes
WECC (Write link ECC Control)	Write-only	OP[5:4]	00_B: Write link ECC disable (default) 01_B: Write link ECC enable 10_B: Reserved 11_B: Reserved	1,2
RECC (Read link ECC Control)		OP[7:6]	00_B: Read link ECC disable (default) 01_B: Read link ECC enable 10_B: Reserved 11_B: Reserved	1,2
NOTE 1 There are three physical registers assigned to each bit of this MR parameter, designated set point 0, set point 1, and set point 2. Only the registers for the set point determined by the state of the FSP-WR bit (MR16 OP[1:0]) will be written to with an MRW command to this MR address. NOTE 2 Refer to 7.7.7 for LPDDR5 link ECC descriptions.				

Table 106 — MR23 Register Information (MA[5:0] = 17H)

OP[7]	OP[6]	OP[5]	OP[4]	OP[3]	OP[2]	OP[1]	OP[0]
PASR Segment Mask							

Table 107 — MR23 Definition

Function	Register Type	Operand	Data	Notes
PASR Segment Mask	Write Only	[7:0]	0_B: Segment Refresh Enable (default) 1_B: Segment Refresh Disable	1,2

Table 108 — Row Address of Masked Segment for x16 Mode

Segment	OP[n]	Segment Mask	2Gb	3Gb	4Gb	6Gb	8Gb	12Gb	16Gb	24Gb	32Gb
			R12:R10	R13:R11	R13:R11	R14:R12	R14:R12	R15:R13	R15:R13	R16:R14	R16:R14
0	0	xxxxxxx1	000_B								
1	1	xxxxxx1x	001_B								
2	2	xxxxx1xx	010_B								
3	3	xxxx1xxx	011_B								
4	4	xxx1xxxx	100_B								
5	5	xx1xxxxx	101_B								
6	6	x1xxxxxx	110_B	Not Allowed	110_B	Not Allowed	110_B	Not Allowed	110_B	Not Allowed	110_B
7	7	1xxxxxxx	111_B		111_B		111_B		111_B		111_B
NOTE 1 This table indicates the range of row addresses in each masked segment. "X" is don't care for a particular segment. NOTE 2 For 3Gb, 6Gb, 12Gb, and 24Gb densities, OP[7:6] must always be LOW (=00_B).											

Table 109 — Row Address of Masked Segment for x8 Mode

Segment	OP[n]	Segment Mask	2Gb	3Gb	4Gb	6Gb	8Gb	12Gb	16Gb	24Gb	32Gb
			R13:R11	R14:R12	R14:R12	R15:R13	R15:R13	R16:R14	R16:R14	R17:R15	R17:R15
0	0	xxxxxxx1	000_B								
1	1	xxxxxx1x	001_B								
2	2	xxxxx1xx	010_B								
3	3	xxxx1xxx	011_B								
4	4	xxx1xxxx	100_B								
5	5	xx1xxxxx	101_B								
6	6	x1xxxxxx	110_B	Not Allowed	110_B	Not Allowed	110_B	Not Allowed	110_B	Not Allowed	110_B
7	7	1xxxxxxx	111_B		111_B		111_B		111_B		111_B
NOTE 1 This table indicates the range of row addresses in each masked segment. "X" is don't care for a particular segment. NOTE 2 For 3Gb, 6Gb, 12Gb, and 24Gb densities, OP[7:6] must always be LOW (=00_B).											

6.2.1 Mode Register definition (Cont'd)

Table 110 — MR24 Register Information (MA[5:0] = 18H)

OP[7]	OP[6]	OP[5]	OP[4]	OP[3]	OP[2]	OP[1]	OP[0]
DFES	DFE Quantity for Upper Byte (DFEQU)			RFU	DFE Quantity for Lower Byte (DFEQL)		

Table 111 — MR24 Definition

Function	Register Type	Operand	Data	Notes
DFE Quantity for Lower Byte (DFEQL)	Write Only	OP[2:0]	000_B: DFE disabled (default) 001_B: Minimum negative feedback quantity ⋮ 011_B: Maximum negative feedback quantity All Others: Reserved	1,2,3
DFE Quantity for Upper Byte (DFEQU)		OP[6:4]	000_B: DFE disabled (default) 001_B: Minimum negative feedback quantity ⋮ 011_B: Maximum negative feedback quantity All Others: Reserved	1,2,3
DFE support (DFES)	Read Only	OP[7]	0_B: DFE is not supported 1_B: DFE is supported	

NOTE 1 DFE quantity is vender specific. Please refer to each vender specification.

NOTE 2 There are three physical registers assigned to each bit of this MR parameter, designated set point 0, set point 1, and set point 2. Only the registers for the set point determined by the state of the FSP-WR bit (MR16 OP[1:0]) will be written to with an MRW command to this MR address, or read from with an MRR command to this address.

NOTE 3 There are three physical registers assigned to each bit of this MR parameter, designated set point 0, set point 1, and set point 2. The device will operate only according to the values stored in the registers for the active set point, i.e., the set point determined by the state of the FSP-OP bit (MR16 OP[3:2]). The values in the registers for the inactive set point will be ignored by the device, and may be changed without affecting device operation.

6.2.1 Mode Register definition (Cont'd)

Table 112 — MR25 Register Information (MA[7:0] = 19_H)

OP[7]	OP[6]	OP[5]	OP[4]	OP[3]	OP[2]	OP[1]	OP[0]
Optimized Refresh mode	PARC	CA Inputs TERM	CK Pair TERM	RFU			

Table 113 — MR25 Definition

Function	Register Type	Operand	Data	Notes
CK Pair TERM (Other Shared dies' CK ODT Info)	Write-only	OP[4]	0_B: All ranks sharing CK Pair are un-terminated (default) 1_B: One of ranks sharing CK Pair are terminated	1,2
CA Inputs TERM (Other Shared dies' CA ODT Info)		OP[5]	0_B: All ranks sharing CA Inputs are un-terminated (default) 1_B: One of ranks sharing CA Inputs are terminated	1,2
PARC (Partial Array Refresh Control)		OP[6]	0_B: PAAR disable (default) 1_B: PAAR enable	3,4
Optimized Refresh mode		OP[7]	0_B: Optimized Refresh mode disabled 1_B: Optimized Refresh mode enabled (default)	

NOTE 1 MR25 OP[5]/[4] is set to notify CA/CK ODT status of other shared dies.
NOTE 2 When CK and CA ODT status is different from each other (ex. CK termination, CA un-termination) and MR25 OP[5] is disabled, the un-terminated CA input buffer uses the fixed level reference voltage (TBD).
NOTE 3 MR23 PASR Segment Mask is applied to PAAR (Partial Array Auto Refresh) operation if PAAR enabled.
NOTE 4 Refer to 7.5.5 for LPDDR5 PASR descriptions.

Table 114 — MR26 Register Information (MA[7:0] = $1A_H$)

OP[7]	OP[6]	OP[5]	OP[4]	OP[3]	OP[2]	OP[1]	OP[0]
RDQSTFE	RDQSTFS	DCMU1	DCMU0	DCML1	DCML0	DCM Flip	DCM Start/Stop

Table 115 — MR26 definition

Function	Register Type	Operand	Data	Notes
RD/WR-based WCK-RDQS_t Training mode Enable (RDQSTFE)	Write-only	OP[7]	0_B: SDRAM does not support RD/WR-based WCK-RDQS_t Training Disable (Default) 1_B: SDRAM supports RD/WR-based WCK-RDQS_t Training Enable	
RD/WR-baed WCK-RDQS_t Training mode support (RDQSTFS)	Read-only	OP[6]	0_B: SDRAM does not support RD/WR-based WCK-RDQS_t Training mode 1_B: SDRAM supports RD/WR-based WCK-RDQS_t Training mode	
Duty cycle result for upper byte when DCM Flip=1 (DCMU1)	Read-only	OP[5]	0_B: High duty cycle < 50% for upper byte 1_B: High duty cycle ≥ 50% for upper byte	
Duty cycle result for upper byte when DCM Flip=0 (DCMU0)		OP[4]	0_B: High duty cycle < 50% for upper byte 1_B: High duty cycle ≥50% for upper byte	
Duty cycle result for lower byte when DCM Flip=1 (DCML1)		OP[3]	0_B: High duty cycle < 50% for lower byte 1_B: High duty cycle ≥ 50% for lower byte	
Duty cycle result for lower byte when DCM Flip=0 (DCML0)		OP[2]	0_B: High duty cycle < 50% for lower byte 1_B: High duty cycle ≥ 50% for lower byte	
Flip inputs to cancel offset(DCM_Flip)	Write-only	OP[1]	0_B: No flip (default) 1_B: Flip	
DCM_Start/Stop		OP[0]	0_B: Stop (default) 1_B: Start	

6.2.1 Mode Register definition (Cont'd)

Table 116 — MR27 Register Information (MA[7:0] = $1B_H$)

OP[7]	OP[6]	OP[5]	OP[4]	OP[3]	OP[2]	OP[1]	OP[0]
RAAMULT		RAAIMT					RFM

Table 117 — MR27 Definition

Function	Register Type	Operand	Data	Notes
RFM (RFM Required)	Read-only	OP[0]	0_B: RFM not required 1_B: RFM required	1
RAAIMT (Rolling Accumulated ACT Initial Management Threshold)		OP[5:1]	00000_B: Invalid 00001_B: 8 00010_B: 16 ……(step +8) 11110_B: 240 11111_B: 248	1
RAAMULT (Rolling Accumulated ACT Multiplier)		OP[7:6]	00_B: 2X 01_B: 4X 10_B: 6X 11_B: 8X	1, 2

NOTE 1 Vendor programmed, no need to periodical read..
NOTE 2 RAAMMT = RAAMULT * RAAIMT

6.2.1 Mode Register definition (Cont'd)

Table 118 — MR28 Register Information (MA[7:0] = $1C_H$)

OP[7]	OP[6]	OP[5]	OP[4]	OP[3]	OP[2]	OP[1]	OP[0]
RFU		ZQ Mode	RFU	ZQ Interval		ZQ Stop	ZQ Reset

Table 119 — MR28 Definition

Function	Register Type	Operand	Data	Notes
ZQ Reset	Write-only	OP[0]	0_B: Normal Operation (Default) 1_B: ZQ Reset	1,2
ZQ Stop		OP[1]	0_B: Normal Operation (Default) 1_B: Background ZQ Calibration is halted after tZQSTOP	3,4
ZQ Interval		OP[3:2]	00_B: Background Cal Interval ≤32ms 01_B: Background Cal Interval ≤64ms (default) 10_B: Background Cal Interval ≤128ms 11_B: Background Cal Interval ≤256ms	5
ZQ Mode		OP[5]	0_B: Background ZQ Calibration (Default) 1_B: Command-Based ZQ Calibration	5

NOTE 1 See Table 22, ZQCal Timing Parameters for calibration latency and timing.
NOTE 2 Asserting ZQ Reset will set the calibration values to their default setting.
NOTE 3 When ZQ Stop is enabled, the ZQ resource is available for use by other devices. See 4.2.1.2, ZQ Stop Functionality.
NOTE 4 In Command-Based Calibration mode ZQCal Start commands are ignored when MR28 OP[1]=1_B.
NOTE 5 ZQ Interval and ZQ Mode MR settings are only applicable to ZQ Master die. These settings will be ignored by ZQ Slave die

6.2.1 Mode Register definition (Cont'd)

Table 120 — MR29 Register Information (MA[7:0] = 1DH)

OP[7]	OP[6]	OP[5]	OP[4]	OP[3]	OP[2]	OP[1]	OP[0]
PPR Resource Bank 7	PPR Resource Bank 6	PPR Resource Bank 5	PPR Resource Bank 4	PPR Resource Bank 3	PPR Resource Bank 2	PPR Resource Bank 1	PPR Resource Bank 0

Table 121 — MR29 Definition

Function	Register Type	Operand	Data	Notes
PPR Resource Bank 7	Read-only	OP[7]	0B: PPR Resource is not available 1B: PPR Resource is available	1
PPR Resource Bank 6		OP[6]	0B: PPR Resource is not available 1B: PPR Resource is available	1
PPR Resource Bank 5		OP[5]	0B: PPR Resource is not available 1B: PPR Resource is available	1
PPR Resource Bank 4		OP[4]	0B: PPR Resource is not available 1B: PPR Resource is available	1
PPR Resource Bank 3		OP[3]	0B: PPR Resource is not available 1B: PPR Resource is available	1
PPR Resource Bank 2		OP[2]	0B: PPR Resource is not available 1B: PPR Resource is available	1
PPR Resource Bank 1		OP[1]	0B: PPR Resource is not available 1B: PPR Resource is available	1
PPR Resource Bank 0		OP[0]	0B: PPR Resource is not available 1B: PPR Resource is available	1

NOTE 1 PPR Resources describe as follows:

PPR Resource	OP0 [Group 0]				OP1 [Group 1]				OP2 [Group 2]				OP3 [Group 3]			
4BK/4BG	0	1	2	3	0	1	2	3	0	1	2	3	0	1	2	3
16bank	0	1	2	3	4	5	6	7	8	9	10	11	12	13	14	15
8bank	0	1	2	3	4	5	6	7	0	1	2	3	4	5	6	7

6.2.1 Mode Register definition (Cont'd)

Table 122 — MR30 Register Information (MA[5:0] = $1E_H$)

OP[7]	OP[6]	OP[5]	OP[4]	OP[3]	OP[2]	OP[1]	OP[0]
DCA for Upper Byte (DCAU)				DCA for Lower Byte (DCAL)			

Table 123 — MR30 Definition

Function	Register Type	Operand	Data	Notes
DCA for Lower Byte (DCAL)	Write-only	OP[3:0]	0000_B: 0 Steps (default no adjustment) 0001_B: -1 Steps 0010_B: -2 Steps 0011_B: -3 Steps 0100_B: -4 Steps 0101_B: -5 Steps 0110_B: -6 Steps 0111_B: -7 Step 1000_B: RFU 1001_B: +1 Step 1010_B: +2 Steps 1011_B: +3 Steps 1100_B: +4 Steps 1101_B: +5 Steps 1110_B: +6 Steps 1111_B: +7 Steps	1,2,3,4,5
DCA for Upper Byte (DCAU)		OP[7:4]	0000_B: 0 Steps (default no adjustment) 0001_B: -1 Steps 0010_B: -2 Steps 0011_B: -3 Steps 0100_B: -4 Steps 0101_B: -5 Steps 0110_B: -6 Steps 0111_B: -7 Step 1000_B: RFU 1001_B: +1 Step 1010_B: +2 Steps 1011_B: +3 Steps 1100_B: +4 Steps 1101_B: +5 Steps 1110_B: +6 Steps 1111_B: +7 Steps	1,2,3,4,5

NOTE 1 0001_B to 0111_B of bit sets will decrease the internal WCK duty cycle.

NOTE 2 1001_B to 1111_B of bit sets will increase the internal WCK duty cycle.

NOTE 3 There are three physical registers assigned to each bit of this MR parameter, designated set point 0, set point 1, and set point 2. Only the registers for the set point determined by the state of the FSP-WR bit (MR16 OP[1:0]) will be written to with an MRW command to this MR address.

NOTE 4 There are three physical registers assigned to each bit of this MR parameter, designated set point 0, set point 1, and set point 2. The SDRAM will operate only according to the values stored in the registers for the active set point, i.e., the set point determined by the state of the FSP-OP bit (MR16 OP[3:2]). The values in the registers for the inactive set point will be ignored by the SDRAM, and may be changed without affecting SDRAM operation.

NOTE 5. With byte mode device, OP[3:0] applies lower byte device and OP[7:4] applies upper byte device. Unused operands (OP[7:4] for lower byte device and OP[3:0] for upper byte device) should be set 0_B or 1_B by which are ignored SDRAM though.

6.2.1 Mode Register definition (Cont'd)

Table 124 — MR31 Register Information (MA[7:0] = $1F_H$)

OP[7]	OP[6]	OP[5]	OP[4]	OP[3]	OP[2]	OP[1]	OP[0]
Lower-byte per-bit control Register for DQ Calibration							

Table 125 — MR31 Definition

Function	Register Type	Operand	Data	Notes
Lower-byte per-bit control for DQ Calibration	Write-only	OP[7:0]	The following values may be written for any operand OP[7:0], and will be applied to the corresponding DQ locations DQ[7:0] within a byte lane: In DQ inversion mode (MR20[7] = 0), 0_B: Do not invert 1_B: Invert the DQ Calibration patterns in MR33 and MR34 In DQ output fix0 mode (MR20[7] = 1), 0_B: Do not apply low-fix 1_B: Data pattern is low-fixed Default value for OP[7:0]=55_H	1,2,3,4

NOTE 1 This register will invert or apply low-fix for the DQ Calibration pattern found in MR33 and MR34 for any single DQ, or any combination of DQ's.
Example: In case of DQ inversion mode, If MR31 OP[7:0]=00010101_B, then the DQ Calibration patterns transmitted on DQ[7,6,5,3,1] will not be inverted, but the DQ Calibration patterns transmitted on DQ[4,2,0] will be inverted.
In case of DQ output fix0 mode, If MR31 OP[7:0]=00010101_B, then the DQ Calibration patterns transmitted on DQ[7,6,5,3,1] will not be low-fixed, but the DQ Calibration patterns transmitted on DQ[4,2,0] will be low-fixed.

NOTE 2 DMI[0] is not inverted. DMI pattern is decided by MR33/34, where MR20[6] defines whether DMI output low-fix or not.

NOTE 3 No Data Bus Inversion (DBI) function is enacted during DQ Read Calibration, even if DBI is enabled in MR3-OP[7:6].

NOTE 4 In case of byte mode, MR31 is valid only for lower byte selected device.

Table 126 — MR31 Invert Register Pin Mapping

PIN	DQ0	DQ1	DQ2	DQ3	DMI0	DQ4	DQ5	DQ6	DQ7
MR31	OP0	OP1	OP2	OP3	NO-Invert	OP4	OP5	OP6	OP7

6.2.1 Mode Register definition (Cont'd)

Table 127 — MR32 Register Information (MA[7:0] = 20_H)

OP[7]	OP[6]	OP[5]	OP[4]	OP[3]	OP[2]	OP[1]	OP[0]
Upper-byte per-bit control Register for DQ Calibration							

Table 128 — MR32 definition

Function	Register Type	Operand	Data	Notes
Upper-byte per-bit control for DQ Calibration	Write-only	OP[7:0]	The following values may be written for any operand OP[7:0], and will be applied to the corresponding DQ locations DQ[15:8] within a byte lane: In DQ inversion mode (MR20[7] = 0), 0_B: Do not invert 1_B: Invert the DQ Calibration patterns in MR33 and MR34 In DQ output fix0 mode (MR20[7] = 1), 0_B: Do not apply low-fix 1_B: Data pattern is low-fixed Default value for OP[7:0] = 55_H	1,2,3,4

NOTE 1 This register will invert or apply low-fix for the DQ Calibration pattern found in MR33 and MR34 for any single DQ, or any combination of DQ's.
Example: In case of DQ inversion mode, If MR32OP[7:0]=00010101_B, then the DQ Calibration patterns transmitted on DQ[15,14,13,11,9] will not be inverted, but the DQ Calibration patterns transmitted on DQ[12,10,8] will be inverted.
In case of DQ output fix0 mode, If MR31 OP[7:0]=00010101_B, then the DQ Calibration patterns transmitted on DQ[15,14,13,11,9] will not be low-fixed, but the DQ Calibration patterns transmitted on DQ[12,10,8] will be low-fixed.

NOTE 2 DMI[1] is not inverted. DMI pattern is decided by MR33/34, where MR20[6] defines whether DMI output low-fix or not.

NOTE 3 No Data Bus Inversion (DBI) function is enacted during DQ Read Calibration, even if DBI is enabled in MR3-OP[7:6].

NOTE 4 In case of byte mode, MR32 is valid only for upper byte selected device.

Table 129 — MR32 Invert Register Pin Mapping

PIN	DQ8	DQ9	DQ10	DQ11	DMI1	DQ12	DQ13	DQ14	DQ15
MR32	OP0	OP1	OP2	OP3	NO-Invert	OP4	OP5	OP6	OP7

6.2.1 Mode Register definition (Cont'd)

Table 130 — MR33 Register Information (MA[7:0] = 21_H)

OP[7]	OP[6]	OP[5]	OP[4]	OP[3]	OP[2]	OP[1]	OP[0]
DQ Calibration Pattern "A"							

Table 131 — MR33 Definition

Function	Register Type	Operand	Data	Notes
Return DQ Calibration Pattern MR33 + MR34	Write-only	OP[7:0]	X_B: DQ Calibration Pattern A "$5A_H$" (default)	1,2,3,4

NOTE 1 Read DQ Calibration command (RDC) causes the device to return the DQ Calibration Pattern contained in this register followed by the contents of MR34.The pattern contained in MR33 is transmitted on DQ[15:0] and DMI[1:0] when DQ Read Calibration is issued. The pattern is transmitted serially on each data lane, is organized as "big endian" such that the low-order bit in a byte is transmitted first. If the data pattern in MR33 is 27_H , then the first bit transmitted with be a '1', followed by '1', '1', '0', '0', '1', '0', and '0'. The bit stream will be 11100100_B.
A default pattern "$5A_H$"is loaded at power-up or RESET, or the pattern may be overwritten with an MRW to this register. The contents of MR31 and MR32 will invert the data pattern for a given DQ See Table 125, for more information.

NOTE 2 MR31 and MR32 may be used to invert the MR33/MR34 data patterns on the DQ pins. See Table 125 and Table 128 for more information. Data is never inverted on the DMI[1:0] pins.

NOTE 3 The data pattern is not transmitted on the DMI[1:0] pins if DBI-RD is disabled via MR3-OP[6:5].

NOTE 4 No Data Bus Inversion (DBI) function is enacted during DQ Read Calibration, even if DBI is enabled in MR3-OP[6:5].

Table 132 — MR34 Register Information (MA[7:0] = 22_H)

OP[7]	OP[6]	OP[5]	OP[4]	OP[3]	OP[2]	OP[1]	OP[0]
DQ Calibration Pattern "B"							

Table 133 — MR34 Definition

Function	Register Type	Operand	Data	Notes
Return DQ Calibration Pattern MR33 + MR34	Write-only	OP[7:0]	X_B: DQ Calibration Pattern B "$3C_H$" (Default)	1,2,3,4

NOTE 1 Read DQ Calibration command (RDC) causes the device to return the DQ Calibration Pattern contained in MR33 and followed by the contents of this register. The pattern contained in MR34 is concatenated to the end of MR33 and transmitted on DQ[15:0] and DMI[1:0] when DQ Read Calibration is issued. The pattern is transmitted serially on each data lane, organized "big endian" such that the low-order bit in a byte is transmitted first. If the data pattern in MR33 is 27_H, then the first bit transmitted with be a '1', followed by '1', '1', '0', '0', '1', '0', and '0'. The bit stream will be 111100100_B.
A default pattern "$3C_H$" is loaded at power-up or RESET, or the pattern may be overwritten with an MRW to this register. See MR33 for more information.

NOTE 2 MR31 and MR32 may be used to invert the MR33/MR34 data patterns on the DQ pins. See MR31 and MR32 for more information. Data is never inverted on the DMI[1:0] pins.

NOTE 3 The data pattern is not transmitted on the DMI[1:0] pins if DBI-RD is disabled via MR3-OP[6:5].

NOTE 4 No Data Bus Inversion (DBI) function is enacted during DQ Read Calibration, even if DBI is enabled in MR3-OP[6].

6.2.1 Mode Register definition (Cont'd)

Table 134 — MR35 Register Information (MA[7:0] = 23_H)

OP[7]	OP[6]	OP[5]	OP[4]	OP[3]	OP[2]	OP[1]	OP[0]
WCK2DQI Oscillator Count - LSB							

Table 135 — MR35 Definition

Function	Register Type	Operand	Data	Notes
WCK2DQI Oscillator (DQ input Training WCK Oscillator)	Read-only	OP[7:0]	0 - 255 LSB DRAM WCK2DQI Oscillator Count	1,2,3,4

NOTE 1 MR35 reports the LSB bits of the DRAM WCK2DQI Oscillator count. The DRAM WCK2DQI Oscillator count value is used to train WCK to the DQ data valid window. The value reported by the DRAM in this mode register can be used by the memory controller to periodically adjust the phase of WCK relative to DQ.

NOTE 2 Both MR35 and MR36 must be read (MRR) and combined to get the value of the WCK2DQI Oscillator count.

NOTE 3 A new MPC [Start WCK2DQI Oscillator] could be issued to reset the contents of MR35/MR36.

NOTE 4 WCKDQI & WCKDQO cannot be operated simultaneously.

Table 136 — MR36 Register Information (MA[7:0] = 24_H)

OP[7]	OP[6]	OP[5]	OP[4]	OP[3]	OP[2]	OP[1]	OP[0]
WCK2DQI Oscillator Count - MSB							

Table 137 — MR36 Definition

Function	Register Type	Operand	Data	Notes
WCK2DQI Oscillator (DQ input Training WCK Oscillator)	Read-only	OP[7:0]	0 - 255 MSB DRAM WCK2DQI Oscillator Count	1,2,3,4

NOTE 1 MR36 reports the MSB bits of the DRAM WCK2DQI Oscillator count. The DRAM WCK2DQI Oscillator count value is used to train WCK to the DQ data valid window. The value reported by the DRAM in this mode register can be used by the memory controller to periodically adjust the phase of WCK relative to DQ.

NOTE 2 Both MR35 and MR36 must be read (MRR) and combined to get the value of the WCK2DQI Oscillator count.

NOTE 3 A new MPC [Start WCK2DQI Oscillator] could be issued to reset the contents of MR35/MR36.

NOTE 4 WCKDQI & WCKDQO cannot be operated simultaneously.

6.2.1 Mode Register definition (Cont'd)

Table 138 — MR37 Register Information (MA[7:0] = 25_H)

OP[7]	OP[6]	OP[5]	OP[4]	OP[3]	OP[2]	OP[1]	OP[0]
WCK2DQI interval timer run time setting							

Table 139 — MR37 Definition

Function	Register Type	Operand	Data	Notes
WCK2DQI interval timer run time	Write/Read	OP[7:0]	00000000_B: WCK2DQI interval timer stop via MPC Command (Default) 00000001_B: WCK2DQI timer stops automatically at 16th clocks after timer start 00000010_B: WCK2DQI timer stops automatically at 32nd clocks after timer start 00000011_B: WCK2DQI timer stops automatically at 48th clocks after timer start 00000100_B: WCK2DQI timer stops automatically at 64th clocks after timer start ---------- Thru ---------- 00111111_B: WCK2DQI timer stops automatically at (63X16)th clocks after timer start $01XXXXXX_B$: WCK2DQI timer stops automatically at 2048th clocks after timer start $10XXXXXX_B$: WCK2DQI timer stops automatically at 4096th clocks after timer start $11XXXXXX_B$: WCK2DQI timer stops automatically at 8192nd clocks after timer start	1,2

NOTE 1 MPC command with OP[7:0]=10000010_B (Stop WCK2DQI Interval Oscillator) stops WCK2DQI interval timer in case of MR37 OP[7:0] = 00000000_B.

NOTE 2 MPC command with OP[7:0]=10000010_B (Stop WCK2DQI Interval Oscillator) is illegal with non-zero values in MR37 OP[7:0].

6.2.1 Mode Register definition (Cont'd)

Table 140 — MR38 Register Information (MA[7:0] = 26_H)

OP[7]	OP[6]	OP[5]	OP[4]	OP[3]	OP[2]	OP[1]	OP[0]
WCK2DQO Oscillator Count - LSB							

Table 141 — MR38 Definition

Function	Register Type	Operand	Data	Notes
WCK2DQO Oscillator (DQ output Training WCK Oscillator)	Read-only	OP[7:0]	0 - 255 LSB DRAM WCK2DQO Oscillator Count	1,2,3

NOTE 1 MR38 reports the LSB bits of the DRAM WCK2DQO Oscillator count. The DRAM WCK2DQO Oscillator count value is used to train WCK to the DQ data valid window. The value reported by the DRAM in this mode register can be used by the memory controller to periodically adjust the phase of DQ output relative to WCK.

NOTE 2 Both MR38 and MR39 must be read (MRR) and combined to get the value of the WCK2DQO Oscillator count.

NOTE 3 A new MPC [Start WCK2DQO Oscillator] can be issued at any time before sending MPC [Stop WCK2DQO Oscillator]. A new MPC [Start WCK2DQO Oscillator] resets the contents of MR38/MR39.

Table 142 — MR39 Register Information (MA[7:0] = 27_H)

OP[7]	OP[6]	OP[5]	OP[4]	OP[3]	OP[2]	OP[1]	OP[0]
WCK2DQO Oscillator Count - MSB							

Table 143 — MR39 Definition

Function	Register Type	Operand	Data	Notes
WCK2DQO Oscillator (DQ output Training WCK Oscillator)	Read-only	OP[7:0]	0 - 255 MSB DRAM WCK2DQO Oscillator Count	1,2,3

NOTE 1 MR39 reports the MSB bits of the DRAM WCK2DQO Oscillator count. The DRAM WCK2DQO Oscillator count value is used to train WCK to the DQ data valid window. The value reported by the DRAM in this mode register can be used by the memory controller to periodically adjust the phase of DQ output relative to WCK.

NOTE 2 Both MR38 and MR39 must be read (MRR) and combined to get the value of the WCK2DQO Oscillator count.

NOTE 3 A new MPC [Start WCK2DQO Oscillator] can be issued at any time before sending MPC [Stop WCK2DQO Oscillator]. A new MPC [Start WCK2DQO Oscillator] resets the contents of MR38/MR39.

6.2.1 Mode Register definition (Cont'd)

Table 144 — MR40 Register Information (MA[7:0] = 28_H)

OP[7]	OP[6]	OP[5]	OP[4]	OP[3]	OP[2]	OP[1]	OP[0]
WCK2DQO interval timer run time setting							

Table 145 — MR40 Definition

Function	Register Type	Operand	Data	Notes
WCK2DQO interval timer run time	Write/Read	OP[7:0]	00000000_B: WCK2DQO interval timer stop via MPC Command (Default) 00000001_B: WCK2DQO timer stops automatically at 16th clocks after timer start 00000010_B: WCK2DQO timer stops automatically at 32nd clocks after timer start 00000011_B: WCK2DQO timer stops automatically at 48th clocks after timer start 00000100_B: WCK2DQO timer stops automatically at 64th clocks after timer start ---------- Thru ---------- 00111111_B: WCK2DQO timer stops automatically at (63X16)th clocks after timer start $01XXXXXX_B$: WCK2DQO timer stops automatically at 2048th clocks after timer start $10XXXXXX_B$: WCK2DQO timer stops automatically at 4096th clocks after timer start $11XXXXXX_B$: WCK2DQO timer stops automatically at 8192nd clocks after timer start	1, 2

NOTE 1 MPC command with OP[7:0]=10000100_B (Stop WCK2DQO Interval Oscillator) stops WCK2DQO interval timer in case of MR40 OP[7:0] = 00000000_B.

NOTE 2 MPC command with OP[7:0]=10000100_B (Stop WCK2DQO Interval Oscillator) is illegal with non-zero values in MR40 OP[7:0].

6.2.1 Mode Register definition (Cont'd)

Table 146 — MR41 Register Information (MA[7:0] = 29_H)

OP[7]	OP[6]	OP[5]	OP[4]	OP[3]	OP[2]	OP[1]	OP[0]
NT DQ ODT			PPRE	RFU			

Function	Register Type	Operand	Data	Notes
NT DQ ODT (Non-Target DQ Bus Receiver On-Die-Termination)	Write-only	OP[7:5]	000_B: Disable 001_B: RZQ/1 010_B: RZQ/2 011_B: RZQ/3 (default) 100_B: RZQ/4 101_B: RZQ/5 110_B: RZQ/6 111_B: RFU	1,2,3
PPRE		OP[4]	0_B: PPR Disable (default) 1_B: PPR Enable	

NOTE 1 All values are "typical". The actual value after calibration will be within the specified tolerance for a given voltage and temperature. Re-calibration may be required as voltage and temperature vary.

NOTE 2 There are three physical registers assigned to each bit of this MR parameter, designated set point 0, set point 1, and set point 2. Only the registers for the set point determined by the state of the FSP-WR bit (MR16 OP[1:0]) will be written to with an MRW command to this MR address.

NOTE 3 There are three physical registers assigned to each bit of this MR parameter, designated set point 0, set point 1, and set point 2. The device will operate only according to the values stored in the registers for the active set point, i.e., the set point determined by the state of the FSP-OP bit (MR16 OP[3:2]). The values in the registers for the inactive set point will be ignored by the device, and may be changed without affecting device operation.

Table 147 — MR42 Register Information (MA[7:0] = $2A_H$)

OP[7]	OP[6]	OP[5]	OP[4]	OP[3]	OP[2]	OP[1]	OP[0]
PPR Key Protection							

Table 148 — MR42 definition

Function	Register Type	Operand	Data	Notes
PPR Key Protection	Write-only	OP[7:0]	PPR Key Protection code	1,2

NOTE 1 PPR protection code is vendor specific. Please refer vendor data sheet.

NOTE 2 PPR entry and exit sequence details are described in 7.7.4 Post Package Repair.

Table 149 - MR43 Register Information (MA[7:0] = $2B_H$)

OP[7]	OP[6]	OP[5]	OP[4]	OP[3]	OP[2]	OP[1]	OP[0]
DBE_flag	SBEC_Rule	SBE_count					

Table 150 – MR43 definition

Function	Register Type	Operand	Data	Notes
DBE_flag	Read-only	OP[7]	0_B: No double-bit errors have occurred on the DRAM interface 1_B: One or more double-bit errors have occurred on the DRAM interface	1,2,4,6
SBEC_Rule		OP[6]	0_B: Simultaneous SBE on each DQ byte and DMI are counted as one error 1_B: Simultaneous SBE on each DQ byte and DMI are independently counted	3
SBE_count		OP[5:0]	The number of times a single-bit error or errors have occurred on the DRAM interface	1,2,3,4,5

NOTE 1 These bits are cleared on power-up, DRAM reset, any Power-Down Exit, and on each read of this mode register. They are also held in the cleared state whenever MR22 OP[5:4]=00b. Because time is required for the DRAM to perform the clear on reads, the delay after reading this mode register should be tMRR + tMRW (rather than simply tMRR as required on most registers).

NOTE 2 The DRAM should disable detection & recording of ECC errors during Write-FIFO commands, as these are used for training purposes and some errors are expected during training.

NOTE 3 In a x16 DRAM device, up to 4 single-bit errors could potentially be detected in a single BL16 burst (byte 0 data SBE, byte 0 DMI SBE, byte 1 data SBE, and byte 1 DMI SBE).
SBEC_Rule 0_B: Any combination of these 4 simultaneous errors is considered a single SBE occurrence, and would only increment the SBE_count by 1. A BL32 burst can have up to 2 such SBE occurrences, and could increment the SBE_count by up to 2. In a x8 DRAM device, any simultaneous combination of data SBE and DMI SBE is considered a single SBE occurrence, and would only increment the SBE_count by 1 (up to 2 in a BL32 burst).
SBEC_Rule 1_B : Each of the maximum 4 simultaneous errors is considered as an independent error and would increment the SBE count up to 4. A BL32 burst can have up to 8 such SBE occurrences, and could increment the SBE_count by up to 8. In a x8 DRAM device, any simultaneous combination of data SBE and DMI SBE is considered a independent SBE occurrence, and would only increment the SBE_count by up to 2 (up to 4 in a BL32 burst).

NOTE 4 In x16 mode, errors from either interface byte are stored in a single register per DRAM (SBE_count would be the number of SBE occurrences on BOTH bytes & DBE_flag would indicate a DBE on EITHER byte). In x8 mode, errors are stored for a single interface byte and MRR returns both copies of this register, each on its corresponding byte lane.

NOTE 5 SBE_count should be a saturating counter.

NOTE 6 Once set, the DBE_flag bit remains set until explicitly cleared by one of the conditions described in note 1 above.

Table 151 - MR44 Register Information (MA[7:0] = $2C_H$)

OP[7]	OP[6]	OP[5]	OP[4]	OP[3]	OP[2]	OP[1]	OP[0]
Data ECC Syndrome [7:0]							
S[7]	S[6]	S[5]	S[4]	S[3]	S[2]	S[1]	S[0]

Table 152 - MR44 definition

Function	Register Type	Operand	Data	Notes
Data ECC Syndrome [7:0]	Read-only	OP[7:0]	Bits 7:0 of the data ECC syndrome from the most recent single-bit error	1,2,3,4,5,6

NOTE 1 These bits are cleared on power-up, DRAM reset, any Power-Down Exit, and on each read of this mode register. They are also held in the cleared state whenever MR22 OP[5:4]=00_B. Because time is required for the DRAM to perform the clear on reads, the delay after reading this mode register should be tMRR + tMRW (rather than simply tMRR as required on most registers).

NOTE 2 The DRAM should disable detection & recording of ECC errors during Write-FIFO commands, as these are used for training purposes and some errors are expected during training.

NOTE 3 In x16 mode, error syndromes from either interface byte are stored in a single register per DRAM. In x8 mode, error syndromes are stored for a single interface byte and MRR returns both copies of this register, each on its corresponding byte lane.

NOTE 4 In x16 mode, it is possible for errors to occur on both bytes simultaneously. In this rare case, only the syndrome from DQ[7:0] should be stored.

NOTE 5 Regardless of detecting a data ECC error or a DMI ECC error, both syndromes should be stored at either error occurrence.

NOTE 6 The error syndrome is not affected by a DBE and retains its previous value.

Table 153 - MR45 Register Information (MA[7:0] = $2D_H$)

OP[7]	OP[6]	OP[5]	OP[4]	OP[3]	OP[2]	OP[1]	OP[0]
Data ECC Syndrome [8]	Error Byte Lane	DMI ECC Syndrome					
S[8]	Error Byte Lane	DS[5]	DS[4]	DS[3]	DS[2]	DS[1]	DS[0]

Table 154 – MR45 definition

Function	Register Type	Operand	Data	Notes
Data ECC Syndrome[8] (S[8])	Read-only	OP[7]	Bit 8 of the data ECC syndrome from the most recent single-bit error	1,2,3,4,5,7
Error Byte Lane		OP[6]	0_B: The most recent single bit error occurred on DQ[7:0] or DMI0 1_B: The most recent single bit error occurred on DQ[15:8] or DMI1	1,2,3,4,5,6,8
DMI ECC Syndrome (DS[5:0])		OP[5:0]	The DMI ECC syndrome from the most recent single-bit error	1,2,3,4,5,7

NOTE 1 These bits are cleared on power-up, DRAM reset, any Power-Down Exit, and on each read of this mode register. They are also held in the cleared state whenever MR22 OP[5:4]=00b. Because time is required for the DRAM to perform the clear on reads, the delay after reading this mode register should be tMRR + tMRW (rather than simply tMRR as required on most registers).

NOTE 2 The DRAM should disable detection & recording of ECC errors during Write-FIFO commands, as these are used for training purposes and some errors are expected during training.

NOTE 3 In x16 mode, error syndromes from either interface byte are stored in a single register per DRAM. In x8 mode, error syndromes are stored for a single interface byte and MRR returns both copies of this register, each on its corresponding byte lane.

NOTE 4 In x16 mode, it is possible for single-bit errors to occur on both bytes simultaneously. In this rare case, only the error syndromes and error byte lane from byte 0 (DQ[7:0] & DMI0) should be stored.

NOTE 5 Regardless of detecting a data ECC error or a DMI ECC error, **both** syndromes should be stored at either error occurrence.

NOTE 6 In x8 mode, this bit is unused and shall always read back as 0.

NOTE 7 These syndrome fields are not affected by a DBE and retains their previous values.

NOTE 8 The Error Byte Lane is only updated by a SBE.

The following talbe is provided to help clarify when and how each field is updated.

Table 155 - Updating ECC Syndromes and Error Byte Lane

Errors at Byte 0	Error at Byte 1	Syndromes (MR44 and MR45 OP[7] & OP[5:0])	Error Byte Lane (MR45 OP[6])
None	None	No Change	No Change
SBE	None	Byte 0	Byte 0
DBE	None	No Change	No Change
None	SBE	Byte 1	Byte 1
SBE	SBE	Byte 0	Byte 0
DBE	SBE	Byte 1	Byte 1
None	DBE	No Change	No Change
SBE	DBE	Byte 0	Byte 0
DBE	DBE	No Change	No Change

Table 156 — MR46 Register Information (MA[5:0] = $2E_H$)

OP[7]	OP[6]	OP[5]	OP[4]	OP[3]	OP[2]	OP[1]	OP[0]
RFU					FIFO RDQS Training	RDQS Toggle	Enhanced RDQS

Table 157 — MR46 definition

Function	Register Type	Operand	Data	Notes
Enhanced RDQS (Enhanced RDQS training mode)	Write-only	OP[0]	0_B: Disabled (default) 1_B: Enhanced RDQS training mode Enabled	
RDQS Toggle (RDQS toggle mode)		OP[1]	0_B: Disabled (default) 1_B: RDQS toggle mode Enabled	
FIFO RDQS Training (WCK-RDQS_t/Parity Training)		OP[2]	0_B: Disabled (default) 1_B: WCK-RDQS_t/Parity Training Enabled	1
NOTE 1 When MR46 OP[3] = 1_B, Write FIFO command will allow data to be written through the RDQS_t pin. The data written via the RDQS_t pin can then be read back via the DMI by a Read FIFO command.				

6.2.1 Mode Register definition (Cont'd)

Table 158 — MR47 Register Information (MA[7:0] = $2F_H$)

OP[7]	OP[6]	OP[5]	OP[4]	OP[3]	OP[2]	OP[1]	OP[0]
Serial ID-1							

Table 159 — MR47 Definition

Function	Register Type	Operand	Data	Notes
LPDDR5 Serial ID-1	Read Only	OP[7:0]	Serial ID-1	1

NOTE 1 MR47 is vendor specific.

Table 160 — MR48 Register Information (MA[7:0] = 30_H)

OP[7]	OP[6]	OP[5]	OP[4]	OP[3]	OP[2]	OP[1]	OP[0]
Serial ID-2							

Table 161 — MR48 Definition

Function	Register Type	Operand	Data	Notes
LPDDR5 Serial ID-2	Read Only	OP[7:0]	Serial ID-2	1

NOTE 1 MR48 is vendor specific.

Table 162 — MR49 Register Information (MA[7:0] = 31_H)

OP[7]	OP[6]	OP[5]	OP[4]	OP[3]	OP[2]	OP[1]	OP[0]
Serial ID-3							

Table 163 — MR49 Definition

Function	Register Type	Operand	Data	Notes
LPDDR5 Serial ID-3	Read Only	OP[7:0]	Serial ID-3	1

NOTE 1 MR49 is vendor specific

Table 164 — MR50 Register Information (MA[7:0] = 32_H)

OP[7]	OP[6]	OP[5]	OP[4]	OP[3]	OP[2]	OP[1]	OP[0]
Serial ID-4							

Table 165 — MR50 Definition

Function	Register Type	Operand	Data	Notes
LPDDR5 Serial ID-4	Read Only	OP[7:0]	Serial ID-4	1

NOTE 1 MR50 is vendor specific.

Table 166 — MR51 Register Information (MA[7:0] = 33_H)

OP[7]	OP[6]	OP[5]	OP[4]	OP[3]	OP[2]	OP[1]	OP[0]
Serial ID-5							

Table 167 — MR51 Definition

Function	Register Type	Operand	Data	Notes
LPDDR5 Serial ID-5	Read Only	OP[7:0]	Serial ID-5	1

NOTE 1 MR51 is vendor specific.

6.2.1 Mode Register definition (Cont'd)

Table 168 — MR52 Register Information (MA[7:0] = 34_H)

OP[7]	OP[6]	OP[5]	OP[4]	OP[3]	OP[2]	OP[1]	OP[0]
Serial ID-6							

Table 169 — MR52 Definition

Function	Register Type	Operand	Data	Notes
LPDDR5 Serial ID-6	Read Only	OP[7:0]	Serial ID-6	1

NOTE 1 MR52 is vendor specific.

Table 170 — MR53 Register Information (MA[7:0] = 35_H)

OP[7]	OP[6]	OP[5]	OP[4]	OP[3]	OP[2]	OP[1]	OP[0]
Serial ID-7							

Table 171 — MR53 Definition

Function	Register Type	Operand	Data	Notes
LPDDR5 Serial ID-7	Read Only	OP[7:0]	Serial ID-7	1

NOTE 1 MR53 is vendor specific.

Table 172 — MR54 Register Information (MA[7:0] = 36_H)

OP[7]	OP[6]	OP[5]	OP[4]	OP[3]	OP[2]	OP[1]	OP[0]
Serial ID-8							

Table 173 — MR54 Definition

Function	Register Type	Operand	Data	Notes
LPDDR5 Serial ID-8	Read Only	OP[7:0]	Serial ID-8	1

NOTE 1 MR54 is vendor specific.

Table 174 - MR56 Register Information (MA[7:0] = 38_H)

OP[7]	OP[6]	OP[5]	OP[4]	OP[3]	OP[2]	OP[1]	OP[0]
Valid 0 or 1							

Table 175 - MR56 Definition

Function	Register Type	Operand	Data	Notes
SDRAM will ignore	Write Only	OP[7:0]	Don't Care	1

NOTE 1 This register is reserved for testing purpose. The logical data values written to OP[7:0] shall have no effect on SDRAM operation, however timings need to be observed as for any other MR access command.

Table 176 - MR60 Register Information (MA[7:0] = $3C_H$)

OP[7]	OP[6]	OP[5]	OP[4]	OP[3]	OP[2]	OP[1]	OP[0]
Valid 0 or 1							

Table 177 - MR60 Definition

Function	Register Type	Operand	Data	Notes
SDRAM will ignore	Write Only	OP[7:0]	Don't Care	1

NOTE 1 This register is reserved for testing purpose. The logical data values written to OP[7:0] shall have no effect on SDRAM operation, however timings need to be observed as for any other MR access command.

7 Operating

7.1 Truth Table

Operation or timing that is not specified is illegal, and after such an event, in order to guarantee proper operation, the LPDDR5 device must be reset or power-cycled and then restarted through the specified initialization sequence before normal operation can continue.

7.1.1 Command Truth Table

Table 178 — Command Truth Table

SDRAM COMMAND	BK ORG (BG, 16B, 8B)	SDR CMD PIN	DDR COMMAND PINS							CK_t edge	Notes
		CS	CA0	CA1	CA2	CA3	CA4	CA5	CA6		
DESELECT (DES)	Any	L	X	X	X	X	X	X	X	R1	1, 2
		X	X	X	X	X	X	X	X	F1	
NO OPERATION (NOP)	Any	H	L	L	L	L	L	L	L	R1	1, 2
		X	X	X	X	X	X	X	X	F1	
POWER DOWN ENTRY (PDE)	Any	H	L	L	L	L	L	L	H	R1	1, 2, 12
		L	X	X	X	X	X	X	X	R2	
ACTIVATE-1 (ACT-1)	Any	H	H	H	H	R14	R15	R16	R17	R1	1, 2, 3, 4
	BG	X	BA0	BA1	BG0	BG1	R11	R12	R13	F1	
	16B		BA0	BA1	BA2	BA3					
	8B		BA0	BA1	BA2	V					
ACTIVATE-2 (ACT-2)	Any	H	H	H	L	R7	R8	R9	R10	R1	1, 2, 4
		X	R0	R1	R2	R3	R4	R5	R6	F1	
PRECHARGE (PRE) (Per Bank, All Banks)	Any	H	L	L	L	H	H	H	H	R1	1, 2, 3, 5
	BG	X	BA0	BA1	BG0	BG1	V	V	AB	F1	
	16B		BA0	BA1	BA2	BA3					
	8B		BA0	BA1	BA2	V					
REFRESH (REF) (Per Bank, All Banks)	Any	H	L	L	L	H	H	H	L	R1	1, 2, 3, 5, 14
	BG	X	BA0	BA1	BG0	RFM	SB0	V	AB	F1	
	16B		BA0	BA1	BA2		SB0	V			
	8B		BA0	BA1	BA2		V	SB1			
MASK WRITE (MWR)	Any	H	L	H	L	C0	C3	C4	C5	R1	1, 2, 3, 6, 7
	BG	X	BA0	BA1	BG0	BG1	C1	C2	AP	F1	
	16B		BA0	BA1	BA2	BA3					
	8B		BA0	BA1	BA2	V					
WRITE (WR16 or WR)	Any	H	L	H	H	C0	C3	C4	C5	R1	1, 2, 3, 6, 7, 8
	BG	X	BA0	BA1	BG0	BG1	C1	C2	AP	F1	
	16B		BA0	BA1	BA2	BA3					
	8B		BA0	BA1	BA2	V					
WRITE32 (WR32)	BG/16B	H	L	L	H	L	C3	C4	C5	R1	1, 2, 3, 6, 7, 8
	BG	X	BA0	BA1	BG0	BG1	C1	C2	AP	F1	
	16B		BA0	BA1	BA2	BA3					
READ (RD16 or RD)	Any	H	H	L	L	C0	C3	C4	C5	R1	1, 2, 3, 6, 7, 10, 11
	BG	X	BA0	BA1	BG0	BG1	C1	C2	AP	F1	
	16B		BA0	BA1	BA2	BA3					
	8B		BA0	BA1	BA2	B4					
READ32 (RD32)	BG/16B	H	H	L	H	C0	C3	C4	C5	R1	1, 2, 3, 6, 7, 10, 11
	BG	X	BA0	BA1	BG0	BG1	C1	C2	AP	F1	
	16B		BA0	BA1	BA2	BA3					

Table 154 — Command Truth Table (cont'd)

SDRAM COMMAND	BK ORG (BG, 16B, 8B)	SDR CMD PIN	DDR COMMAND PINS							CK_t edge	Notes
		CS	CA0	CA1	CA2	CA3	CA4	CA5	CA6		
CAS	Any	H	L	L	H	H	WS_WR	WS_RD	WS_FS	R1	1, 2, 7, 13
		X	DC0	DC1	DC2	DC3	WRX	WXSA	WXSB/ B3	F1	
MULTI PURPOSE COMMAND (MPC)	Any	H	L	L	L	L	H	H	OP7	R1	1, 2
		X	OP0	OP1	OP2	OP3	OP4	OP5	OP6	F1	
SELF REFRESH ENTRY (SRE)	Any	H	L	L	L	H	L	H	H	R1	1, 2, 9
		X	V	V	V	V	V	DSM	PD	F1	
SELF REFRESH EXIT (SRX)	Any	H	L	L	L	H	L	H	L	R1	1, 2
		X	V	V	V	V	V	V	V	F1	
MODE REGISTER WRITE-1 (MRW-1)	Any	H	L	L	L	H	H	L	H	R1	1, 2
		X	MA0	MA1	MA2	MA3	MA4	MA5	MA6	F1	
MODE REGISTER WRITE-2 (MRW-2)	Any	H	L	L	L	H	L	L	OP7	R1	1, 2
		X	OP0	OP1	OP2	OP3	OP4	OP5	OP6	F1	
MODE REGISTER READ (MRR)	Any	H	L	L	L	H	H	L	L	R1	1, 2
		X	MA0	MA1	MA2	MA3	MA4	MA5	MA6	F1	
WRITE FIFO (WFF)	Any	H	L	L	L	L	L	H	H	R1	1, 2
		X	L	L	L	L	L	L	L	F1	
READ FIFO (RFF)	Any	H	L	L	L	L	L	H	L	R1	1, 2
		X	L	L	L	L	L	L	L	F1	
READ DQ CALIBRATION (RDC)	Any	H	L	L	L	L	H	L	H	R1	1, 2
		X	L	L	L	L	L	L	L	F1	

NOTE 1 LPDDR5 commands are one clock cycles long and defined by the states of CS at the rising edge (R1) of clock and CA[6:0] at the rising edge (R1) and the falling edge (F1) of clock. Note that some operations such as ACTIVATE, MODE REGISTER WRITE or WCK2CK SYNC (WS_RD, WS_WR, WS_FS) require two commands to initiate.

NOTE 2 "V" means "H" or "L" (a defined logic level). "X" means don't care in which case CK_t, CK_c and CA[6:0] can be floated.

NOTE 3 Bank Group Address BG[1:0] and Bank Address BA[1:0] determine which bank is to be operated upon.

NOTE 4 An ACTIVATE-1 command must be followed by an ACTIVATE-2 command. Only CAS, WRITE, MASK WRITE, READ, PRECHARGE (to a different bank) commands can be issued between ACTIVATE-1 and ACTIVATE-2 commands. The maximum timing gap between ACTIVATE-1 and ACTIVATE-2 commands are 8 clock cycles. An ACTIVATE-1 command must be issued first before issuing an ACTIVATE-2 command. Once an ACTIVATE-1 command is issued, an ACTIVATE-2 command must be issued before issuing another ACTIVATE-1 command.

NOTE 5 AB "HIGH" during PRECHARGE or REFRESH command indicates that command must be applied to all banks and bank address is a don't care.

NOTE 6 AP "HIGH" during WRITE, MASK WRITE or READ commands indicates that an auto-precharge will occur to the bank associated with the WRITE, MASK WRITE or READ command.

NOTE 7 CAS command is only required for WRITE, MASK WRITE or READ operation if optional low power features (DC0-3 or WRX/WXSA/WXSB) of these commands are required or if Burst Start Address (B3) is non-zero to READ or if WCK2CK SYNC (WS_RD, WS_WR) or FAST SYNC (WS_FS) is applied to a target device. CAS operands (DC0-3, WRX/WXSA/WXSB and B3) are valid to immediately following WRITE or READ only. In case of CAS-FAST_SYNC(WS_FS="H" AND WS_WR="L" AND WS_RD="L") or CAS-SYNC_OFF (WS_FS="H" AND WS_WR="H" AND WS_RD="H"), other CAS operands (DC0-3, WRX, WXSA, WXSB, B3) shall be "LOW". Valid DC0-3 or WRX/WXSA/WXSB operand(s) may be issued together with WCK2CK SYNC (WS_WR="H", WS_RD="L", WS_FS="L"). Valid B3 operand may be issued together with WCK2CK SYNC (WS_RD="H", WS_WR="L", WS_FS="L"). Refer to Table 179.

NOTE 8 WRITE32 (WRITE with BL32) command is valid in a BG/16B mode only. WRITE command is WR in an 8B mode and WR16 in a BG/16B mode.

NOTE 9 PD "HIGH" during SELF REFRESH ENTRY command indicates that both Self Refresh Entry and Power Down Entry will occur together. DSM "HIGH" during SELF REFRESH ENTRY command indicates that both Self Refresh Entry and Deep Sleep Mode Entry will occur together. Both PD "HIGH" and DSM "HIGH" are illegal.

NOTE 10 READ command includes Read Burst Start Address (B3, B4) associated with Burst Length setting, B3 for BL16 in a BG/16B mode, or B3, C0 for BL32 in a BG/16B mode, or B3, B4 for BL32 in an 8B mode. Refer to MR1 Burst Sequence Table.

NOTE 11 READ32 (READ with BL32) command is valid in a BG/16B mode only. READ command is RD in an 8B mode and RD16 in a BG/16B mode.

NOTE 12 CS shall be compliant to Power Down Entry/Exit timing requirements. Refer to Power Down Function and Timing Description.

NOTE 13 Refer to LPDDR5 low power function description, Data Copy function (DC0-DC3) and Write X function (WRX, WXSA, WXSB).

NOTE 14 Refer to LPDDR Refresh Management function description about RFM, SB0 and SB1 operands.

Table 179 — Allowable CAS command operand(s) combination

Operation Mode		CAS Command Operand(s)					
	WS_WR	WS_RD	WS_FS	DC0-3	WRX	WXSA	WXSB/B3
WCK2CK SYNC (WR)	H	L	L	LLLL	L	L	L
WCK2CK SYNC (WR) + Write Data Copy	H	L	L	VVVV	L	L	L
WCK2CK SYNC (WR) + Write X	H	L	L	LLLL	H	V	V
WCK2CK SYNC (RD)	L	H	L	LLLL	L	L	V
WCK2CK FAST SYNC	L	L	H	LLLL	L	L	L
WCK2CK SYNC OFF	H	H	H	LLLL	L	L	L
Write Data Copy	L	L	L	VVVV	L	L	L
Write X	L	L	L	LLLL	H	V	V
Non-Zero Burst Start Address for RD	L	L	L	LLLL	L	L	H
WCK SUSPEND	H	L	H	LLLL	L	L	L
Illegal		Other Operands Combination					

NOTE 1 "V" means "H" or "L" (a defined logic level).
NOTE 2 All CAS command operands are non-sticky.
NOTE 3 Write Data Copy function requires DC0-3 operands not to be all-zero.
NOTE 4 CAS-WCK_SUSPEND command is valid only when MR0 OP[2]=1_B (Enhanced WCK Always On mode supported) and MR18 OP[4]= 1_B (WCK Always On mode enabled

7.2 WCK Operation

7.2.1 WCK2CK Synchronization operation

7.2.1.1 WCK2CK Synchronization

An LPDDR5 SDRAM utilizes two types of clock with different frequencies. The frequency of WCK is four times or twice higher than the command clock, requiring an LPDDR5 SDRAM to have clock divider in the WCK clock tree. By dividing the WCK, the operation speed of DRAM internal circuits in WCK domain is reduced to half. However, the WCK divider initial state is unpredictable and results in two different states in an LPDDR5 SDRAM: aligned with CK state and miss-aligned with CK state. **Figure 63** illustrates these two cases.

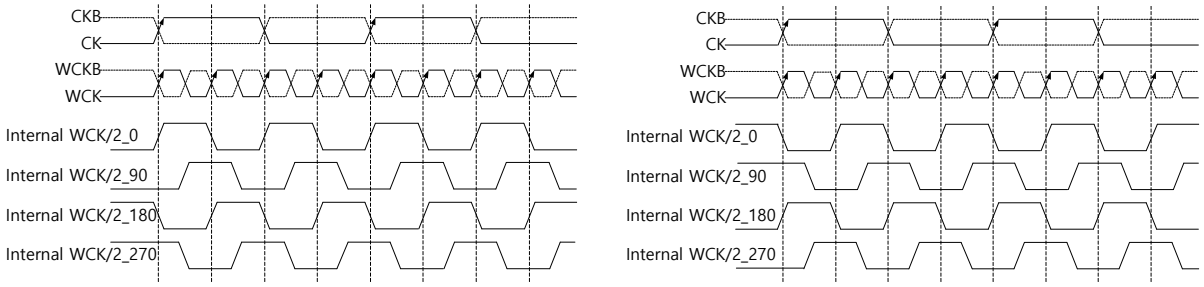

Figure 63 — Aligned WCK/2_0 to CK (Left) & Miss-Aligned WCK/2_0 to CK (Right)

The latency control unit inside the SDRAM performs clock domain change of WRITE or READ commands from CK domain to WCK domain. For error-free latency control, the latency control circuit must know whether the SDRAM is in aligned with CK state or miss-aligned with CK state. An LPDDR5 SDRAM is able to reset or detect its state by a process called WCK2CK Synchronization. When a SDRAM controller issues CAS command with the bit of WCK2CK Synchronization, the controller provides the SDRAM with half frequency WCK pulse to relax ISI and the timing margin. This operation is defined as WCK2CK Synchronization. At the timing when the SDRAM performs WCK2CK Sync operation, the SDRAM controller must provide the SDRAM with half frequency WCK pulse to relax WCK2CK Sync timing margin.

7.2.1.2 CAS Command with WCK2CK Synchronization Bits

The LPDDR5 WCK2CK Synchronization process is initiated by a CAS command with the related bit enabled. The CAS command with WCK2CK Synchronization should be issued before the write or READ command. Table 180 shows the CAS command with WCK2CK Synchronization bit (WS_WR, WS_RD, WS_FAST). CAS command with “1” at WCK2CK Synchronization flag bit informs DRAM WCK2CK Synchronization is required.

Table 180 — CAS command with WCK2CK Synchronization bits

Command	SDR Command Pin	DDR Command Pins							
	CS	CA0	CA1	CA2	CA3	CA4	CA5	CA6	CK_t edge
CAS	H	L	L	H	H	WS_WR	WS_RD	WS_FS	R1
	X	DC0	DC1	DC2	DC3	WRX	V	B3	F1

7.2.1.2 CAS Command with WCK2CK Synchronization Bits (Cont'd)

Figure 64 shows the LPDDR5 WCK2CK Sync operation by CAS command with WCK2CK Sync operand enabled (WS_WR or WS_RD or WS_FAST =1). DRAM controller must start to drive WCK as WCK_t/WCK_c=L/H after tWCKENL. The WCK2CK Sync operation occurs after tWCKENL+tWCKPRE_static followed by half-rate WCK during 1tCK. Before the WCK2CK Sync, WCK must toggle once to reduce the channel ISI in WCK. WCK2CK Training must be performed prior to WCK2CK Synchronization. The DRAM requires the proper WCK toggle pattern prior to insure WCK2CK sync properly. After the WCK2CK Sync is completed, the WCK must continue to toggle until the end of the read or write bursts are completed.

CAS(WS_WR=1) should be followed by WRITE command immediately. CAS(WS_RD=1) should also be followed by READ command immediately. CAS(WS_FAST=1) is only used as a standalone command and can be simultaneously issued to multi-ranks. Refer to 8.1.2, CAS command timing constraints. After Synchronization, the DRAM controller must keep WCK toggling until DQ bursts of READ or WRITE are completed or CAS(WCK Buffer off) command is issued. For Example, After PDX(Power Down Exit), CAS command with WCK2CK Sync operand enabled (WS_WR or WS_RD or WS_FAST=1) must be issued before the WRITE command or READ command. Because during Power Down, WCK2CK sync state is lost.

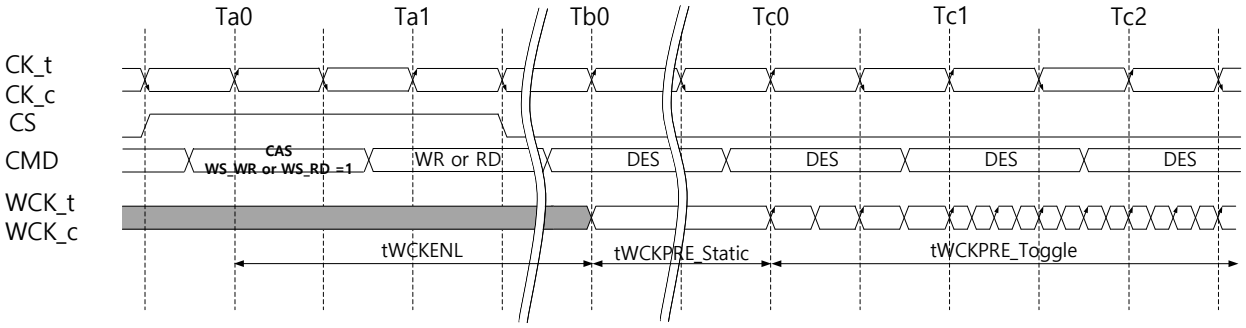

Figure 64 — LPDDR5 WCK2CK Sync operation by CAS command with WCK2CK Sync operand enabled

7.2.1.3 WCK2CK Sync operation followed by a WRITE command

When there is no on-going DQ burst, the DRAM controller turns off WCK drivers to enter Hi-Z state to remove current through WCK ODT (on-die termination) and an LPDDR5 SDRAM also turns off its WCK buffers. Turning off DRAM controller WCK driver or DRAM WCK buffer puts the LPDDR5 DRAM WCK divider into an unknown state, requiring a new WCK2CK Sync sequence before starting DQ operation (or WCK operation for READ/ WRITE/ Training). Therefore, the DRAM controller must track the WCK2CK Sync state of each DRAM, and issue CAS WCK2CK Sync command according to the WCK2CK Sync state before requesting DQ operation (or WCK operation) for READ/ WRITE/ Training operation.

A WCK2CK Sync immediately followed by WRITE operation is shown in Figure 65. The CAS WCK2CK Sync command will have WS_WR=1 when it is followed by WRITE command. No command is allowed between CAS(WS_WR=1) command and WRITE command, and CAS(WS_WR=1) command should be immediately followed by WRITE command. tWCKENL_WR is the delay required by an LPDDR5 DRAM to prepare for WCK2CK Sync operation after the CAS command with WS_WR=1.

7.2.1.3 WCK2CK Sync operation followed by a WRITE command (Cont'd)

At Td0 in Figure 65, tWCKENL_WR+tWCKPRE_Static+tWCKPRE_Toggle_WR from the WCK2CK Sync is satisfied and the memory controller starts the WRITE DQ burst. The WRITE DQ burst is completed and after tWCKPST, the memory controller may stop WCK toggle and put the WCK drivers into hi-Z state and WCK buffers can be also turned off for power saving.

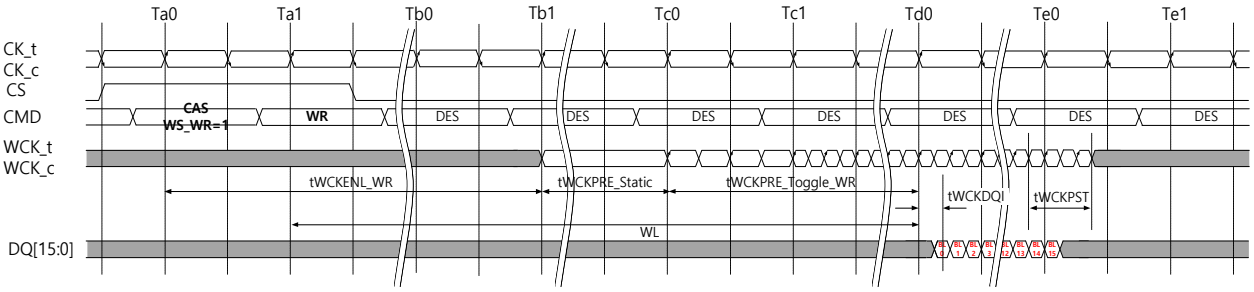

Figure 65 — WCK2CK Sync operation followed by a WRITE command

Table 181 — WCK2CK Sync AC Parameters for WRITE operation

WCK:CK Ratio	Data Rate [Mbps]		CK Frequency [Mbps]		WL(SetA) [nCK]	WL(SetB) [nCK]	tWCKENL_WR(SetA) [nCK]	tWCKENL_WR(SetB) [nCK]	tWCKPRE_Static [nCK]	tWCKPRE toggle_WR [nCK]	tWCKPRE total_WR [nCK]
	Lower Limit(>)	Upper Limit(≤)	Lower Limit(>)	Upper Limit(≤)							
2:1	40	533	10	133	4	4	1	1	1	3	4
	533	1067	133	267	4	6	0	2	2	3	5
	1067	1600	267	400	6	8	1	3	2	4	6
	1600	2133	400	533	8	10	2	4	3	4	7
	2133	2750	533	688	8	14	1	7	4	4	8
	2750	3200	688	800	10	16	3	9	4	4	8
4:1	40	533	5	67	2	2	0	0	1	2	3
	533	1067	67	133	2	3	0	1	1	2	3
	1067	1600	133	200	3	4	1	2	1	2	3
	1600	2133	200	267	4	5	1	2	2	2	4
	2133	2750	267	344	4	7	1	4	2	2	4
	2750	3200	344	400	5	8	2	5	2	2	4
	3200	3733	400	467	6	9	2	5	3	2	5
	3733	4267	467	533	6	11	2	7	3	2	5
	4267	4800	533	600	7	12	3	8	3	2	5
	4800	5500	600	688	8	14	3	9	4	2	6
	5500	6000	688	750	9	15	4	10	4	2	6
	6000	6400	750	800	9	16	4	11	4	2	6

NOTE 1 tWCKENL_WR = WL + 1 - tWCKPRE_total_WR
NOTE 2 tWCKPRE_total_WR = tWCKPRE_toggle_WR + tWCKPRE_Static

7.2.1.4 WCK2CK Sync operation followed by a READ command

Figure 66 illustrates the WCK2CK Sync operation followed by a READ command. The CAS WCK2CK Sync command must have WS_RD=1 when it is followed by READ command. No command is allowed between CAS(WS_RD=1) command and READ command, and CAS(WS_RD=1) command should be immediately followed by READ command. tWCKENL_RD is the optimal delay which guarantee WCK2CK sync operation and minimize WCK toggling power.

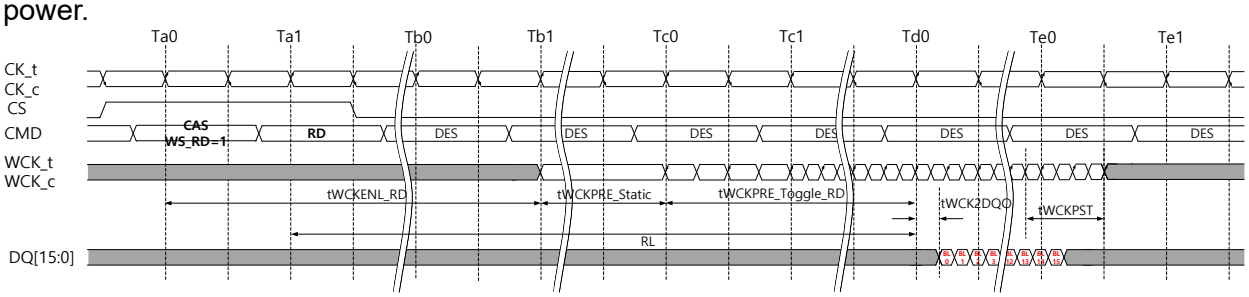

Figure 66 — WCK2CK Sync operation followed by a READ command

7.2.1.4 WCK2CK Sync operation followed by a READ command (Cont'd)

Table 182 — WCK2CK Sync AC Parameters for Read operation

DVFSC disabled (MR19 OP[1:0] = 00_B), Read Link ECC off (MR22 OP[7:6]=00_B)

WCK:CK ratio	Data Rate Range [Mbps]		CK Frequency Range [MHz]		WCK2CK Sync READ AC Parameters [nCK]								
	Lower Limit (>)	Upper Limit (≤)	Lower Limit (>)	Upper Limit (≤)	READ Latency			tWCKENL_RD			tWCKPRE_static	tWCKPRE_toggle_RD	tWCKPRE_total_RD
					Set 0	Set 1	Set 2	Set 0	Set 1	Set 2			
2:1	40	533	10	133	6	6	6	0	0	0	1	6	7
	533	1067	133	267	8	8	8	0	0	0	2	7	9
	1067	1600	267	400	10	10	12	1	1	3	2	8	10
	1600	2133	400	533	12	14	14	2	4	4	3	8	11
	2133	2750	533	688	16	16	18	3	3	5	4	10	14
	2750	3200	688	800	18	20	20	5	7	7	4	10	14
4:1	40	533	5	67	3	3	3	0	0	0	1	3	4
	533	1067	67	133	4	4	4	0	0	0	1	4	5
	1067	1600	133	200	5	5	6	1	1	2	1	4	5
	1600	2133	200	267	6	7	7	1	2	2	2	4	6
	2133	2750	267	344	8	8	9	2	2	3	2	5	7
	2750	3200	344	400	9	10	10	3	4	4	2	5	7
	3200	3733	400	467	10	11	12	3	4	5	3	5	8
	3733	4267	467	533	12	13	14	4	5	6	3	6	9
	4267	4800	533	600	13	14	15	5	6	7	3	6	9
	4800	5500	600	688	15	16	17	6	7	8	4	6	10
	5500	6000	688	750	16	17	19	6	7	9	4	7	11
	6000	6400	750	800	17	18	20	7	8	10	4	7	11

NOTE 1 tWCKENL_RD = RL + 1 - tWCKPRE_total_RD

NOTE 2 tWCKPRE_total_RD = tWCKPRE_toggle_RD + tWCKPRE_Static

NOTE 3 The LPDDR5 SDRAM device should not be operated at a frequency above the upper frequency limit, or below the lower frequency limit, shown for each RL value.

NOTE 4 Some operating features can affect Read Latency:

Feature	Description
1	Byte Mode
2	Read DBI and/or Read Data Copy

NOTE 5 RL Set 0 applies when no features are enabled.
RL Set 1 applies when one feature is enabled (1 or 2).
RL Set 2 applies when two features are enabled.

7.2.1.4 WCK2CK Sync operation followed by a READ command (Cont'd)

Table 183 — WCK2CK Sync AC Parameters for Read operation

DVFSC enabled (MR19 OP[1:0] = 01_B), Read Link ECC disable (MR22 OP[7:6]=00_B)

WCK:CK ratio	Data Rate Range [Mbps]		CK Frequency Range [MHz]		WCK2CK Sync READ AC Parameters [nCK]								
					READ Latency			tWCKENL_RD			tWCKPRE_static	tWCKPRE_toggle_RD	tWCKPRE_total_RD
	Lower Limit (>)	Upper Limit (≤)	Lower Limit (>)	Upper Limit (≤)	Set 0	Set 1	Set 2	Set 0	Set 1	Set 2			
2:1	40	533	10	133	6	6	6	0	0	0	1	6	7
	533	1067	133	267	8	10	10	0	2	2	2	7	9
	1067	1600	267	400	12	12	14	3	3	5	2	8	10
4:1	40	533	5	67	3	3	3	0	0	0	1	3	4
	533	1067	67	133	4	5	5	0	1	1	1	4	5
	1067	1600	133	200	6	6	7	2	2	3	1	4	5

NOTE 1 tWCKENL_RD = RL + 1 - tWCKPRE_total_RD
NOTE 2 tWCKPRE_total_RD = tWCKPRE_toggle_RD + tWCKPRE_Static
NOTE 3 The LPDDR5 SDRAM device should not be operated at a frequency above the upper frequency limit, or below the lower frequency limit, shown for each RL value.
NOTE 4 Some operating features can affect Read Latency:

Feature	Description
1	Byte Mode
2	Read DBI and/or Read Data Copy

NOTE 5 RL Set 0 applies when no features are enabled.
RL Set 1 applies when one feature is enabled (1 or 2).
RL Set 2 applies when two features are enabled.

Table 184 — WCK2CK Sync AC Parameters for Read operation

DVFSC disabled (MR19 OP[1:0] = 00_B), Read Link ECC enable (MR22 OP[7:6]=01_B)

WCK:CK ratio	Data Rate Range [Mbps]		CK Frequency Range [MHz]		WCK2CK Sync READ AC Parameters [nCK]						
					READ Latency		tWCKENL_RD		tWCKPRE_static	tWCKPRE_toggle_RD	tWCKPRE_total_RD
	Lower Limit (>)	Upper Limit (≤)	Lower Limit (>)	Upper Limit (≤)	Set 0	Set 1	Set 0	Set 1			
4:1	3200	3733	400	467	12	13	5	6	3	5	8
	3733	4267	467	533	13	14	5	6	3	6	9
	4267	4800	533	600	15	16	7	8	3	6	9
	4800	5500	600	688	17	18	8	9	4	6	10
	5500	6000	688	750	18	20	8	10	4	7	11
	6000	6400	750	800	19	21	9	11	4	7	11

NOTE 1 tWCKENL_RD = RL + 1 - tWCKPRE_total_RD
NOTE 2 tWCKPRE_total_RD = tWCKPRE_toggle_RD + tWCKPRE_Static
NOTE 3 The LPDDR5 SDRAM device should not be operated at a frequency above the upper frequency limit, or below the lower frequency limit, shown for each RL, or nRBTP value.
NOTE 4 RL Set 1 applies when the device is byte-mode.

7.2.1.5 WCK2CK Sync operation with CAS(WS_FAST=1)

The WCK2CK Sync operation is performed with minimum latency, tWCKENL_FAST, when a CAS command with WS_FAST=1 is issued to an LPDDR5 SDRAM. By this way, the LPDDR5 SDRAM controller can put LPDDR5 SDRAM into WCK2CK Synchronized state as early as possible. CAS(WS_FS=1) is used as a standalone command unlike CAS(WS_RD/WR) and can be issued to not only one rank but also multi-ranks simultaneously. tWCKPRE_toggle_FS can be varied by the command timing gap between CAS(WS_FS=1) and following READ or WRITE commands, whereas tWCKPRE_toggle_WR and tWCKPRE_toggle_RD are exact fixed number in nCK unit.
After CAS (WS_FSAT=1) command is issued, not only READ/ WRITE commands but also other commands like Active and Refresh can be issued. Refer to 8.1.2, CAS command timing constraints.

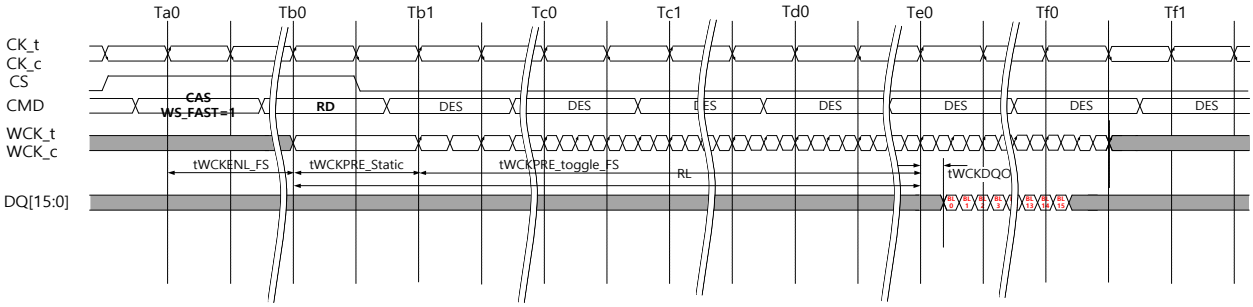

Figure 67 — Minimum latency WCK2CK Sync operation for CAS(WS_FAST=1)

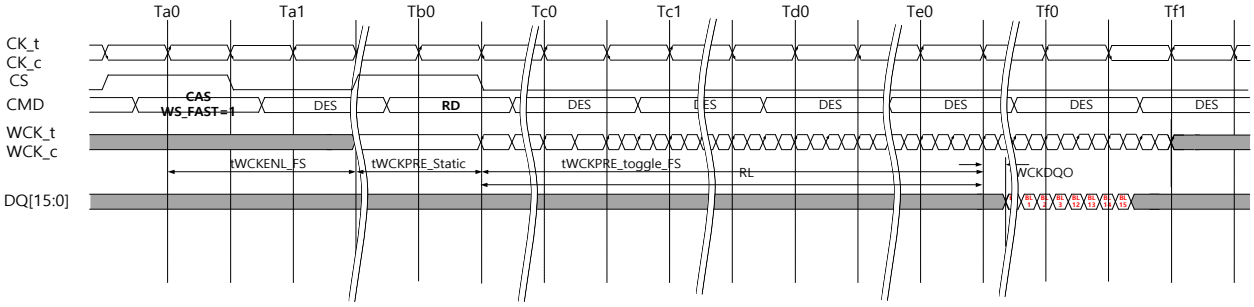

Figure 68 — WCK2CK sync operation for Read Operation with CAS(WS_FAST=1) with command gap

7.2.1.5 WCK2CK Sync operation with CAS(WS_FAST=1) (Cont'd)

Table 185 — WCK2CK Sync AC Parameters for CAS(WS_FAST)

WCK:CK Ratio	Data Rate [Mbps]		CK Frequency [MHz]		MR2 OP[3:0] setting	tWCKENL_FS [nCK]	tWCKPRE_Static [nCK]
	Lower Limit(>)	Upper Limit(≤)	Lower Limit(>)	Upper Limit(≤)			
2:1	40	533	10	133	0000_B	0	1
	533	1067	133	267	0001_B	0	2
	1067	1600	267	400	0010_B	1	2
	1600	2133	400	533	0011_B	1	3
	2133	2750	533	688	0100_B	1	4
	2750	3200	688	800	0101_B	2	4
4:1	40	533	5	67	0000_B	0	1
	533	1067	67	133	0001_B	0	1
	1067	1600	133	200	0010_B	1	1
	1600	2133	200	267	0011_B	1	2
	2133	2750	267	344	0100_B	1	2
	2750	3200	344	400	0101_B	1	2
	3200	3733	400	467	0110_B	1	3
	3733	4267	467	533	0111_B	1	3
	4267	4800	533	600	1000_B	2	3
	4800	5500	600	688	1001_B	2	4
	5500	6000	688	750	1010_B	2	4
	6000	6400	750	800	1011_B	2	4

7.2.1.6 Rank to rank WCK2CK Sync operation

There are two different methods to control WCK2CK Sync state of two rank LPDDR5 SDRAM. The first method is to start WCK2CK Sync process of rank 1 after completing DQ data burst of rank 0 as shown in Figure 69. In this case, tWCKPST of rank 0 and tWCKPRE of rank 1 should be guaranteed for right RDQS post-amble of read operation of rank 0 and for right WCK2CK Synchronization operation of rank 1, respectively.

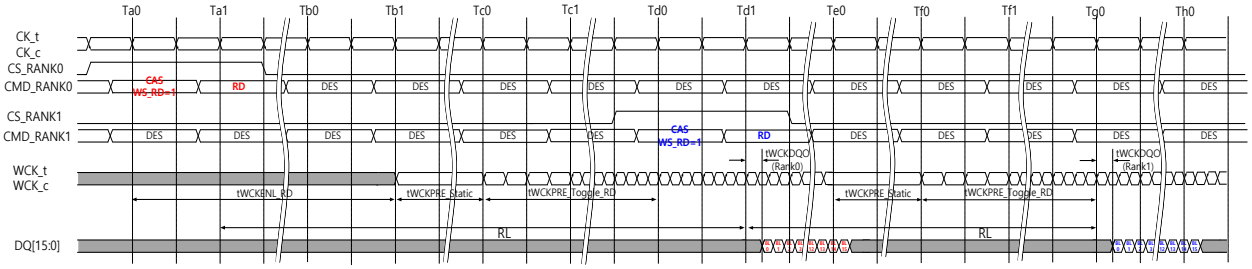

Figure 69 — Minimum gap rank to rank read operation with WCK2CK Sync after completing DQ burst in one rank

The second method is to start WCK2CK Sync process of both ranks simultaneously as shown in Figure 70. When both ranks are not in WCK2CK synchronized state and DQ bursts between two ranks are closed, a simultaneous CAS command with WS_FAST=1 is the recommended way, considering efficient DQ bus utilization.

If the following DQ bursts of one rank are far from the preceding ones of the other rank, extra power consumption due to WCK toggle should be considered. After synchronizing both ranks, if rank 0 is not used, CAS (WCK buffer off) command can be issued to rank 0 to save power.

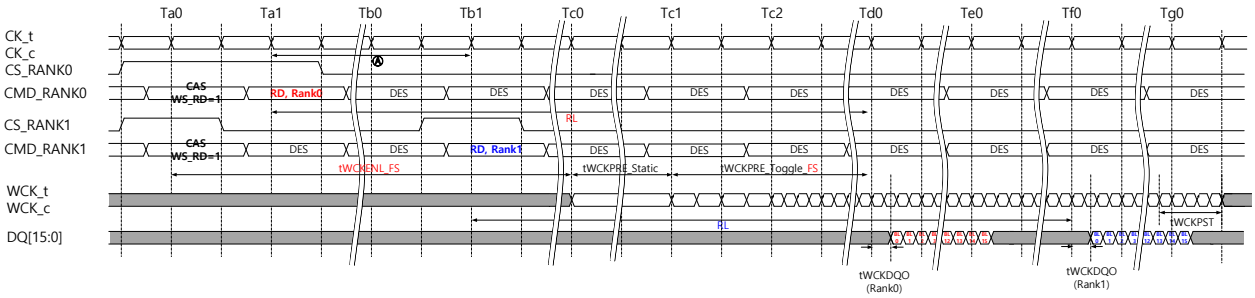

Figure 70 — Simultaneous WCK2CK Sync process for multi-ranks (especially two ranks)

7.2.2 **WCK2CK SYNC Off Timing Definition**

The next commands which require WCK2CK SYNC can be issued up to the maximum timing defined as the following tables. Duplicated CAS(WS_WR/RD) command issuing is inhibited during this period. Once the maximum timing is exceeded, CAS(WS_FS or WS_WR/RD) command is required to issue before issuing the commands which require WCK2CK SYNC. Continuous WCK input should maintain at least to meet the following min WCK toggling cycles in a WCK domain.

- WL/RL + BL/n_max + RD(tWCKPST/tCK) (BG mode)
- WL/RL + BL/n_max + (tWCKPST – 0.5*tWCK) (8B/16B mode)

Table 1 WCK2CK SYNC Off Timing Definition (16B Mode) for WR16/32, RD16/32 and MWR

Current Command	Next Command	Bank Relationship	Command Timing Constraints w/o a new WCK2CK SYNC Start		Note
			Min	Max	
WRITE (WR16, WR32)	WRITE (WR16, WR32)	Any Banks	BL/n	WL + BL/n_max + RD(tWCKPST/tCK)	2
	MASK WRITE	Same Bank	4*BL/n (WR16) 2.5*BL/n (WR32)	WL + BL/n_max + RD(tWCKPST/tCK)	1, 2, 3
		Different Banks	BL/n	WL + BL/n_max + RD(tWCKPST/tCK)	2
	READ (RD16, RD32)	Any Banks	WL + BL/n + RU(tWTR/tCK)	-	1, 2
MASK WRITE	WRITE (WR16, WR32)	Any Banks	BL/n	WL + BL/n_max + RD(tWCKPST/tCK)	2
	MASK WRITE	Same Bank	4*BL/n	WL + BL/n_max + RD(tWCKPST/tCK)	1, 2, 3
		Different Banks	BL/n	WL + BL/n_max + RD(tWCKPST/tCK)	2
	READ (RD16, RD32)	Any Banks	WL + BL/n + RU(tWTR/tCK)	-	1, 2
READ (RD16, RD32)	WRITE (WR16, WR32)	Any Banks	RL + BL/n + RU(tWCKDQO(max) /tCK) - WL	RL + BL/n_max + RD(tWCKPST/tCK)	2
	MASK WRITE	Any Banks	RL + BL/n + RU(tWCKDQO(max) /tCK) - WL	RL + BL/n_max + RD(tWCKPST/tCK)	2
	READ (RD16, RD32)	Any Banks	BL/n	RL + BL/n_max + RD(tWCKPST/tCK)	2

Note 1. Next command shall be issued with a new WCK2CK SYNC start (CAS-WS_FS or CAS-WS_WR/RD).
Note 2. WCK2CK SYNC shall be initiated before issuing the current command.
Note 3. If Min timing is larger than Max timing depending WL, a new WCK2CK SYNC start (CAS-WS_FS/WS_WR) is required before issuing a next command.

Table 2 WCK2CK SYNC Off Timing Definition (BG Mode) for WR16/32, RD16/32 and MWR

Current Command	Next Command	Bank Relationship	Command Timing Constraints w/o a new WCK2CK SYNC Start		Note
			Min	Max	
WRITE (WR16, WR32)	WRITE (WR16, WR32)	Any Banks	BL/n	WL + BL/n_max + RD(tWCKPST/tCK)	2
	MASK WRITE	Same Bank in Same BG	4*BL/n_max (WR16) 2.5*BL/n_max (WR32)	WL + BL/n_max + RD(tWCKPST/tCK)	1, 2, 3
		Different Banks in Same BG	BL/n_max	WL + BL/n_max + RD(tWCKPST/tCK)	1, 2
		Different Banks in Different BG	BL/n	WL + BL/n_max + RD(tWCKPST/tCK)	2
	READ (RD16, RD32)	Same or Different Banks in Same BG	WL + BL/n_max + RU(tWTR_L/tCK)	-	1, 2
		Different Banks in Different BG	WL + BL/n_min + RU(tWTR_S/tCK)	-	1, 2
MASK WRITE	WRITE (WR16, WR32)	Any Banks	BL/n	WL + BL/n_max + RD(tWCKPST/tCK)	2
	MASK WRITE	Same Banks in Same BG	4*BL/n_max	WL + BL/n_max + RD(tWCKPST/tCK)	1, 2, 3
		Different Banks in Same BG	BL/n_max	WL + BL/n_max + RD(tWCKPST/tCK)	2
		Different Banks in Different BG	BL/n	WL + BL/n_max + RD(tWCKPST/tCK)	2
	READ (RD16, RD32)	Same or Different Banks in Same BG	WL + BL/n_max + RU(tWTR_L/tCK)	-	1, 2
		Different Banks in Different BG	WL + BL/n_min + RU(tWTR_S/tCK)	-	1, 2
READ (RD16, RD32)	WRITE (WR16, WR32)	Same or Different Banks in Same BG	RL + BL/n_max + RU(tWCKDQO(max) /tCK) - WL	RL + BL/n_max + RD(tWCKPST/tCK)	2
		Different Banks in Different BG	RL + BL/n_min + RU(tWCKDQO(max) /tCK) - WL		2
	MASK WRITE	Same or Different Banks in Same BG	RL + BL/n_max + RU(tWCKDQO(max) /tCK) - WL	RL + BL/n_max + RD(tWCKPST/tCK)	2
		Different Banks in Different BG	RL + BL/n_min + RU(tWCKDQO(max) /tCK) - WL		2
	READ (RD16, RD32)	Any Banks	BL/n	RL + BL/n_max + RD(tWCKPST/tCK)	2

Note 1. Next command shall be issued with a new WCK2CK SYNC start (CAS-WS_FS or CAS-WS_WR/RD).
Note 2. WCK2CK SYNC shall be initiated before issuing the current command.
Note 3. If Min timing is larger than Max timing depending WL, a new WCK2CK SYNC start (CAS-WS_FS/WS_WR) is required before issuing a next command.

Table 3 WCK2CK SYNC Off Timing Definition (8B Mode) for WR16/32, RD16/32 and MWR

Current Command	Next Command	Bank Relationship	Command Timing Constraints w/o a new WCK2CK SYNC start		Note
			Min	Max	
WRITE	WRITE	Any Banks	BL/n	WL + BL/n_max + RD(tWCKPST/tCK)	2
	MASK WRITE	Same Bank	4*BL/n	WL + BL/n_max + RD(tWCKPST/tCK)	1, 2, 3
		Different Banks	BL/n	WL + BL/n_max + RD(tWCKPST/tCK)	2
	READ	Any Banks	WL + BL/n + RU(tWTR/tCK)	-	1, 2
MASK WRITE	WRITE	Any Banks	BL/n	WL + BL/n_max + RD(tWCKPST/tCK)	2
	MASK WRITE	Same Bank	4*BL/n	WL + BL/n_max + RD(tWCKPST/tCK)	1, 2, 3
		Different Banks	BL/n	WL + BL/n_max + RD(tWCKPST/tCK)	2
	READ	Any Banks	WL + BL/n + RU(tWTR/tCK)	-	1, 2
READ	WRITE	Any Banks	RL + BL/n + RU(tWCKDQO(max) /tCK) - WL	RL + BL/n_max + RD(tWCKPST/tCK)	2
	MASK WRITE	Any Banks	RL + BL/n + RU(tWCKDQO(max) /tCK) - WL	RL + BL/n_max + RD(tWCKPST/tCK)	2
	READ	Any Banks	BL/n	RL + BL/n_max + RD(tWCKPST/tCK)	2

Note 1. Next command shall be issued with a new WCK2CK SYNC start (CAS-WS_FS or CAS-WS_WR/RD).
Note 2. WCK2CK SYNC shall be initiated before issuing the current command.
Note 3. If Min timing is larger than Max timing depending WL, a new WCK2CK SYNC start (CAS-WS_FS/WS_WR) is required before issuing a next command.

Table 4 WCK2CK SYNC Off Timing Definition for MRR

Current Command	Next Command	Command Timing Constraints w/o a new WCK2CK SYNC start		Note
		Min	Max	
MRR	MRR	tMRR	RL + BL/n_max + RD(tWCKPST/tCK)	2, 4
	READ (RD16, RD32 with or w/o AP)	RL + BL/n_max +RD(tWCKPST/tCK) + 2	-	1, 2, 4
	WRITE (WR16, WR32, MWR with or w/o AP)	RL + BL/n_max + RU(tWCKDQO(max)/tCK) – WL +2	RL + BL/n_max + RD(tWCKPST/tCK)	2, 3, 4
READ (RD16, RD32 with or w/o AP)	MRR	RL + BL/n_max + RD(tWCKPST/tCK) + 2	-	1, 2
WRITE (WR16, WR32, MWR with or w/o AP)	MRR	WL + BL/n_max + RU(tWTR/tCK)	-	1, 2

Note 1. Next command shall be issued with a new WCK2CK SYNC start (CAS-WS_FS or CAS-WS_RD).
Note 2. WCK2CK SYNC shall be initiated before issuing the current command.
Note 3. In case of DQ ODT enabled, MRR-WRITE (min) should be “RL + BL/n_max + RU(tWCKDQO(max)/tCK) – ODTLon – RD(tODTon(min)/tCK) +2”.
Note 4. Actual BL/n_max value is as follows;
CKR=2:1, 16B mode=4nCK, 8B mode=8nCK,
CKR=4:1, 16B mode=2nCK, BG mode=4nCK, 8B mode=4nCK

Table 5 WCK2CK SYNC Off Timing Definition for Training Commands

Current Command	Next Command	Command Timing Constraints w/o a new WCK2CK SYNC start		Note
		Min	Max	
WRITE FIFO (WFF)	WRITE FIFO (WFF)	2nCK (CKR=4:1) 4nCK (CKR=2:1)	WL + BL/n_max + RD(tWCKPST/tCK)	2, 3
	READ FIFO (RFF)	WL + BL/n_max + RU(tWTR/tCK)	-	1, 2, 3
	WRITE (WR16, WR32, MWR with or w/o AP)	Not Allowed		2
	READ (RD16, RD32 with or w/o AP), MRR	Not Allowed		2
	READ DQ Calibration (RDC)	Not Allowed		2
READ FIFO (RFF)	WRITE FIFO (WFF)	tRTW	RL + BL/n_max + RD(tWCKPST/tCK)	2, 3
	READ FIFO (RFF)	2nCK (CKR=4:1) 4nCK (CKR=2:1)	RL + BL/n_max + RD(tWCKPST/tCK)	2, 3
	WRITE (WR16, WR32, MWR with or w/o AP)	tRTRRD	-	1, 2
	READ (RD16, RD32 with or w/o AP), MRR	tRTRRD	-	1, 2
	READ DQ Calibration (RDC)	tRTRRD	-	1, 2
READ DQ Calibration (RDC)	WRITE FIFO (WFF)	tRTRRD	-	1, 2
	READ FIFO (RFF)	Not Allowed		2
	WRITE (WR16, WR32, MWR with or w/o AP)	tRTRRD	-	1, 2
	READ (RD16, RD32 with or w/o AP), MRR	tRTRRD	-	1, 2
	READ DQ Calibration (RDC)	2nCK (CKR=4:1) 4nCK (CKR=2:1)	RL + BL/n_max + RD(tWCKPST/tCK)	2, 3
WRITE (WR16, WR32, MWR with or w/o AP)	WRITE FIFO (WFF)	tWRWTR	-	1, 2
	READ FIFO (RFF)	Not Allowed		2
	READ DQ Calibration (RDC)	WL + BL/n_max + RU(tWTR/tCK)	-	1, 2
READ (RD16, RD32 with or w/o AP), MRR	WRITE FIFO (WFF)	tRTRRD	-	1, 2
	READ FIFO (RFF)	Not Allowed		2
	READ DQ Calibration (RDC)	tRTRRD	-	1, 2

Note 1. Next command shall be issued with a new WCK2CK SYNC start (CAS-WS_FS or CAS-WS_WR/RD).
Note 2. WCK2CK SYNC shall be initiated before issuing the current command.
Note 3. Actual BL/n_max value is as follows;
CKR=2:1, 16B mode=4nCK, 8B mode=8nCK,
CKR=4:1, 16B mode=2nCK, BG mode=4nCK, 8B mode=4nCK

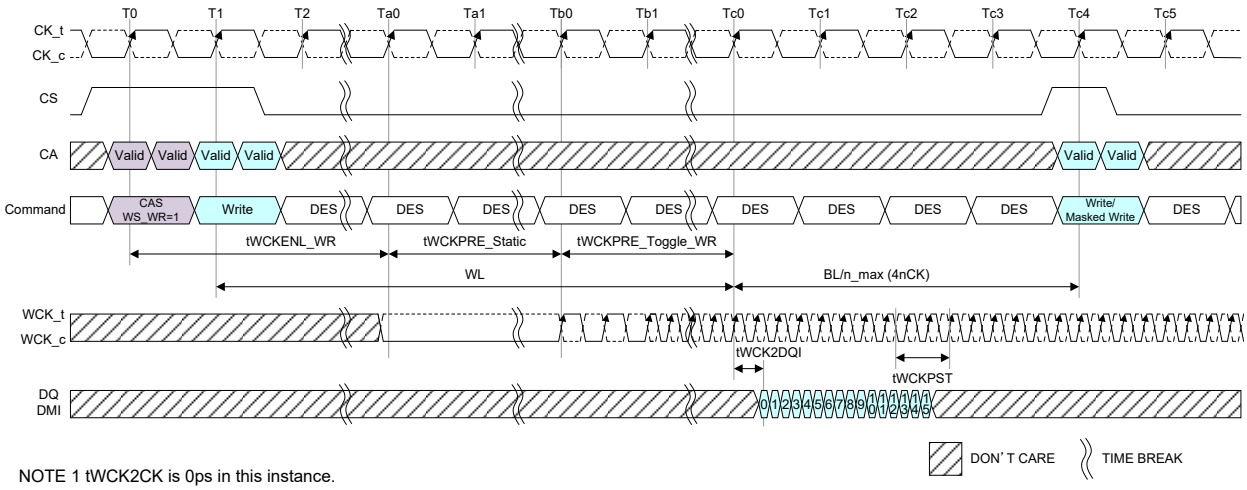

NOTE 1 tWCK2CK is 0ps in this instance.
NOTE 2 The end of both WL and tWCKPRE_Toggle_WR are the same timing in this instance.
NOTE 3 Write/Masked Write command can be issued until Tc4. (See command constraints tables for details.)
NOTE 4 CAS Sync command is inhibited until Tc4.
NOTE 5 CAS Sync command can be issued after Tc5 (Tc5 is included)
NOTE 6 tWCKPST=2.5nWCK, RD(tWCKPST/tCK)=0

Figure 1 Write sync off timing BG Mode, CKR (WCK vs. CK) = 4:1, BL=16

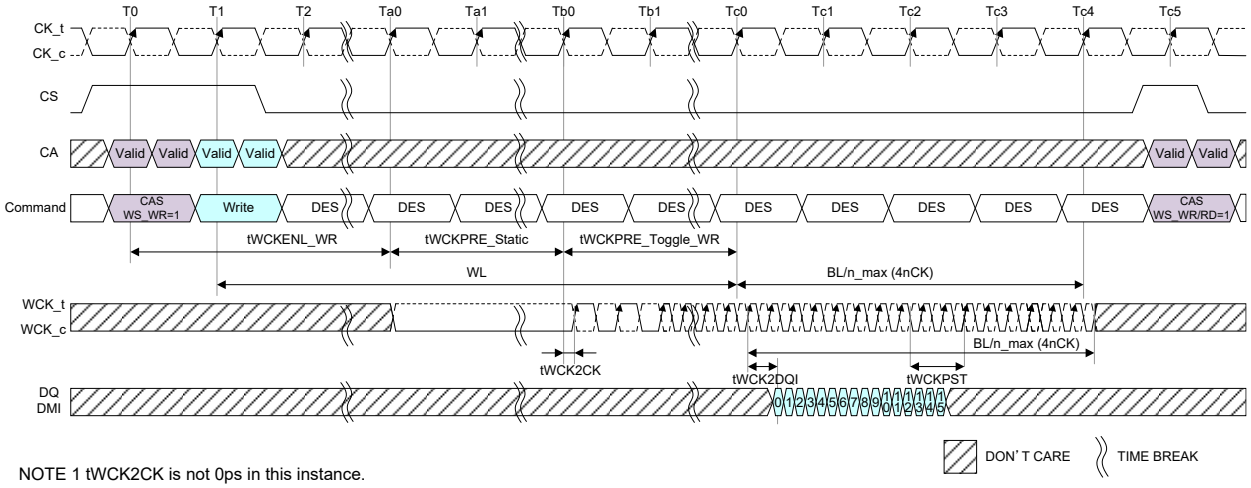

NOTE 1 tWCK2CK is not 0ps in this instance.
NOTE 2 The end of both WL and tWCKPRE_Toggle_WR are the same timing in this instance.
NOTE 3 Write/Masked Write command can be issued until Tc4. (See command constraints tables for details.)
NOTE 4 CAS Sync command is inhibited until Tc4.
NOTE 5 CAS Sync command can be issued after Tc5 (Tc5 is included)
NOTE 6 tWCKPST=2.5nWCK, RD(tWCKPST/tCK) = 0

Figure 2 Write sync off timing (WCK2CK Sync is expired), BG Mode, CKR(WCK vs. CK) = 4:1, BL=16

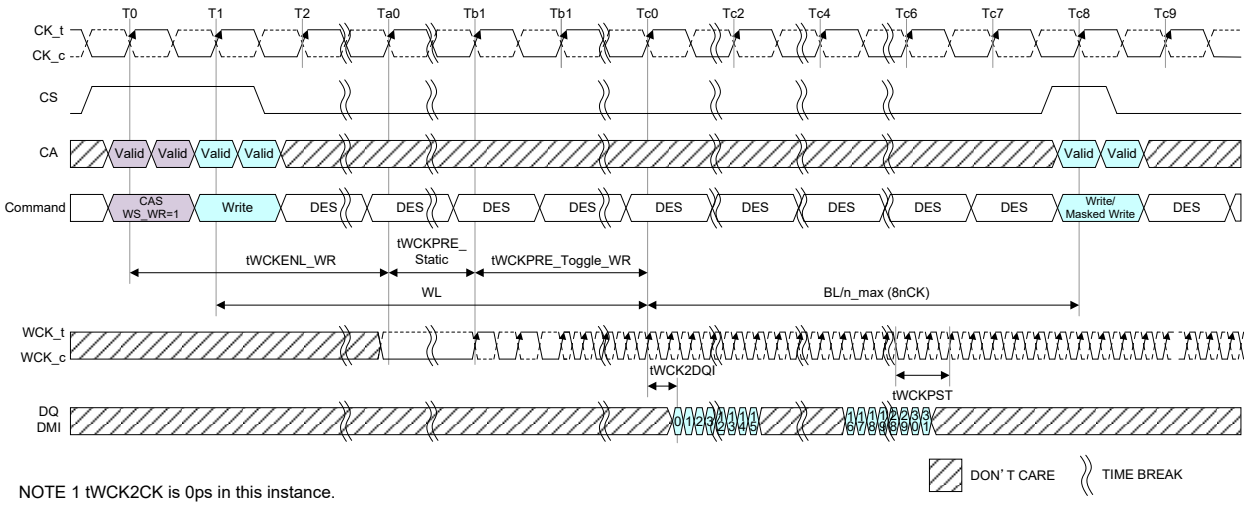

NOTE 1 tWCK2CK is 0ps in this instance.
NOTE 2 The end of both WL and tWCKPRE_Toggle_WR are the same timing in this instance.
NOTE 3 Write/Masked Write command can be issued until Tc8. (See command constraints tables for details.)
NOTE 4 CAS Sync command is inhibited until Tc8.
NOTE 5 CAS Sync command can be issued after Tc9 (Tc9 is included)
NOTE 6 tWCKPST=2.5nWCK, RD(tWCKPST/tCK)=0

Figure 3 Write sync off timing BG Mode : CKR (WCK vs. CK) = 4:1, BL=32

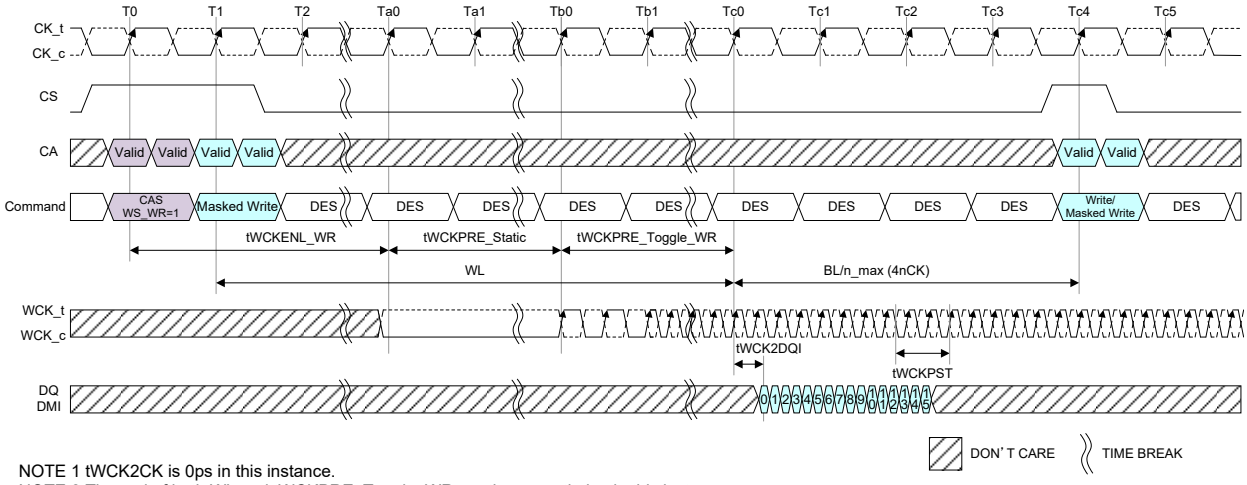

NOTE 1 tWCK2CK is 0ps in this instance.
NOTE 2 The end of both WL and tWCKPRE_Toggle_WR are the same timing in this instance.
NOTE 3 Write/Masked Write command can be issued until Tc4. (See command constraints tables for details.)
NOTE 4 CAS Sync command is inhibited until Tc4.
NOTE 5 CAS Sync command can be issued after Tc5 (Tc5 is included)
NOTE 6 tWCKPST=2.5nWCK, RD(tWCKPST/tCK)=0

Figure 4 Masked Write sync off timing BG Mode : CKR (WCK vs. CK) = 4:1, BL=16

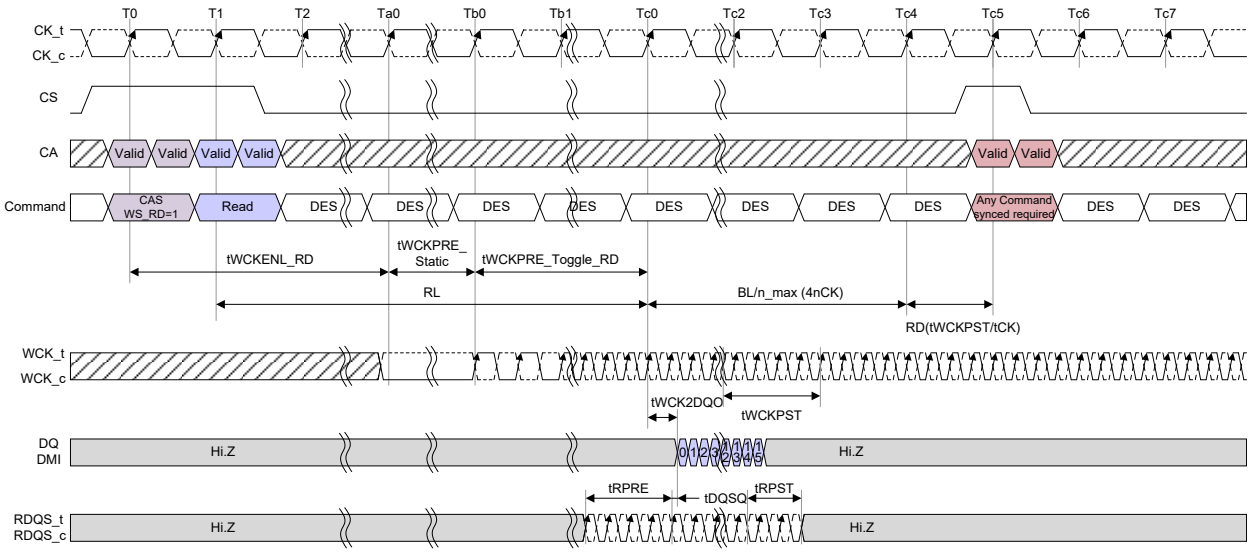

NOTE 1 tWCK2CK is 0ps in this instance.
NOTE 2 The end of both RL and tWCKPRE_Toggle_RD are the same timing in this instance.
NOTE 3 Any command synced required can be issued until Tc5. (See command constraints tables for details.)
NOTE 4 CAS Sync command is inhibited until Tc5.
NOTE 5 CAS Sync command can be issued after Tc6 (Tc6 is included)
NOTE 6 tWCKPST=4.5nWCK, RD(tWCKPST/tCK)=1

Figure 5 Read sync off timing BG Mode : CKR (WCK vs. CK) = 4:1, BL=16, tRPST=2.5nWCK

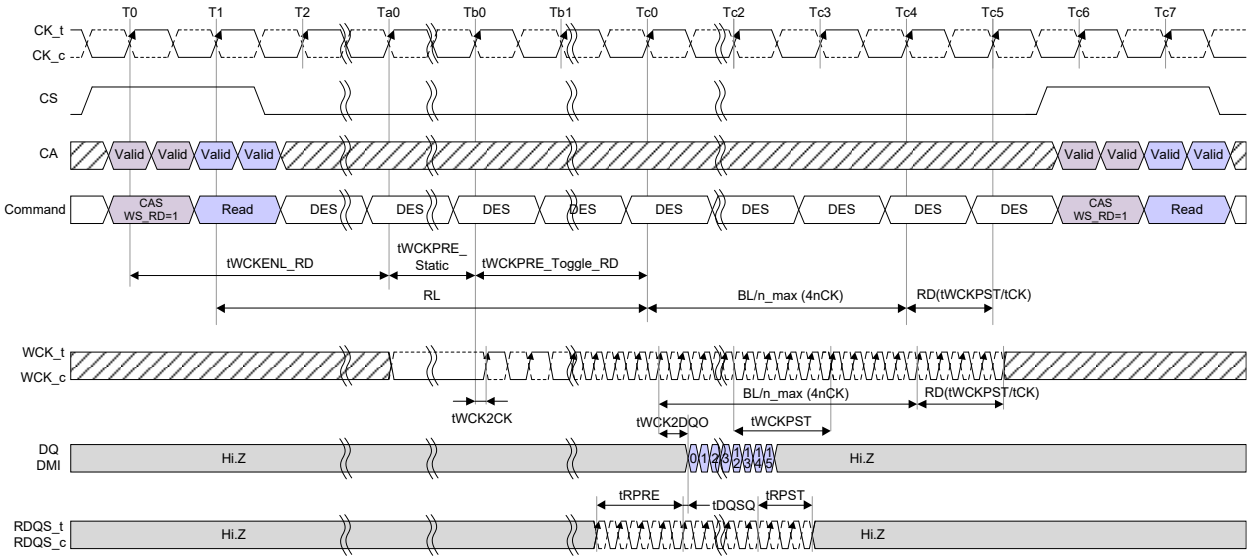

NOTE 1 tWCK2CK is not 0ps in this instance.
NOTE 2 The end of both RL and tWCKPRE_Toggle_RD are the same timing in this instance.
NOTE 3 Any command synced required can be issued until Tc5. (See command constraints tables for details.)
NOTE 4 CAS Sync command is inhibited until Tc5.
NOTE 5 CAS Sync command can be issued after Tc6 (Tc6 is included)
NOTE 6 tWCKPST=4.5nWCK, RD(tWCKPST/tCK)=1

Figure 6 Read sync off timing (WCK2CK Sync is expired) BG Mode, CKR= 4:1, BL=16, tRPST=2.5nWCK

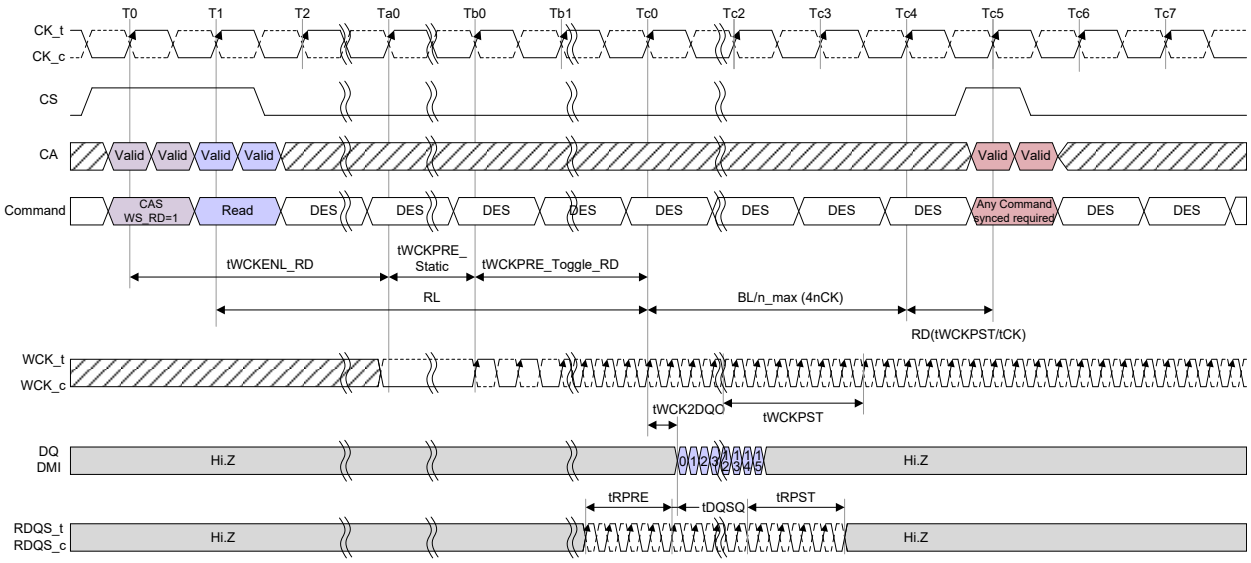

NOTE 1 tWCK2CK is 0ps in this instance.
NOTE 2 The end of both RL and tWCKPRE_Toggle_RD are the same timing in this instance.
NOTE 3 Any command synced required can be issued until Tc5. (See command constraints tables for details.)
NOTE 4 CAS Sync command is inhibited until Tc5.
NOTE 5 CAS Sync command can be issued after Tc6 (Tc6 is included)
NOTE 6 tWCKPST=6.5nWCK, RD(tWCKPST/tCK)=1

Figure 7 Read sync off timing BG Mode : CKR (WCK vs. CK) = 4:1, BL=16, tRPST=4.5nWCK

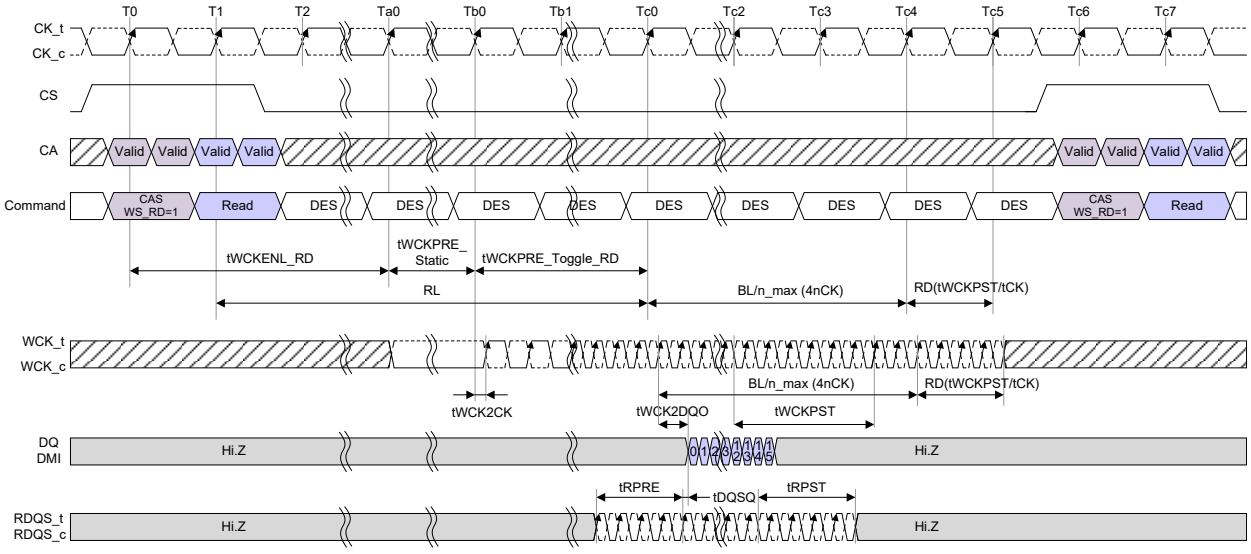

NOTE 1 tWCK2CK is 0ps in this instance.
NOTE 2 The end of both RL and tWCKPRE_Toggle_RD are the same timing in this instance.
NOTE 3 Any command synced required can be issued until Tc5. (See command constraints tables for details.)
NOTE 4 CAS Sync command is inhibited until Tc5.
NOTE 5 CAS Sync command can be issued after Tc6 (Tc6 is included)
NOTE 6 tWCKPST=6.5nWCK, RD(tWCKPST/tCK) = 1

Figure 8 Read sync off timing (WCK2CK Sync is expired) BG Mode, CKR= 4:1, BL=16, tRPST=4.5nWCK

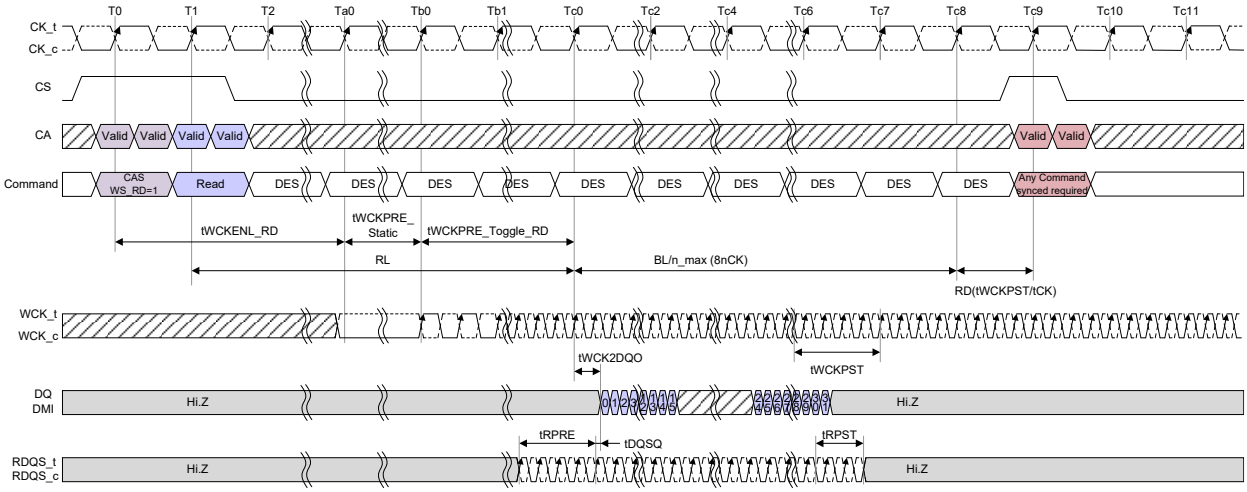

NOTE 1 tWCK2CK is 0ps in this instance.
NOTE 2 The end of both RL and tWCKPRE_Toggle_RD are the same timing in this instance.
NOTE 3 Any command synced required can be issued until Tc9. (See command constraints tables for details.)
NOTE 4 CAS Sync command is inhibited until Tc9.
NOTE 5 CAS Sync command can be issued after Tc10 (Tc10 is included)
NOTE 6 tWCKPST=4.5nWCK, RD(tWCKPST/tCK)=1

Figure 9 Read sync off timing BG Mode : CKR (WCK vs. CK) = 4:1, BL=32, tRPST=2.5nWCK

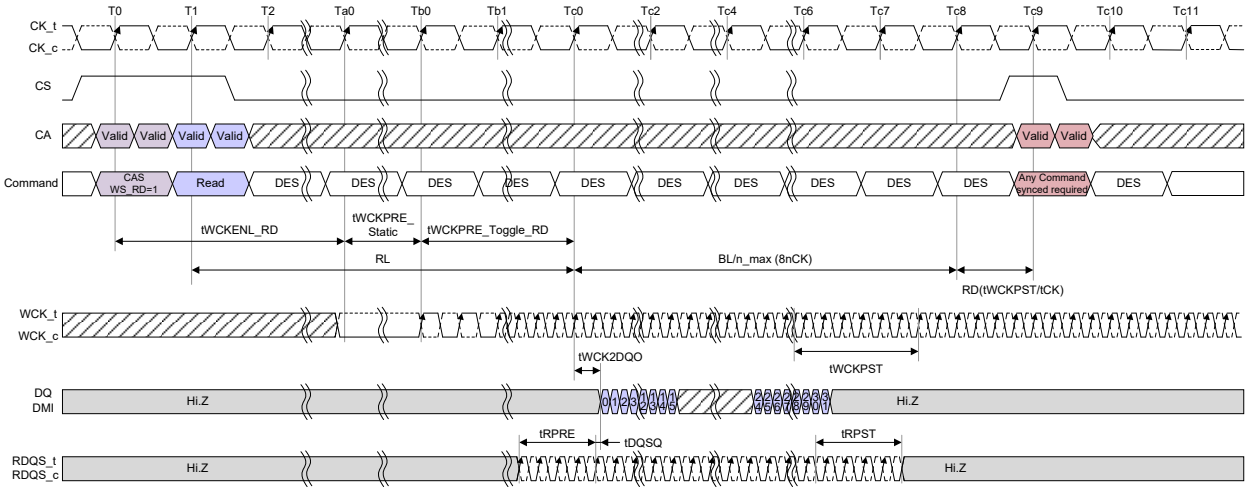

NOTE 1 tWCK2CK is 0ps in this instance.
NOTE 2 The end of both RL and tWCKPRE_Toggle_RD are the same timing in this instance.
NOTE 3 Any command synced required can be issued until Tc9. (See command constraints tables for details.)
NOTE 4 CAS Sync command is inhibited until Tc9.
NOTE 5 CAS Sync command can be issued after Tc10 (Tc10 is included)
NOTE 6 tWCKPST=6.5nWCK, RD(tWCKPST/tCK)=1

Figure 10 Read sync off timing BG Mode : CKR (WCK vs. CK) = 4:1, BL=32, tRPST=4.5nWCK

7.2.3 Write Clock Always on mode (WCK Always on mode)

An LPDDR5 SDRAM supports WCK Always on mode as an MRS option. WCK free running mode is enabled by setting MR18 OP[4] = 1_B. When WCK free running mode is enabled, the WCK buffer in an LPDDR5 SDRAM is turned on with WCK2CK synchronization and keeps being turned on until SDRAM receives power down, self-refresh power-down or deep-sleep commands or reset. Therefore, the SDRAM controller must keep WCK toggling at its full rate after WCK2CK synchronization regardless of DQ operation. As the WCK2CK synchronization information is lost with power down entry, the SDRAM controller must perform a WCK2CK synchronization sequence after power down exit before DQ operation.

Figure 71 illustrates WCK Always on mode with WCK2CK synchronization followed by a write command. In this timing diagram, SDRAM is initially in Bank Active state at T0. Therefore, the WCK buffer in SDRAM is off state, losing the WCK2CK synchronization information. Although, the MR18 OP[4]=1_B, the WCK buffer is not turned on until receiving a CAS command with WCK2CK-sync bit high (WS_WR, WS_RD or WS_FS). At T0, a CAS command with WS_WR=1 initiates WCK2CK synchronization process and turns on the WCK buffer in SDRAM. Once enabled, the WCK buffer keeps being on regardless of following commands until receiving the power-down entry command at Td2. At Td2, the power-down entry command turns off WCK buffer to reduce SDRAM power consumption. The timing diagram of WCK Always on mode starting with WCK2CK synchronization followed by a read command is shown in **Figure 72**.

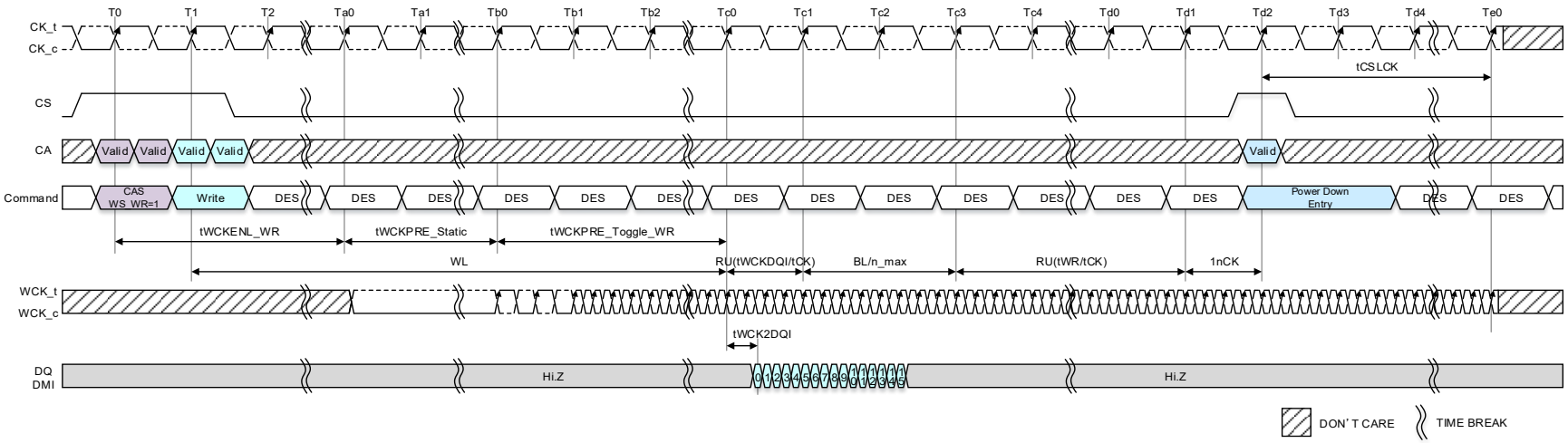

Figure 71 - WCK Always on mode starting with WCK2CK-sync operation followed by a write command: 16B Mode

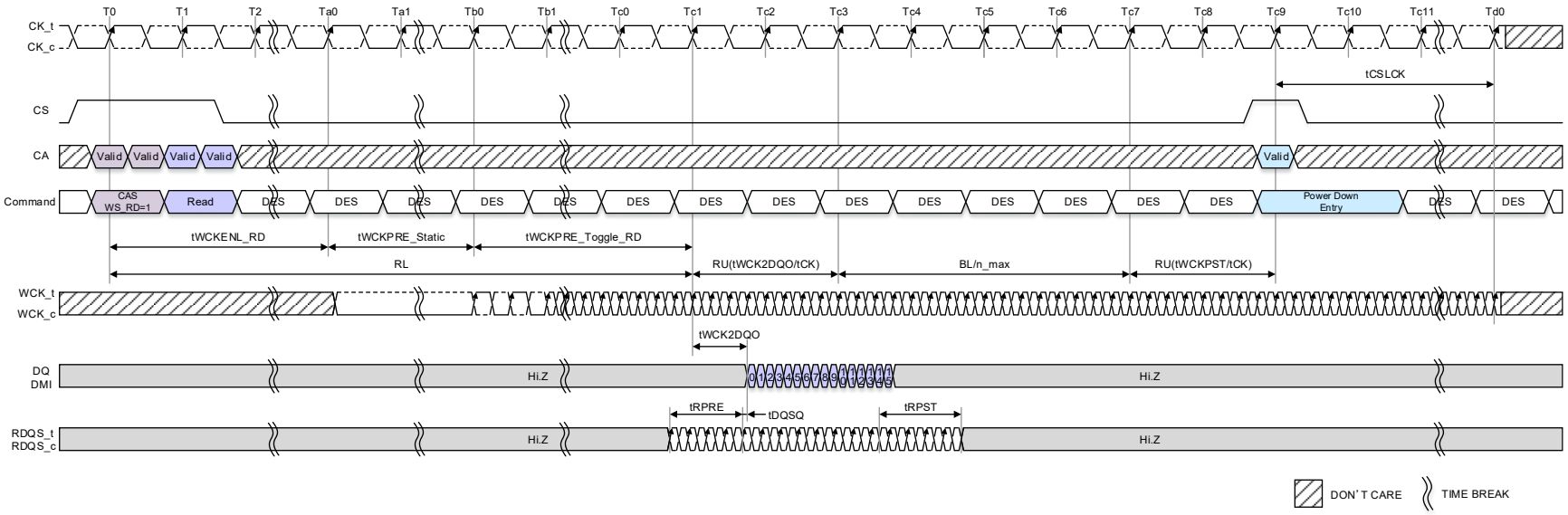

Figure 72 - WCK Always on mode starting with WCK2CK-sync operation followed by a read command: BG Mode, NT-ODT Disable

In WCK2CK sync state, SDRAM controller can turn off WCK buffer in SDRAM by sending a CAS(WS_OFF) command to save memory system power. This CAS(WS_OFF) command is shown in **Table 186**. SDRAM turns off WCK buffer asynchronously after receiving CAS(WS_OFF) command. After WCK buffer off, a new WCK2CK synchronization sequence is required. CAS(WS_OFF) command is allowed only when there is no on-going write, read or other DQ operation in the SDRAM. **Figure 73** and **Figure 74** illustrate CAS(WS_OFF) command based WCK buffer off following a write and read command, respectively. The required delay to issue CAS(WS_OFF) command after finishing DQ operation is tWCKOFF. The minimum value of tWCKOFF is BL/n_max + RD(tWCKPST/tCK) + 1 Refer to the CAS Command Timing Constraints table for CAS(WS_OFF) input timing details.

Table 186 - CAS(WS_OFF) command

Command	CS	CA0	CA1	CA2	CA3	CA4	CA5	CA6	CK
CAS	H	L	L	H	H	WS_WR=H	WS_RD=H	WS_FAST=H	R1
	X	L	L	L	L	L	L	L	F1

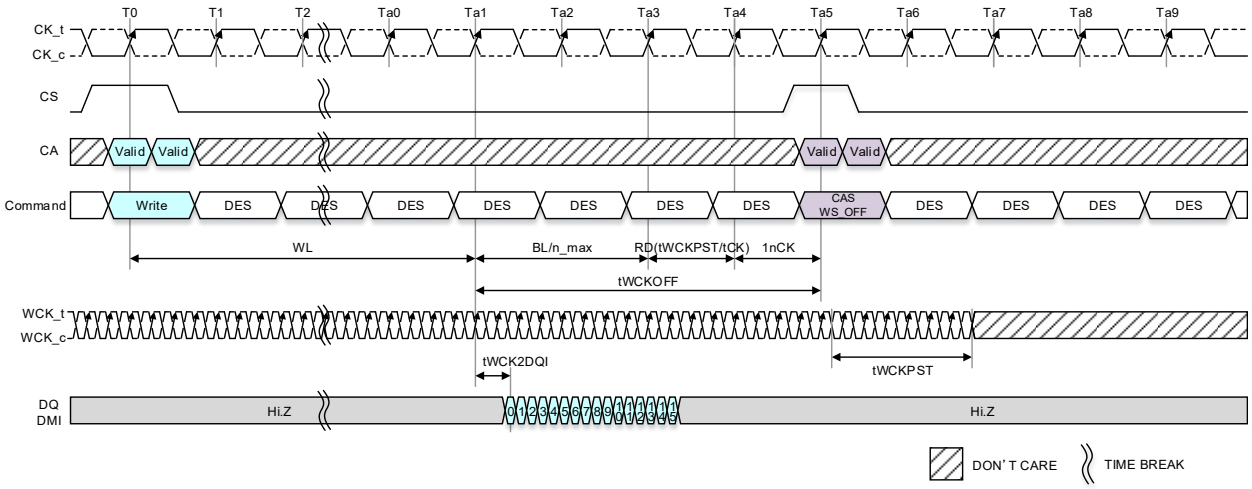

Figure 73 – Write to CAS(WS_OFF) timing: 16B mode, CKR4:1, tWCKPST=6.5tWCK

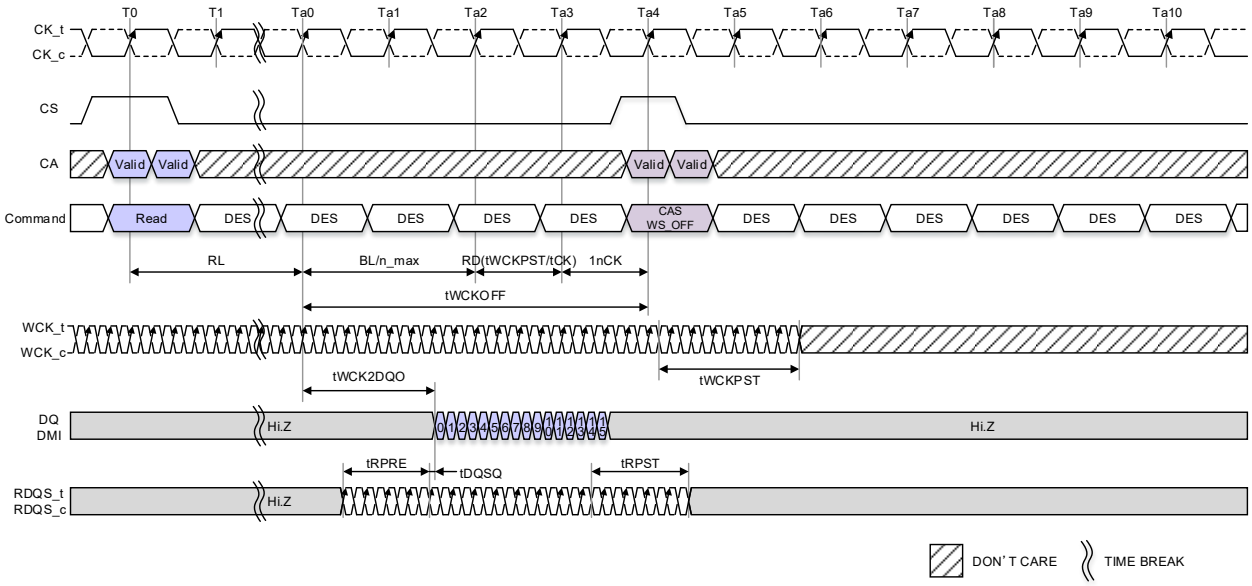

Figure 74 – Read to CAS(WS_OFF) Timing: 16B mode, CKR4:1, tWCKPST=6.5tWCK

7.3 Row operation

7.3.1 Active Command

The ACTIVATE command is composed of two commands, Activate-1 command and Activate-2. Activate-1 command is issued by holding CS HIGH, CA0 HIGH, CA1 HIGH, and CA2 HIGH at the rising edge of the clock and Activate-2 command issued by holding CS HIGH, CA0 HIGH, CA1 HIGH, and CA2 LOW at the rising edge of the clock. Activate-2 command shall be issued within 8 clock cycles (tAAD) after Activate-1 command was issued. Within tAAD period Only CAS, WRITE, MASKED WRITE, READ, MRR, PRECHARGE/Refresh (to a different bank) commands can be issued between ACTIVATE-1 and ACTIVATE-2 commands. It is an illegal operation if an Activate-2 command is not issued within tAAD of an Activate-1 command. During 8 bank mode, the bank addresses BA0, BA1, and BA2 are used to select desired bank. During BG mode, the bank/bank group addresses BA0, BA1, BG0, and BG1 are used to select desired bank. During 16 bank mode, the bank addresses BA0, BA1, BA2, and BA3 are used to select desired bank. Row addresses are used to determine which row to activate in the selected bank. The ACTIVATE command is required to be applied before any READ or WRITE/Masked Write operation can be executed. The SDRAM can accept a READ or WRITE/Masked Write command at tRCD after the ACTIVATE command is issued. After a bank has been activated, precharge command is issued to precharge bank or banks. The bank active and precharge times are defined as tRAS and tRP respectively. The minimum time interval between ACTIVATE commands to the same bank is determined by the RAS cycle time of the SDRAM (tRC). The minimum time interval between ACTIVATE commands to different banks is tRRD.

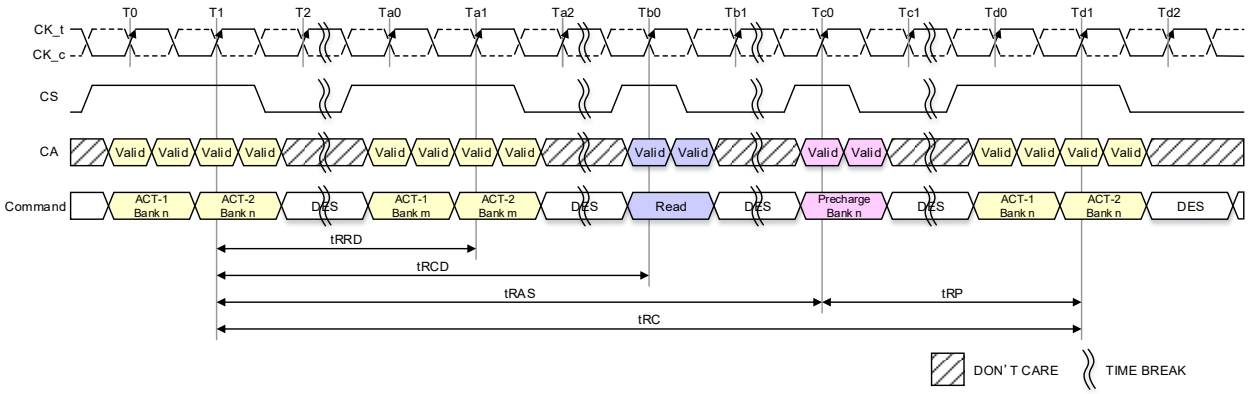

NOTE 1 DES commands are shown for ease of illustration; other commands may be valid at these times.

NOTE 2 A PRECHARGE command uses tRPab timing for all bank PRECHARGE and tRPpb timing for single-bank PRECHARGE. In this figure, tRP is used to denote either all bank PRECHARGE or a single-bank PRECHARGE.

Figure 75 — Activate command for 8B/16B mode

7.3.1 Active Command (Cont'd)

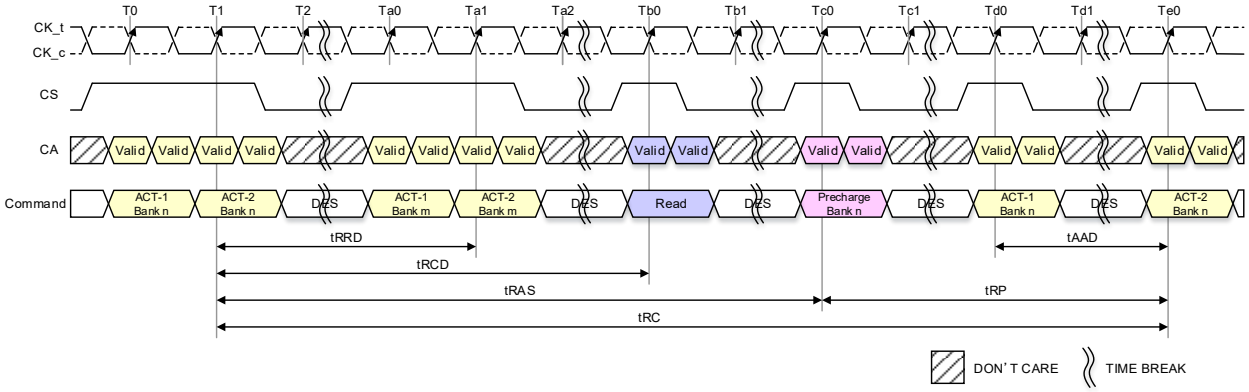

NOTE 1 DES commands are shown for ease of illustration; other commands may be valid at these times.

NOTE 2 A PRECHARGE command uses tRPab timing for all bank PRECHARGE and tRPpb timing for single-bank PRECHARGE. In this figure, tRP is used to denote either all bank PRECHARGE or a single-bank PRECHARGE.

Figure 76 — Activate Command with Activate1 and Activate-2 spacing for 8B/16B mode

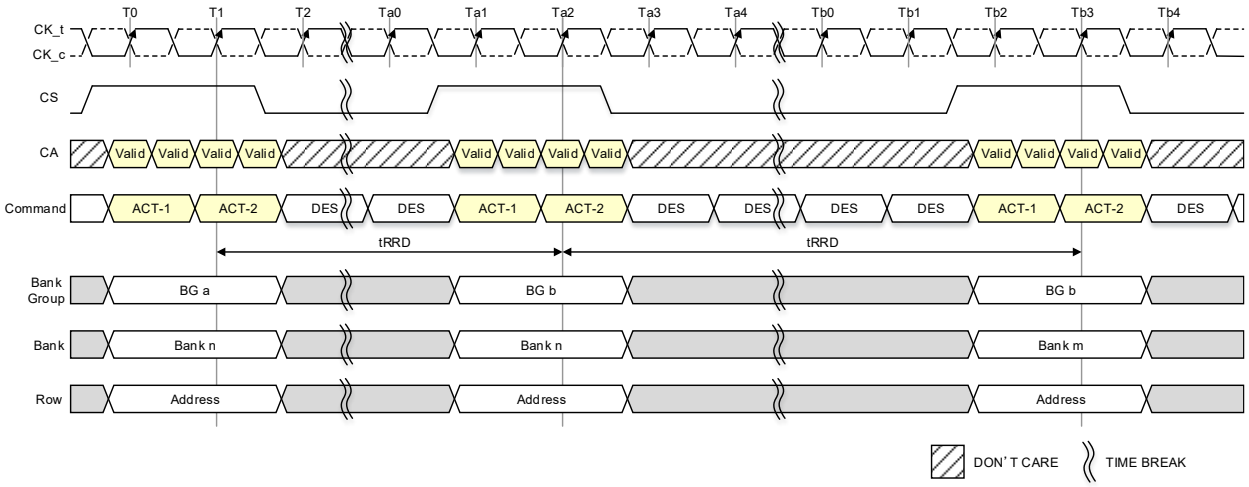

NOTE 1 DES commands are shown for ease of illustration; other commands may be valid at these times.

NOTE 2 tRRD: ACTIVATE to ACTIVATE Command period: Applies to consecutive ACTIVATE Commands to different Bank Group.

NOTE 3 tRRD: ACTIVATE to ACTIVATE Command period: Applies to consecutive ACTIVATE Commands to the different Banks of the same Bank Group, too.

Figure 77 — Activate command for BG mode

7.3.1.1 8-Bank mode SDRAM Operation

Certain restrictions on operation of the 8-banks LPDDR5 SDRAM are required to be observed the number of sequential Bank Activation that can be issued.

8 bank SDRAM Sequential Bank Activation Restriction:

No more than 4 Banks may be activated (or refreshed, in the case of REFpb) in a rolling tFAW window. The number of clocks in a tFAW period is dependent upon the clock frequency, which may vary. If the clock frequency is not changed over this period, converting clocks is done by dividing tFAW[ns] by tCK[ns], and rounding up to the next integer value. As an example of the rolling window, if RU(tFAW/tCK) is 10 clocks, and an ACTIVATE command is issued in clock n, no more than three further ACTIVATE commands can be issued at or between clock n + 1 and n + 9. REFpb also counts as bank activation for purposes of tFAW. If the clock frequency is changed during the tFAW period, the rolling tFAW window may be calculated in clock cycles by adding up the time spent in each clock period. The tFAW requirement is met when the previous n clock cycles exceed the tFAW time.

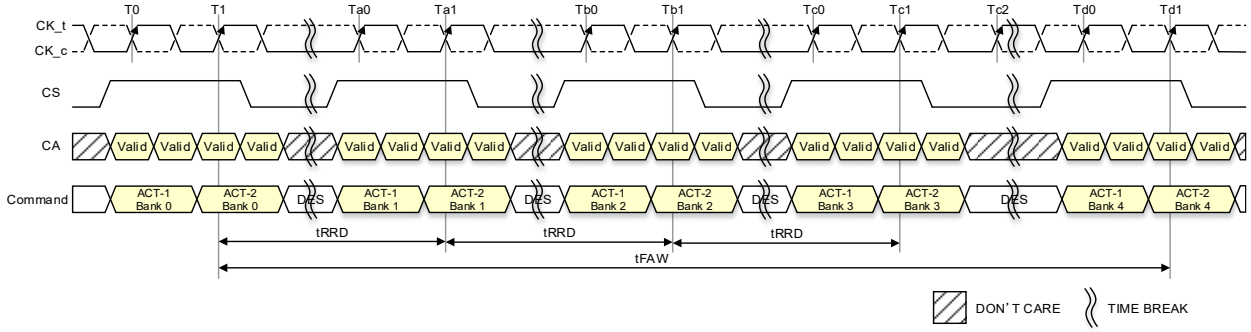

NOTE 1 DES commands are shown for ease of illustration; other commands may be valid at these times.

Figure 78 — 8 Banks tFAW Timing

7.3.1.2 BG mode SDRAM Operation

Certain restrictions on operation of the BG mode LPDDR5 SDRAM is required to be observed the number of sequential ACTIVATE commands that can be issued.

BG mode SDRAM Sequential Bank Activation Restriction:

No more than 4 Banks may be activated (or refreshed, in the case of REFpb) in a rolling tFAW window. The number of clocks in a tFAW period is dependent upon the clock frequency, which may vary. If the clock frequency is not changed over this period, converting clocks is done by dividing tFAW[ns] by tCK[ns], and rounding up to the next integer value. As an example of the rolling window, if RU(tFAW /tCK) is 10 clocks, and an ACTIVATE command is issued in clock n, no more than three further ACTIVATE commands can be issued at or between clock n + 1 and n + 9. REFpb also counts as bank activation for purposes of tFAW. If the clock frequency is changed during the tFAW period, the rolling tFAW window may be calculated in clock cycles by adding up the time spent in each clock period. The tFAW requirement is met when the previous n clock cycles exceed the tFAW time.

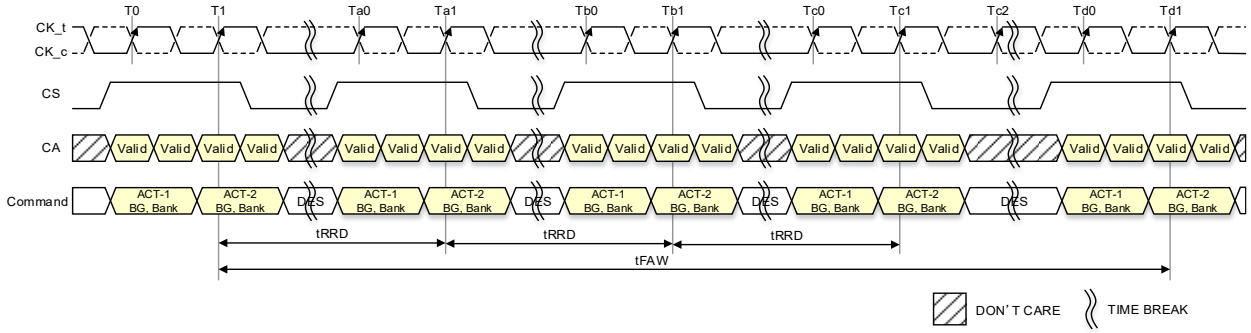

Figure 79 — BG mode tFAW timing

7.3.2 Pre-Charge Operation

7.3.2.1 Pre-Charge Operation

The Precharge command is used to Precharge or close a bank that has been activated. The Precharge command is initiated with CS, and CA[6:0] in the proper state as defined by the Command Truth Table,**Table 178**. The Precharge command can be used to precharge each bank independently or all banks simultaneously. The AB flag and the bank address bit are used to determine which bank(s) to Precharge. The Precharged bank(s) will be available for subsequent row access tRPab after an all-bank Precharge command is issued, or tRPpb after a single-bank Precharge command is issued.

To ensure that LPDDR5 devices can meet the instantaneous current demands, the row-Precharge time for an all-bank Precharge (tRPab) is longer than the per bank Precharge time (tRPpb).

Table 187 — Precharge Bank Selection 8 Bank mode

AB (CA[6], F1)	BA2 (CA[2], F1)	BA1 (CA[1], F1)	BA0 (CA[0], F1)	Precharged Bank(s)
0	0	0	0	Bank 0 only
0	0	0	1	Bank 1 only
0	0	1	0	Bank 2 only
0	0	1	1	Bank 3 only
0	1	0	0	Bank 4 only
0	1	0	1	Bank 5 only
0	1	1	0	Bank 6 only
0	1	1	1	Bank 7 only
1	Valid	Valid	Valid	All Banks

7.3.2.1 Pre-Charge Operation (Cont'd)

Table 188 — Precharge Bank Selection 4 Bank / 4 Bank Group mode

AB (CA[6], F1)	BG1 (CA[3], F1)	BG0 (CA[2], F1)	BA1 (CA[1], F1)	BA0 (CA[0], F1)	Precharged Bank(s)
0	0	0	0	0	Bank Group 0, Bank 0 only
0	0	0	0	1	Bank Group 0, Bank 1 only
0	0	0	1	0	Bank Group 0, Bank 2 only
0	0	0	1	1	Bank Group 0, Bank 3 only
0	0	1	0	0	Bank Group 1, Bank 0 only
0	0	1	0	1	Bank Group 1, Bank 1 only
0	0	1	1	0	Bank Group 1, Bank 2 only
0	0	1	1	1	Bank Group 1, Bank 3 only
0	1	0	0	0	Bank Group 2, Bank 0 only
0	1	0	0	1	Bank Group 2, Bank 1 only
0	1	0	1	0	Bank Group 2, Bank 2 only
0	1	0	1	1	Bank Group 2, Bank 3 only
0	1	1	0	0	Bank Group 3, Bank 0 only
0	1	1	0	1	Bank Group 3, Bank 1 only
0	1	1	1	0	Bank Group 3, Bank 2 only
0	1	1	1	1	Bank Group 3, Bank 3 only
1	Valid	Valid	Valid	Valid	All Banks

Table 189 — Precharge Bank Selection 16 Banks mode

AB (CA[6], F1)	BA3 (CA[3], F1)	BA2 (CA[2], F1)	BA1 (CA[1], F1)	BA0 (CA[0], F1)	Precharged Bank(s)
0	0	0	0	0	Bank 0 only
0	0	0	0	1	Bank 1 only
0	0	0	1	0	Bank 2 only
0	0	0	1	1	Bank 3 only
0	0	1	0	0	Bank 4 only
0	0	1	0	1	Bank 5 only
0	0	1	1	0	Bank 6 only
0	0	1	1	1	Bank 7 only
0	1	0	0	0	Bank 8 only
0	1	0	0	1	Bank 9 only
0	1	0	1	0	Bank 10 only
0	1	0	1	1	Bank 11 only
0	1	1	0	0	Bank 12 only
0	1	1	0	1	Bank 13 only
0	1	1	1	0	Bank 14 only
0	1	1	1	1	Bank 15 only
1	Valid	Valid	Valid	Valid	All Banks

7.3.2.1 Pre-Charge Operation (Cont'd)

The Precharge command can be issued after BL/n + tRBTP has been satisfied when bank organization is 16B mode. Refer to 8.1.1 for the command constraints tables for other modes (BG and 8B mode). However Precharge cannot be issued until after tRAS is satisfied. A new bank Activate command can be issued to the same bank after the row Precharge time (tRP) has elapsed. The minimum Read-to- Precharge time must also satisfy a minimum analog time from the rising clock edge the Read command. For LPDDR5 Read-to- Precharge timings see Figure 80.

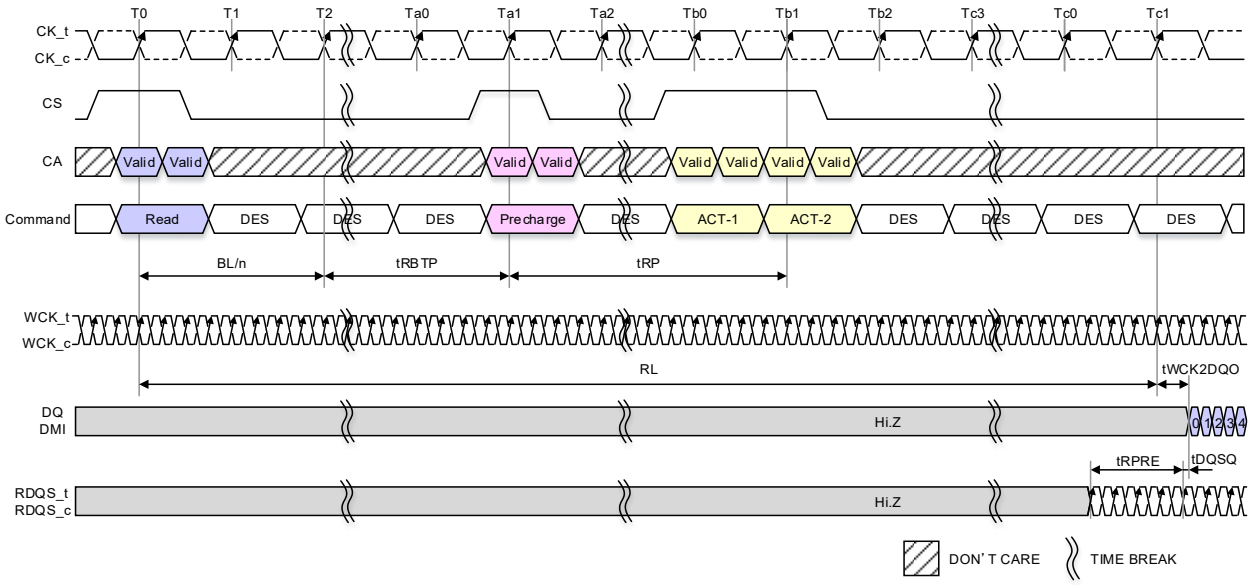

NOTE 1 tWCK2CK is 0ps in this instance.
NOTE 2 DES commands are shown for ease of illustration; other commands may be valid at these times.

Figure 80 — Burst Read followed by Precharge: 16B Mode, CKR = 4:1, BL=16

7.3.2.1 Pre-Charge Operation (Cont'd)

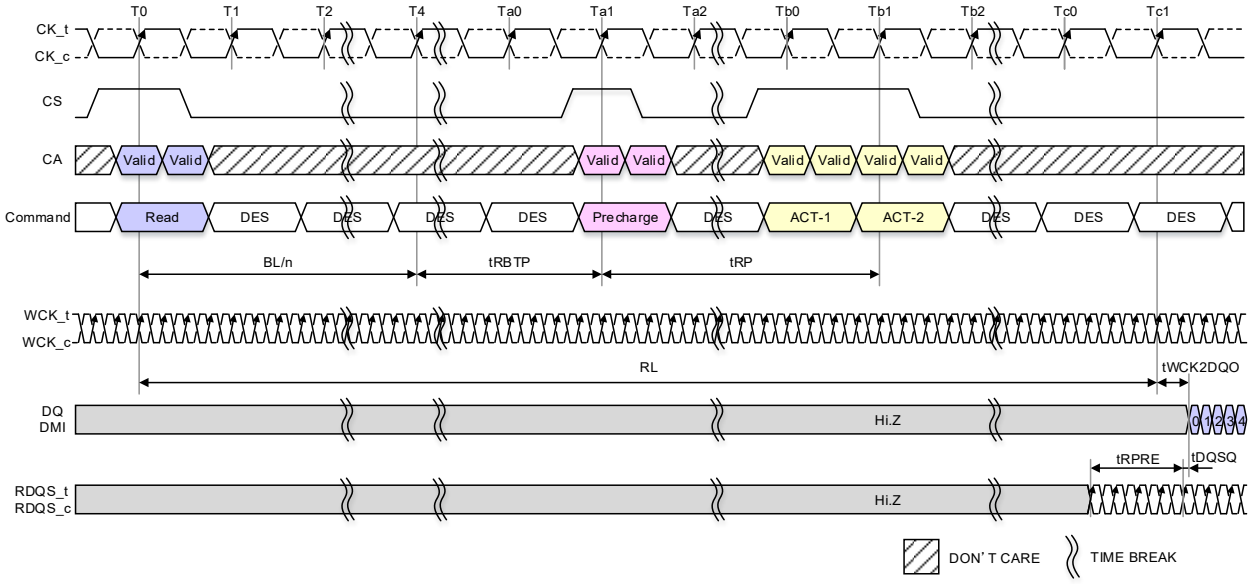

NOTE 1 tWCK2CK is 0ps in this instance.
NOTE 2 DES commands are shown for ease of illustration; other commands may be valid at these times.

Figure 81 — Burst Read followed by Precharge: 16B Mode, CKR = 4:1, BL=32

LPDDR5-SDRAM devices write data to the memory array in prefetch multiples. An internal Write operation can only begin after a prefetch group has been clocked, so tWR starts at the prefetch boundaries. The minimum Write-to-Precharge time for commands to the same bank is WL + BL/n + 1 + tWR clock cycles when bank organization is 16B mode. Refer to 8.1.1 for the command constraints table for other modes (BG and 8B mode).

7.3.2.1 Pre-Charge Operation (Cont'd)

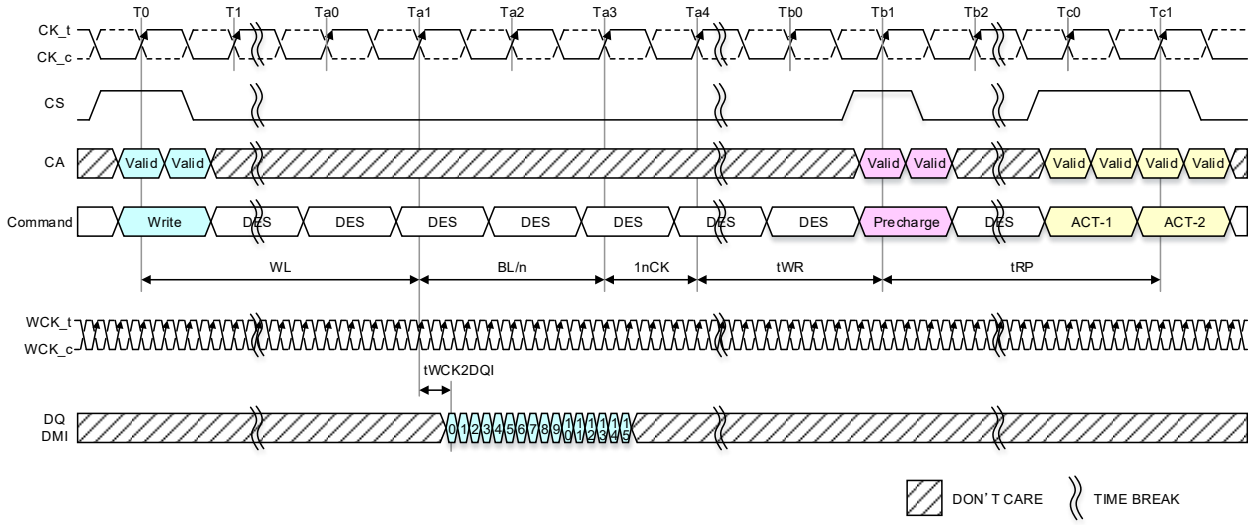

NOTE 1 tWCK2CK is 0ps in this instance.
NOTE 2 tWR starts at the rising edge of CK_t after WL + BL/n + 1nCK from Write command.
NOTE 3 DES commands are shown for ease of illustration; other commands may be valid at these times.

Figure 82 — Burst Write Followed by Precharge: 16B Mode, CKR = 4:1, BL=16

7.3.2.2 Auto-Precharge Operation

When a Read, Write, or Masked Write command is issued to the device, the AP bit (CA6) can be set to enable the activated bank to automatically begin Precharge at the earliest possible moment during the burst Read, Write or Masked Write cycle.

If AP is LOW when the Read, Write and Masked Write command is issued, then the normal Read, Write, or Masked Write burst operation is executed and the bank remains activated at the completion of the burst.

If AP is HIGH when the Read, Write, or Masked Write command is issued, the Auto-Precharge function is engaged. This feature enables the Precharge operation to be partially or completely hidden during burst Read cycles (dependent upon Read or Write latency), thus improving system performance for random data access. Read with Auto Precharge or Write/Mask Write with Auto Precharge commands may be issued after tRCD has been satisfied. The LPDDR5 SDRAM RAS Lockout feature will schedule the internal Precharge to assure that tRAS is satisfied.

tRC needs to be satisfied prior to issuing subsequent Activate commands to the same bank. Figure 83 shows example of RAS lock function.

7.3.2.2 Auto-Precharge Operation (Cont'd)

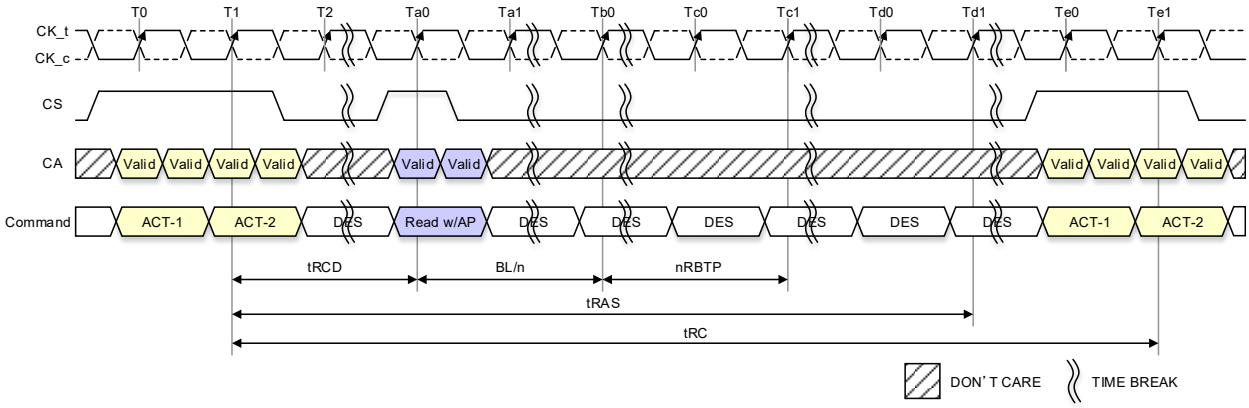

NOTE 1 DES commands are shown for ease of illustration; other commands may be valid at these times.

Figure 83 — Command Input Timing with RAS lock

7.3.2.2.1 Delay time from Write to Read with Auto Precharge

In the case of write command followed by Read with auto-Precharge, the controller must satisfy tWR for the write command before initiating the SDRAM internal auto-Precharge. This means that (tWTR + BL/n + nRBTP) should be equal or longer than (tWR) when SDRAM bank organization is 16B. Refer to 8.1.1 for the command constraints table for other modes (BG and 8B mode). Refer to the following figure for details.

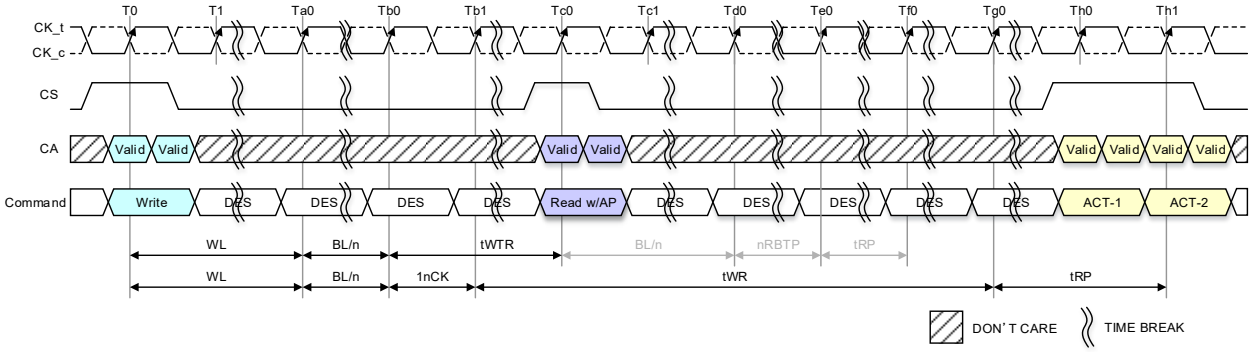

NOTE 1 tWTR starts at the rising edge of CK_t after WL + BL/n from Write command.
NOTE 2 DES commands are shown for ease of illustration; other commands may be valid at these times.

Figure 84 — Delay time from Write to Read with Auto Precharge: 16B mode

7.3.2.2.2 Burst Read with Auto-Precharge

If AP is HIGH when a Read command is issued, the Read with Auto-Precharge function is engaged. An internal Precharge procedure starts a following delay time after the Read command. The delay time depends on the bank organization.

Refer to 8.1.1 for the command constraints table for actual delay time from Read with Auto-Precharge.

For LPDDR5 Auto-Precharge calculations, see able 190. Following an Auto-Precharge operation, an Activate command can be issued to the same bank if the following two conditions are both satisfied:

a. The RAS Precharge time (tRP) has been satisfied from the clock at which the Auto-Precharge began, or
b. The RAS cycle time (tRC) from the previous bank activation has been satisfied.

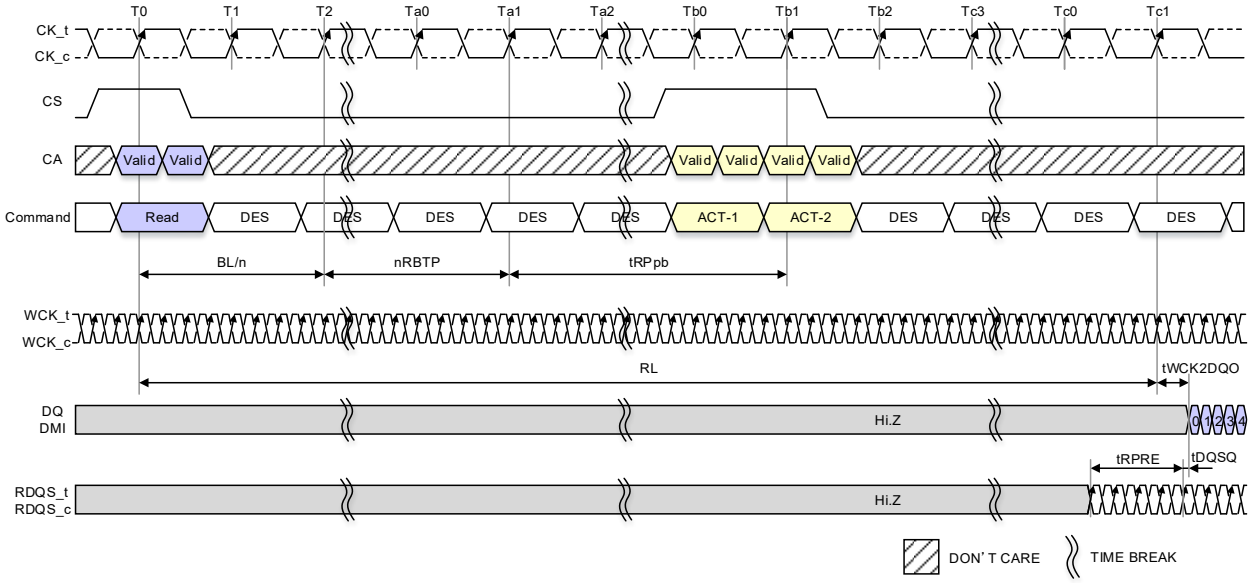

NOTE 1 DES commands are shown for ease of illustration; other commands may be valid at these times.

Figure 85 — Burst Read with Auto-Precharge: 16B mode

7.3.2.2.3 Burst Write with Auto-Precharge

If AP is HIGH when a Write command is issued, the Write with Auto-Precharge function is engaged. The device starts an Auto-Precharge on the rising edge nWR cycles after the completion of the Burst Write.

Following a Write with Auto-Precharge, an Activate command can be issued to the same bank if the following conditions are met:

a. The RAS Precharge time (tRP) has been satisfied from the clock at which the Auto-Precharge began, and
b. The RAS cycle time (tRC) from the previous bank activation has been satisfied.

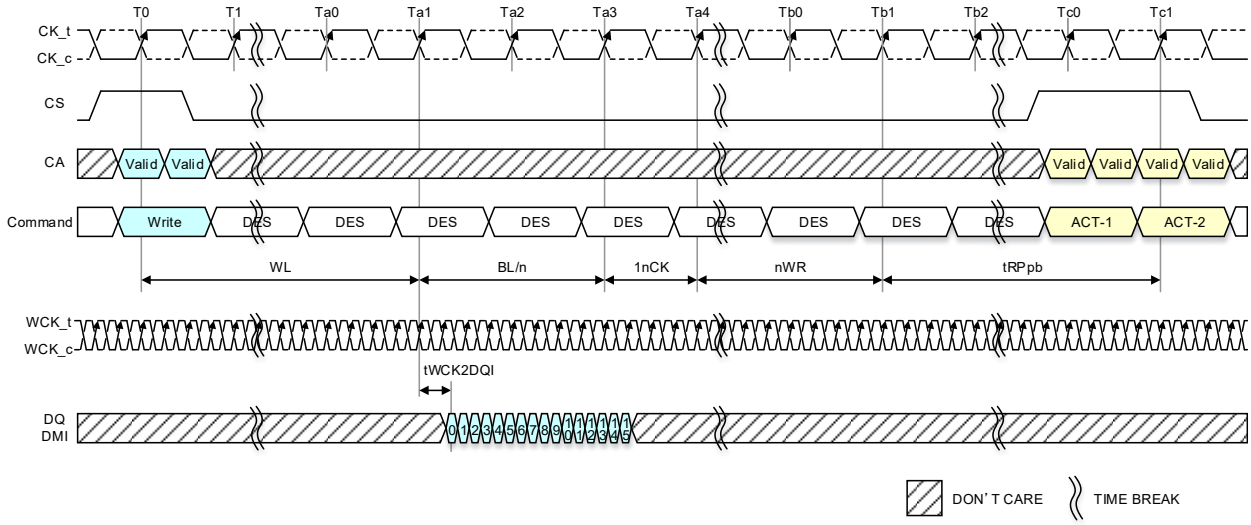

NOTE 1 DES commands are shown for ease of illustration; other commands may be valid at these times.

Figure 86 — Burst Write with Auto- Precharge: 16B mode

7.3.2.2.3 Burst Write with Auto-Precharge (Cont'd)

able 190 — Timing Between Commands (PRECHARGE and Auto-PRECHARGE) : DQ ODT is Disable

From Command	To Command	Minimum Delay between "From Command" and "To Command"	Unit	Notes
READ BL=32 BG mode	PER BANK REFRESH (to same bank as Read)	illegal	-	
	ALL BANK REFRESH	illegal	-	
READ BL = 16 BG mode BL = 16 16Bank mode BL=32 8Bank mode	PER BANK REFRESH (to same bank as Read)	illegal	-	
	ALL BANK REFRESH	illegal	-	
WRITE BL=16 & 32	PER BANK REFRESH (to same bank as Write)	illegal	tCK	
	ALL BANK REFRESH	illegal	tCK	
MASK-WR BL = 16 BG mode BL = 16 16Bank mode BL=32 8Bank mode	PER BANK REFRESH (to same bank as MAK-WR)	illegal	tCK	
	ALL BANK REFRESH	illegal	tCK	

7.4 Read/Write Operation

7.4.1 Read and Write Access Operations

TBD

7.4.2 Read Preamble and Postamble

TBD

7.4.3 Burst Read Operation

An LPDDR5 SDRAM requires to be in WCK2CK synchronization state before internal read operation starts. For read operations, WCK must be driven at least tWCKPRE_Static+tWCKPRE_Toggle_RD before the read DQ burst. LPDDR5 will have a WCK post-amble following MR10 OP[3:2], after completing all read DQ burst.

7.4.3.1 Read Timing

A read command is initiated with CS, and CA[6:0] asserted to the proper state at the rising and falling edges of CK, as defined by the Command Truth Table, **Table 178**. Read burst order is controlled by only one burst order bit, B3, at BL16 mode making the starting column burst address be a multiple of eight (ex. 0x0 or 0x8). The read latency (RL) is defined from the rising edge of the clock that starts a read command to the rising edge of the clock from which tWCKDQO is measured. The first valid data is available of RL * tCK + tWCK2CK + tWCKDQO after the clock rising edge of a read command. WCK is driven by DRAM controller tWCKPRE_Static+tWCKPRE_Toggle_RD before the first valid read data starts. The tWCKPRE_Static+tWCKPRE_Toggle_RD is dependent on operating frequency and the value is summarized in Table 182. The DQ-data is valid for tQW (DQ output window) and the controller must periodically train its internal capture clock to stay centered in the tQW window to compensate for timing changes due to temperature and voltage variation. Burst data is captured by the controller on successive edges of WCK until the 16 or 32 bit data burst is complete. The WCK must remain active (toggling) for tWCKPST (WCK post-amble) after the completion of the burst read. After a burst READ operation, tRBTP must be satisfied before a PRECHARGE command to the same bank can be issued. Pin timings are measured relative to the cross point of WCK_t and WCK_c.

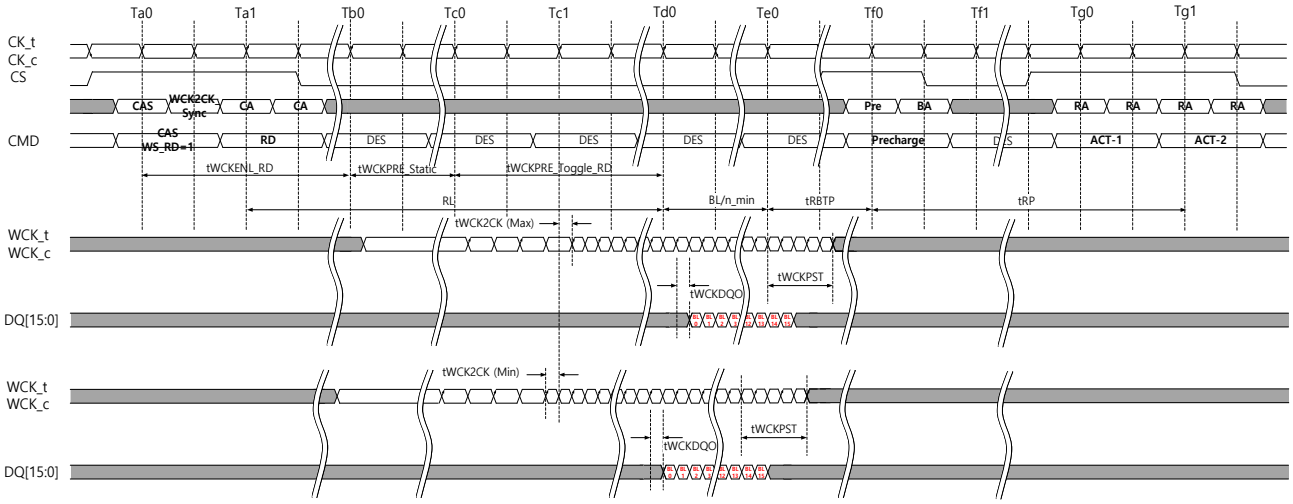

Figure 87 - Burst Read Operation

7.4.3.2 Read to Read Operation without additional WCK2CK-sync

Figure 88 shows timing diagram of back to back read operation with BL/n_min. The CAS command with WCK2CK-sync is issued before the first read command, making the DRAM in WCK2CK-sync state. Only one CAS command with WCK2CK-sync before the first read command is required, because the WCK2CK-sync state continues until RL + BL/n_max + RD(tWCKPST/tCK).

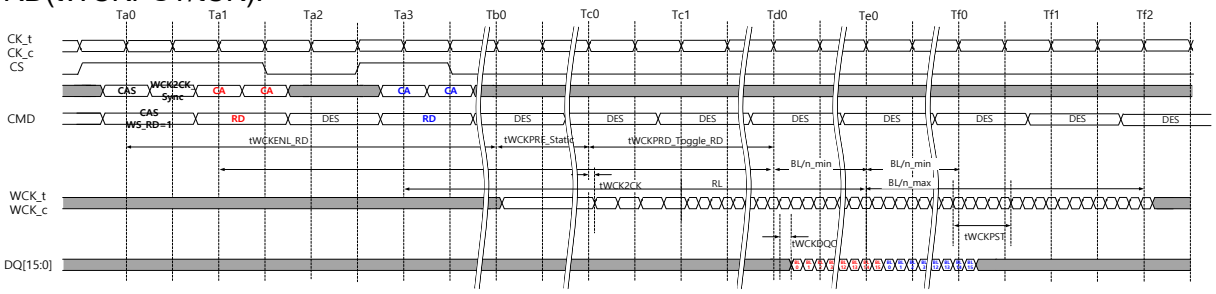

Figure 88 - Back to back read operation with BL/n_min, BG mode, WCK:CK = 4:1, tWCKPST = 2.5tWCK

When command gap between two read commands is larger than BL/n_min, second read command can be issued without additional CAS command with WCK2CK-sync until RL + BL/n_max + RD(tWCKPST/tCK). In Figure 89, if the second read command is given before Tf2, DRAM is still in WCK2CK-sync state, and additional CAS command with WCK2CK-sync is not required. To keep DRAM in WCK2CK-sync state, WCK is required to toggle at full-rate from Td1 to Th0+tWCKPST. The second read command also extends the duration DRAM stays in WCK2CK-sync by another RL + BL/n_max + RD(tWCKPST/tCK). Therefore additional CAS command with WCK2CK-sync will not be required if another read command is given before Th2.

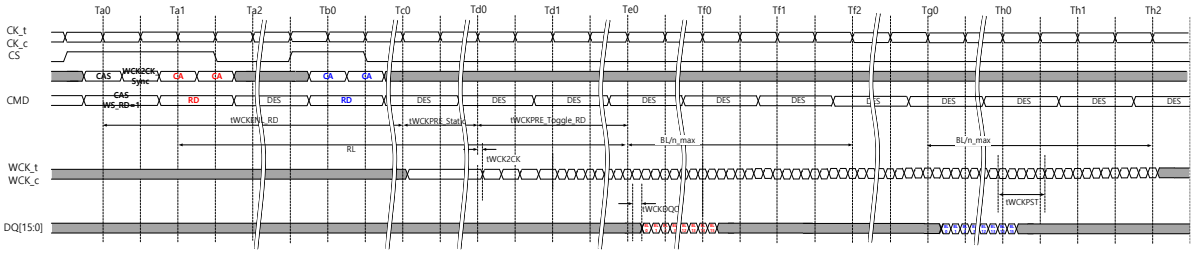

Figure 89 - Back to back read operation without additional WCK2CK sync sequence, BG mode, WCK:CK = 4:1, tWCKPST = 2.5tWCK

7.4.3.3 Read to Read Operation with additional WCK2CK-sync

When command gap between two read commands is larger than RL + BL/n_max + RD(tWCKPST/tCK), a new WCK2CK-sync sequence is required. Figure 90 shows the case when the command gap between two read commands are larger than RL + BL/n_max + RD(tWCKPST/tCK). In this case a new CAS command with WCK2CK_Sync=1 at Td2 for next read command is required.

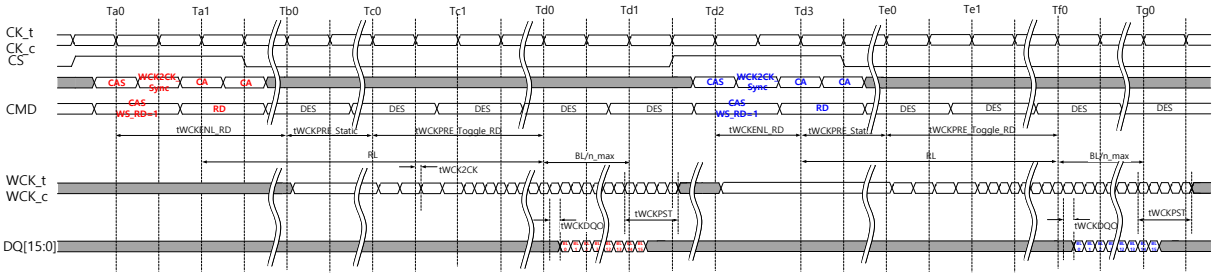

Figure 90 - Back to back read operation requiring a new WCK2CK-sync sequence (16B mode, WCK:CK = 4:1, tWCKPST = 2.5tWCK)

7.4.3.4 Read operation followed by write operation

If a write command following a read command is issued before RL + BL/n_max + RD(tWCKPST/tCK) from the previous command, additional CAS command with WCK2CK-sync is not required and WCK must keep toggle at its full-rate until the write DQ operation is completed and tWCKPST is satisfied. This case is shown in Figure 91.

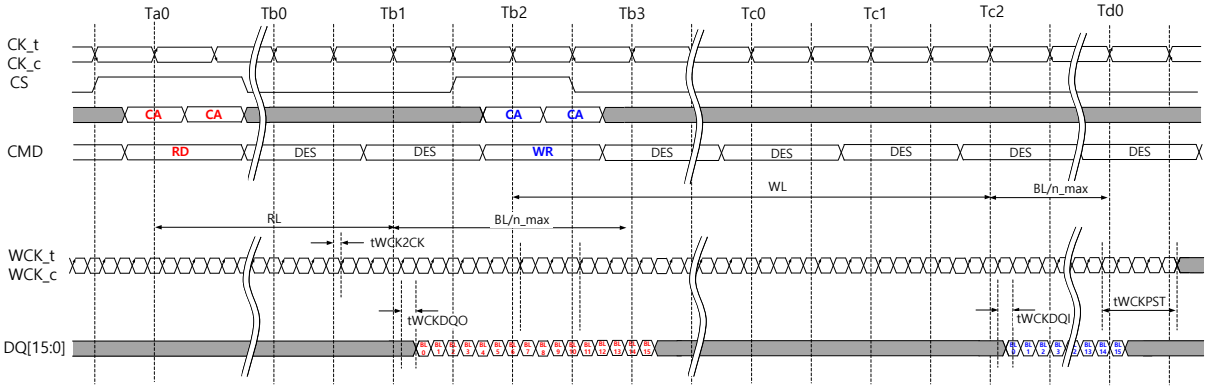

Figure 91 - Read operation followed by write operation without additional WCK2CK-sync sequence (16B mode, WCK:CK = 4:1, tWCKPST = 2.5tWCK)

However, an additional WCK2CK-sync sequence is required if the command gap is larger than RL + BL/n_max + RD(tWCKPST/tCK) because WCK2CK-sync state expires. In this case a CAS command with WCK2CK_Sync=1 must be given before the following write command as shown in Figure 92.

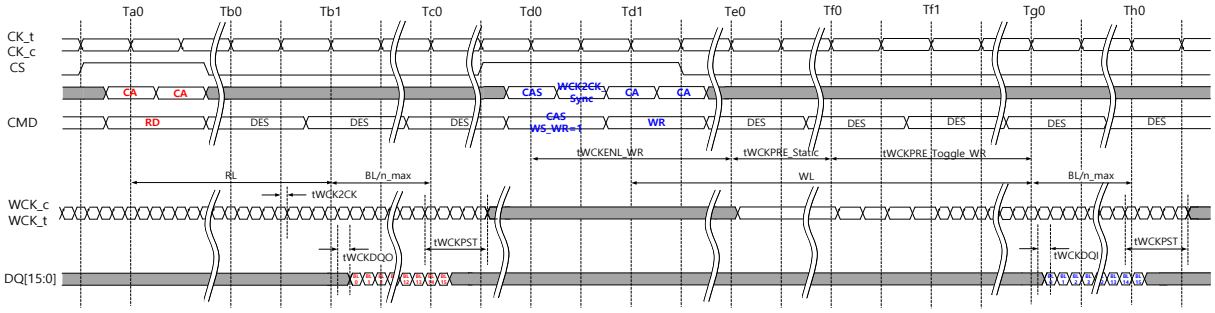

Figure 92 - Read operation followed by write operation with additional WCK2CK-sync sequence (16B mode, WCK:CK=4:1, tWCKPST=2.5tWCK)

7.4.4 READ Burst end to PRECHARGE Delay (tRBTP)

LPDDR5 device defines tRBTP as a delay from READ Burst end (BL/n_min from READ command) to a PRECHARGE command to specify the timing start point of tRBTP consistently over different Burst Length, WCK:CK ratio and Bank/BG mode setting.

Table 191 — Core Timing (tRBTP)

Parameter	Symbol	Min / Max	WCK:CK Ratio	WCK frequency (MHz)												Unit
				267	533	800	1067	1375	1600	1867	2134	2400	2750	3000	3200	
READ Burst end to PRECHARGE command delay	tRBTP	Min	2:1	Max(7.5ns, 4nCK) – 4nCK						N/A						ns
			4:1	Max[7.5ns, 2nCK] – 2nCK												

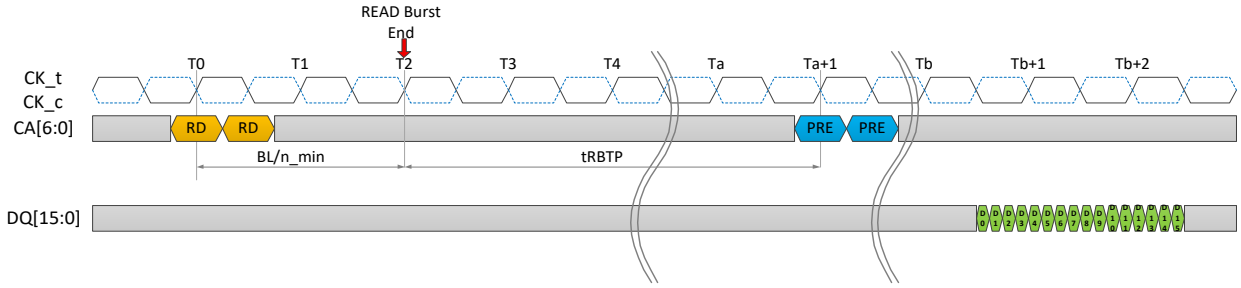

NOTE 1 WCK:CK = 4:1, BL16, BG mode
NOTE 2 BL/n_min = 2*tCK (IO speed > 3200Mbps)

Figure 93 — Example of READ burst end to PRECHARGE command delay for same banks

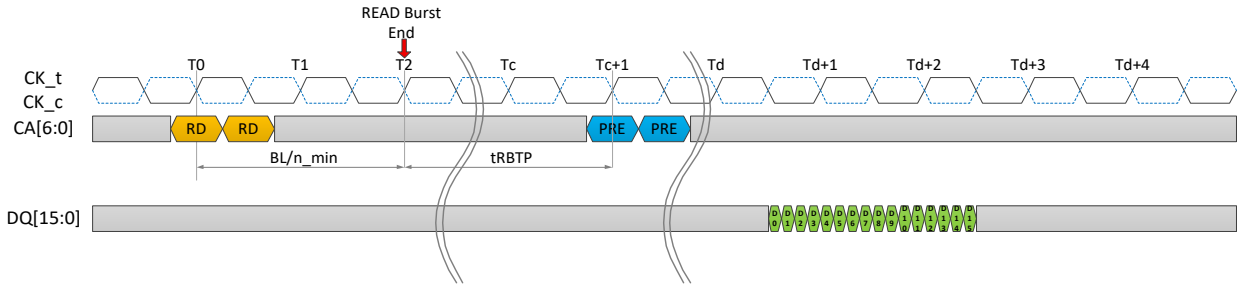

NOTE 1 WCK:CK = 4:1, BL16, 16B mode
NOTE 2 BL/n_min = 2*tCK (IO speed ≤ 3200Mbps)

Figure 94 — Example of READ burst end to PRECHARGE command delay for same banks

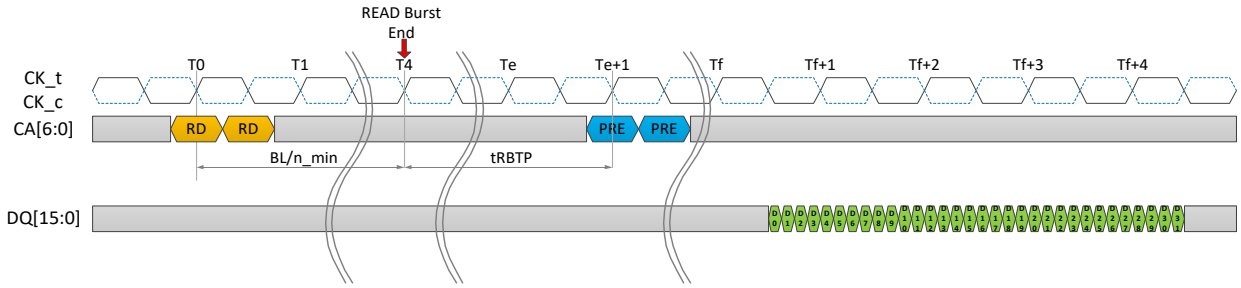

NOTE 1 WCK:CK = 4:1, BL32, 8B mode
NOTE 2 BL/n_min = 4*tCK (IO speed > 3200Mbps)

Figure 95 — Example of READ burst end to PRECHARGE command delay for same banks

7.4.4 READ Burst end to PRECHARGE Delay (tRBTP) (Cont'd)

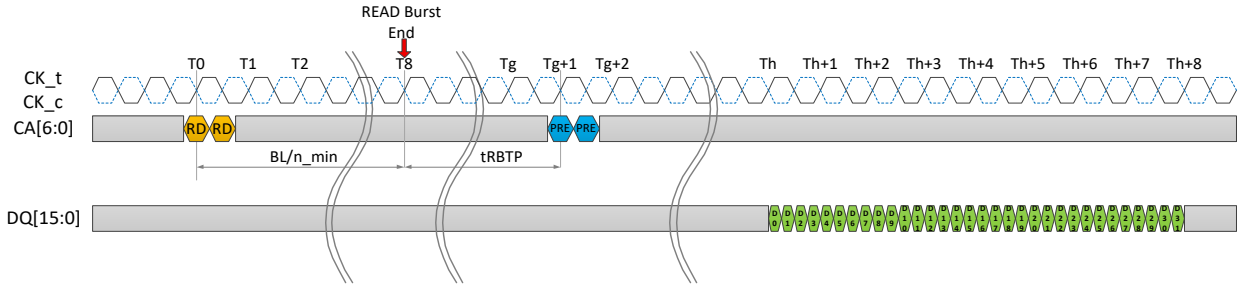

NOTE WCK:CK = 2:1, BL32, 16B mode
NOTE BL/n_min = 8*tCK (IO speed ≤ 3200Mbps)

Figure 96 — Example of READ burst end to PRECHARGE command delay for same banks

7.4.5 RDQS Mode

For device operation at high clock frequencies, LPDDR5 may be set into RDQS mode in which a READ DATA STROBE (or a pair of READ DATA STROBE) will be sent on RDQS_c pin and RDQS_t pin along with the READ data. SoC will use a single-ended RDQS or a differential RDQS to latch the READ data.

7.4.5.1 RDQS Timing

Read timing with RDQS mode enabled is shown in **Figure 97**. Except the additional RDQS timing, all the timings are same as those of READ operation (7.4.3). RDQS-related parameters, tDQSQ, tRPRE and tRPST are defined in Table 192.

RDQS is assumed as a differential pair, RDQS_t and RDQS_c in **Figure 97**.

The read latency (RL) is defined from the rising edge of the clock that starts a read command to the rising edge of the clock from which tWCKDQO is measured. The first valid data is available for RL*tCK + tWCK2CK + tWCKDQO after the clock rising edge of a read command.

The first latching edge of RDQS will start later than the first valid data with "tDQSQ" delay and tDQSQ is a known parameter in LPDDR4.

RDQS requires a pre-amble prior at the first latching edge (the rising edge of RDQS with the first valid data), and it requires a post-amble after the last latching edge. The pre-amble (tRPRE) and post-amble (tRPST) time lengths are defined as parameters can be set via mode register writes (MRW). tRPRE and tRPST are assumed 2tWCK in
Figure **97**, and the specific number is TBD.

7.4.5.1 RDQS Mode (Cont'd)

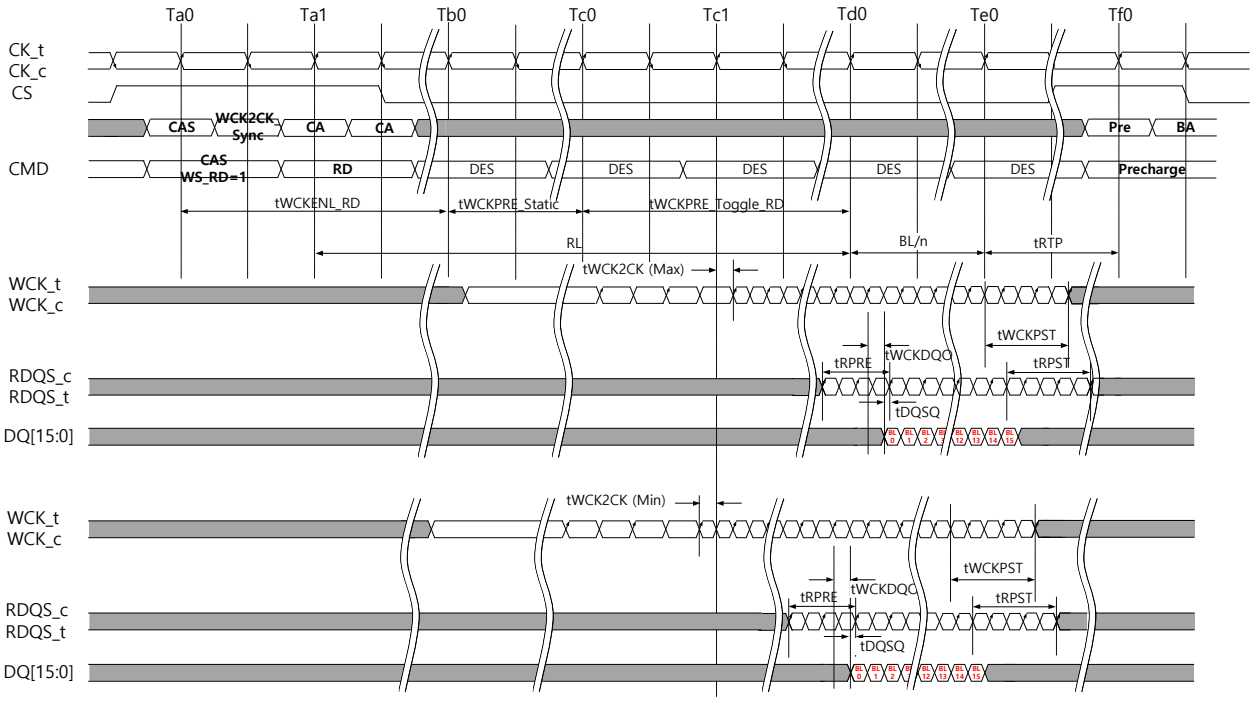

Figure 97 — Read timing with RDQS and related timing parameters

7.4.5.2 RDQS Related Functionalities

LPDDR5 supports both a single-ended RDQS and a differential RDQS to help SoC to optimize power and performance. RDQS configuration is selected via mode register writes (MRW).

RDQS_t is used to send a read data strobe in a single-ended RDQS mode. RDQS_c and RDQS_t are used to send read data strobes in a differential RDQS mode.

The examples of RDQS settings are shown in **Figure 98**. There can be two cases as shown in Figure 100.

7.4.5.2 RDQS Related Functionalities (Cont'd)

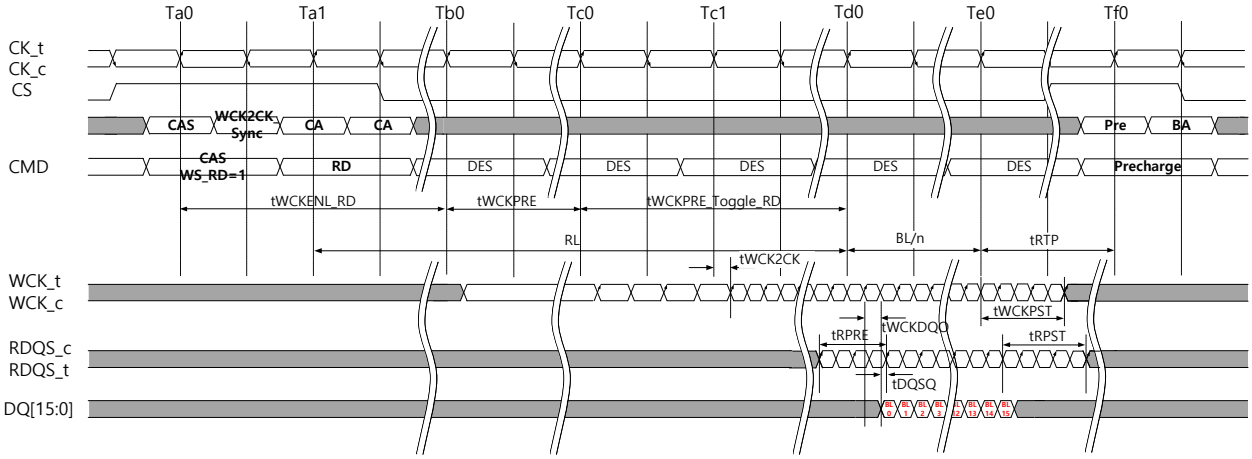

CASE 1. Differential and Full-rate RDQS

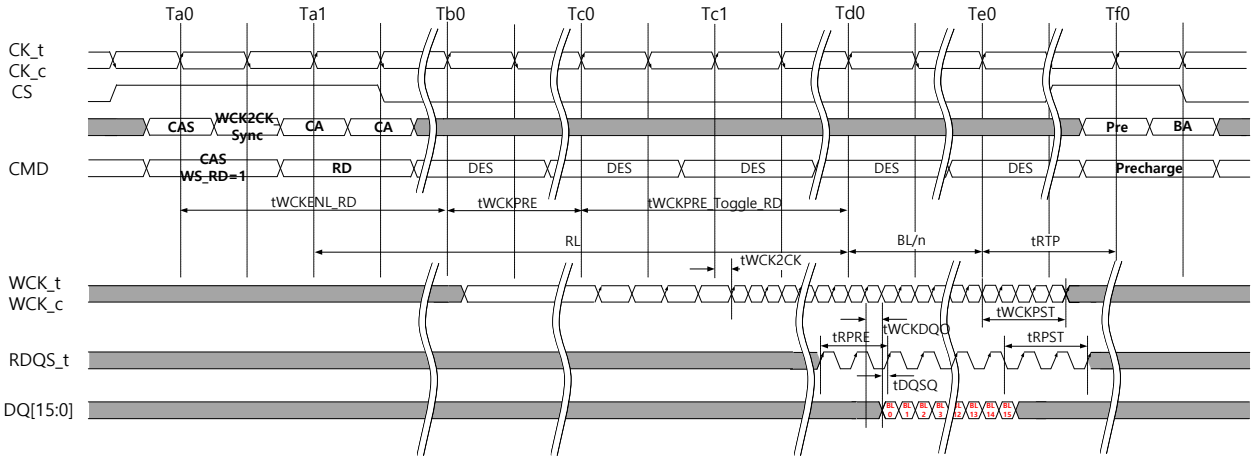

CASE 2. Single-ended and Full-rate RDQS

Figure 98 — 4 All the possible types of RDQS

7.4.5.3 Mode Registers for RDQS

The length of RDQS pre-amble and post-amble can be determined by MR10 OP[4:7]. The specific number is TBD.

RDQS mode configuration can also be changed by MR20 OP[1:0]. When OP[1:0]=00 at MR20, RDQS mode will not be supported and SOC should latch the read data with its own internal clock. Single-ended RDQS mode and differential RDQS mode can be selected by setting OP[1:0] to 01, 10 and 11 each.

7.4.5.3 Mode Registers for RDQS (Cont'd)

Table 192 — RDQS Timing Parameters

Parameters	Symbol	Min/ Max	Value	Unit	Note
READ preamble	tRPRE	Min	TBD	tWCK	
READ postamble	tRPST	Min	TBD	tWCK	
RDQS_c low impedance time from CK_t, CK_c	tLZ(DQS)	Min	TBD	ps	
RDQS_c high impedance time from CK_t, CK_c	tHZ(DQS)	Max	TBD	ps	
RDQS-DQ skew	tDQSQ	Max	TBD	ps	

7.4.5.4 RDQS Pattern Definition

LPDDR5 device requires MR20 OP[1:0] non zero to enable RDQS operation. The RDQS strobe provides a pre-amble pattern prior to the first latching edge (the rising edge of RDQS with data valid), and it also provides a post-amble pattern after the last latching edge. The pre-amble and post-amble length and type are set to MR10 via Mode Register Write commands. In Read to Read operations with BL/n, post-amble for 1st Read command and preamble for 2nd Read command will disappear to create consecutive RDQS latching edge for seamless burst operations. But in the case of Read to Read operations with command interval of BL/n + k*nCK, they will not completely disappear because it's not seamless burst operations. Timing diagrams and RDQS pattern definition tables in this material describe RDQS post-amble and pre-amble merging behavior in Read to Read operations with BL/n + k*nCK.

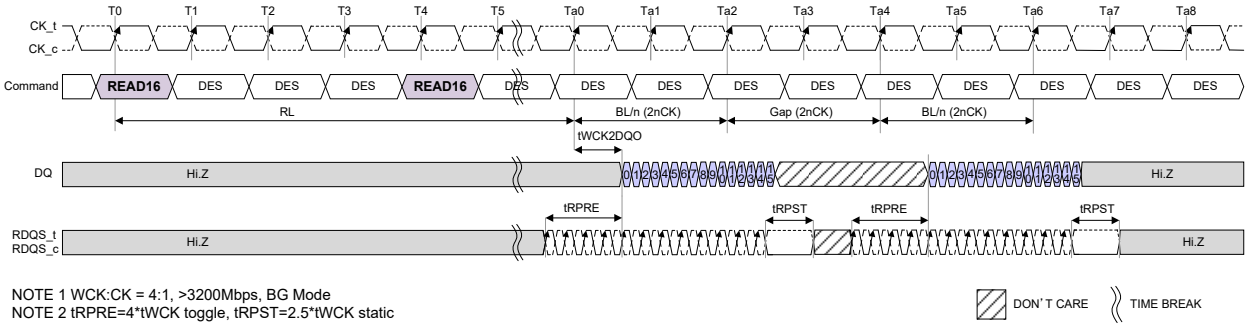

Figure 99 — READ16 to READ16 2nCK Gap Operation: CKR (WCK vs. CK) = 4:1, tRPST=2.5nWCK

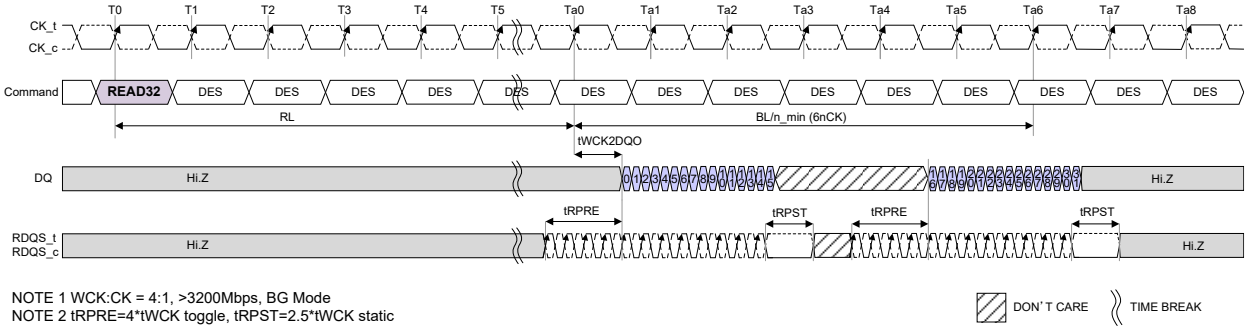

Figure 100 — BG Mode Read32 Operation: CKR (WCK vs. CK) = 4:1, tRPST=2.5nWCK

7.4.5.4 RDQS Pattern Definition (Cont'd)

Table 193 — RDQS Pattern Definition in case READ to READ command timing is BL/n + k*nCK (k=1, 2)

RDQS PST MR10 OP[0] & OP[7:6]	RDQS PRE MR10 OP[5:4]	1nCK(4nWCK) Gap WCK Cycle Number				2nCK(8nWCK) Gap WCK Cycle Number							
		1	2	3	4	1	2	3	4	5	6	7	8
4.5*tWCK Static	tRDQS_PRE + 4*tWCK Toggle	T	T	T	T	S	S	S	S	T	T	T	T
	4*tWCK Toggle	T	T	T	T	S	S	S	S	T	T	T	T
	2*tWCK Static + 2*tWCK Toggle	S	S	T	T	S	S	S	S	S	S	T	T
	4*tWCK Static	S	S	S	S	S	S	S	S	S	S	S	S
2.5*tWCK Static	tRDQS_PRE + 4*tWCK Toggle	T	T	T	T	S	S	S	S	T	T	T	T
	4*tWCK Toggle	T	T	T	T	S	S	X	X	T	T	T	T
	2*tWCK Static + 2*tWCK Toggle	S	S	T	T	S	S	X	X	S	S	T	T
	4*tWCK Static	S	S	S	S	S	S	X	X	S	S	S	S
0.5*tWCK Static	tRDQS_PRE + 4*tWCK Toggle	T	T	T	T	X	X	S	S	T	T	T	T
	4*tWCK Toggle	T	T	T	T	X	X	X	X	T	T	T	T
	2*tWCK Static + 2*tWCK Toggle	S	S	T	T	X	X	X	X	S	S	T	T
	4*tWCK Static	S	S	S	S	X	X	X	X	S	S	S	S
4.5*tWCK Toggle	tRDQS_PRE + 4*tWCK Toggle	T	T	T	T	T	T	T	T	T	T	T	T
	4*tWCK Toggle	T	T	T	T	T	T	T	T	T	T	T	T
	2*tWCK Static + 2*tWCK Toggle	T	T	T	T	T	T	T	T	S	S	T	T
	4*tWCK Static	T	T	T	T	T	T	T	T	S	S	S	S
2.5*tWCK Toggle	tRDQS_PRE + 4*tWCK Toggle	T	T	T	T	T	T	S	S	T	T	T	T
	4*tWCK Toggle	T	T	T	T	T	T	X	X	T	T	T	T
	2*tWCK Static + 2*tWCK Toggle	T	T	T	T	T	T	X	X	S	S	T	T
	4*tWCK Static	T	T	S	S	T	T	X	X	S	S	S	S
0.5*tWCK Toggle	tRDQS_PRE + 4*tWCK Toggle	T	T	T	T	X	X	S	S	T	T	T	T
	4*tWCK Toggle	T	T	T	T	X	X	X	X	T	T	T	T
	2*tWCK Static + 2*tWCK Toggle	S	S	T	T	X	X	X	X	S	S	T	T
	4*tWCK Static	S	S	S	S	X	X	X	X	S	S	S	S

NOTE 1 RDQS pattern abbreviation: S(Static), T(Toggle), X(Don't Care).
NOTE 2 CKR(WCK:CK) is 4:1.
NOTE 3 MR10 OP[5:4]=11B (tRDQS_PRE + 4*tWCK Toggle) can be supported over 3200Mbps operation.

7.4.5.4 RDQS Pattern Definition (Cont'd)

Table 194 — RDQS Pattern Definition in case READ to READ command timing delay is BL/n + k*nCK (k=1, 2, 3)

RDQS PST MR10 OP[0] & OP[7:6]	RDQS PRE MR10 OP[5:4]	1nCK(2nWCK) Gap		2nCK(4nWCK) Gap				3nCK(6nWCK) Gap					
		WCK Cycle Number		WCK Cycle Number				WCK Cycle Number					
		1	2	1	2	3	4	1	2	3	4	5	6
4.5*tWCK Static	4*tWCK Toggle	T	T	T	T	T	T	S	S	T	T	T	T
	2*tWCK Static + 2*tWCK Toggle	T	T	S	S	T	T	S	S	S	S	T	T
	4*tWCK Static	S	S	S	S	S	S	S	S	S	S	S	S
2.5*tWCK Static	4*tWCK Toggle	T	T	T	T	T	T	S	S	T	T	T	T
	2*tWCK Static + 2*tWCK Toggle	T	T	S	S	T	T	S	S	S	S	T	T
	4*tWCK Static	S	S	S	S	S	S	S	S	S	S	S	S
0.5*tWCK Static	4*tWCK Toggle	T	T	T	T	T	T	X	X	T	T	T	T
	2*tWCK Static + 2*tWCK Toggle	T	T	S	S	T	T	X	X	S	S	T	T
	4*tWCK Static	S	S	S	S	S	S	X	X	S	S	S	S
4.5*tWCK Toggle	4*tWCK Toggle	T	T	T	T	T	T	T	T	T	T	T	T
	2*tWCK Static + 2*tWCK Toggle	T	T	T	T	T	T	T	T	T	T	T	T
	4*tWCK Static	T	T	T	T	T	T	T	T	T	T	S	S
2.5*tWCK Toggle	4*tWCK Toggle	T	T	T	T	T	T	T	T	T	T	T	T
	2*tWCK Static + 2*tWCK Toggle	T	T	T	T	T	T	T	T	S	S	T	T
	4*tWCK Static	T	T	T	T	S	S	T	T	S	S	S	S
0.5*tWCK Toggle	4*tWCK Toggle	T	T	T	T	T	T	X	X	T	T	T	T
	2*tWCK Static + 2*tWCK Toggle	T	T	S	S	T	T	X	X	S	S	T	T
	4*tWCK Static	S	S	S	S	S	S	X	X	S	S	S	S

NOTE 1 RDQS pattern abbreviation: S(Static), T(Toggle), X(Don't Care).
NOTE 2 CKR(WCK:CK) is 2:1.

7.4.6 Write Preamble and Postamble

TBD

7.4.7 Burst Write Operation

An LPDDR5 SDRAM requires to be in WCK2CK synchronization state before the internal write operation starts. For WRITE operations, WCK must be driven at least tWCKPRE_Static + tWCKPRE_Toggle_WR before the write DQ burst. LPDDR5 will have a WCK post-amble following MR10 OP[3:2] after completing all write DQ burst.

7.4.7.1 Write Timing

A WRITE command is initiated with CS, and CA[6:0] asserted to the proper state at the rising and falling edges of CK, as defined by the Command Truth Table. LPDDR5 write command does not support burst ordering, so that the starting column burst address is always aligned with a 32B boundary. The write latency (WL) is defined from the rising edge of the clock that starts a write command to the rising edge of the clock from which tWCKDQI is measured. The first valid “latching” edge of WCK must be driven WL * tCK + tWCK2CK after the rising edge of clock that completes a write command. The LPDDR5-SDRAM uses an un-matched WCK-DQ path for lower power, so the WCK must arrive at the SDRAM ball prior to the DQ signal by the amount of tWCKDQI. WCK is driven by DRAM controller tWCKPRE_Static+tWCKPRE_Toggle_WR before the first valid rising strobe edge. The tWCKPRE_Static+tWCKPRE_Toggle_WR dependent on operating frequency and the amount is summarized in Table 182. The WCK must be trained to arrive at the DQ pad center-aligned with the DQ-data. The DQ-data must be held for tDIVW (data input valid window) and the WCK must be periodically trained to stay centered in the tDIVW window to compensate for timing changes due to temperature and voltage variation. Burst data is captured by the SDRAM on successive edges of WCK until the 16 or 32 bit data burst is complete. The WCK must remain active (toggling) for tWCKPST (WCK post-amble) after the completion of the burst WRITE. After a burst WRITE operation, tWR must be satisfied before a PRECHARGE command to the same bank can be issued. Pin input timings are measured relative to the crosspoint of WCK_t and WCK_c.

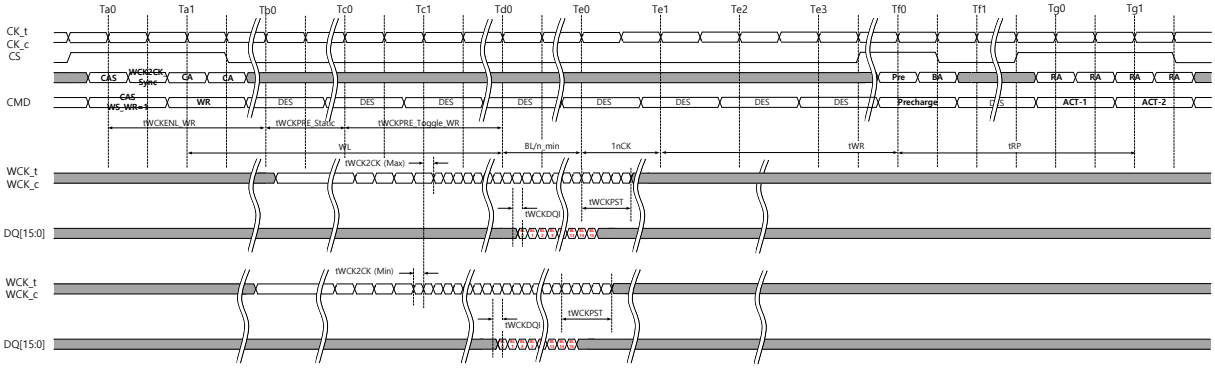

Figure 101 - Burst Write Operation

7.4.7.2 Write to Write Operation without additional WCK2CK-sync

Figure 102 shows timing diagram of back to back write operation with BL/n_min. The CAS command with WCK2CK-sync is issued before the first write command, making the DRAM in WCK2CK-sync state. Only one CAS WCK2CK-sync command before the first write command is required, because the WCK2CK-sync state continues until WL + BL/n_max + RD(tWCKPST/tCK).

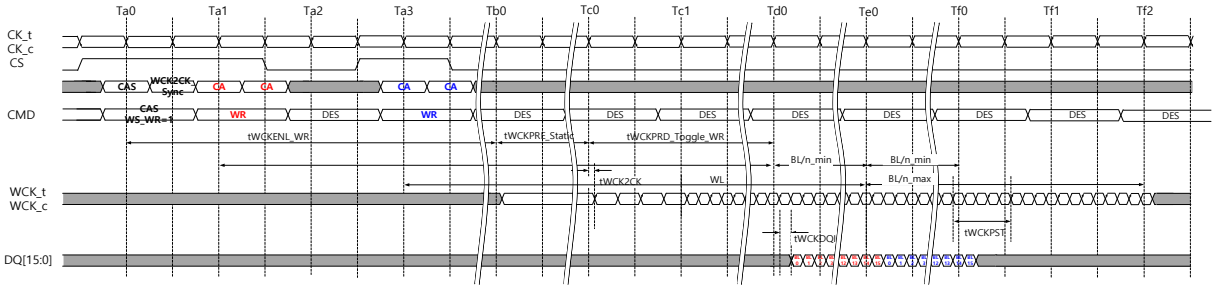

Figure 102 - Back to back write operation with BL/n_min, BG mode, WCK:CK = 4:1, tWCKPST=2.5tWCK

When the command gap between two write commands is larger than BL/n_min, second write command can be issued without additional WCK2CK-sync command until WL + BL/n_max + RD(tWCKPST/tCK). In Figure 103, if the second write command is given before Tf2, DRAM is still in WCK2CK-sync state, and additional CAS command with WCK2CK-sync is not required. To keep DRAM in WCK2CK-sync state, WCK is required to toggle at full-rate from Td1 to Th0+tWCKPST. The second write command also extends the duration DRAM stays in WCK2CK-sync by another WL + BL/n_max + RD(tWCKPST/tCK) . Therefore additional CAS command with WCK2CK-sync will not be required if another write command is given before Th2.

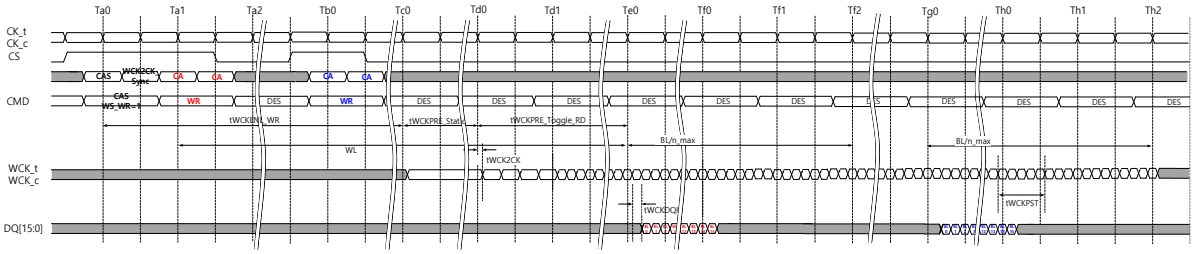

Figure 103 - Back to back write operation without additional WCK2CK sync sequence, BG mode, WCK:CK = 4:1, tWCKPST = 2.5tWCK

7.4.7.3 Write to Write Operation with additional WCK2CK-sync

When the command gap between two write commands is larger than WL + BL/n_max + RD(tWCKPST/tCK), a new WCK2CK synchronization sequence is required. Figure 104 show the case when the command gap between two write commands are larger than WL + BL/n_max + RD(tWCKPST/tCK). In this case a new CAS command with WCK2CK_Sync=1 at Td2 for next write command.

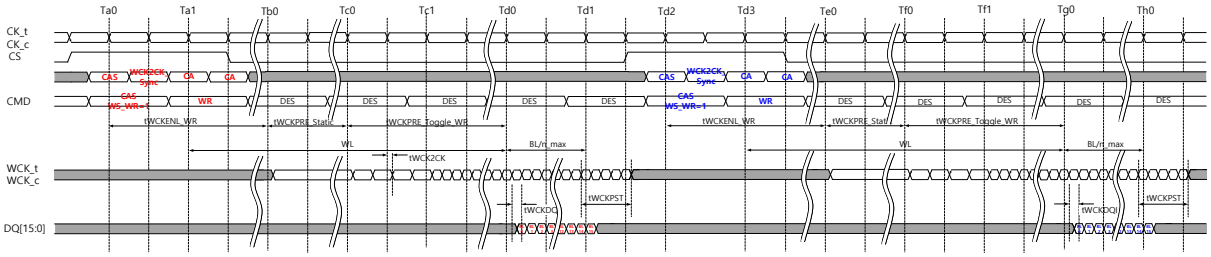

Figure 104 - Back to back write operation requiring a new WCK2CK-sync sequence (16B mode, WCK:CK = 4:1, tWCKPST = 2.5tWCK)

7.4.7.4 Write operation followed by read operation

When a read command follows a write command, the minimum gap between two commands is defined as min(tWTR). tWTR is measured from the rising clock edge that satisfies WL + BL/n in 16B mode and 8Bank mode. tWTR_L (Same BG) / tWTR_S (Different BG) is measured from the rising clock edge that satisfies WL + BL/n_max (Same BG) / WL + BL/n_min (Different BG) respectively after a write command to the following read command. Therefore, an LPDDR5 DRAM always loses WCK2CK-sync information in write to read turn around, requiring a new WCK2CK synchronization sequence for the following write command. Figure 105Figure X5 illustrates this case.

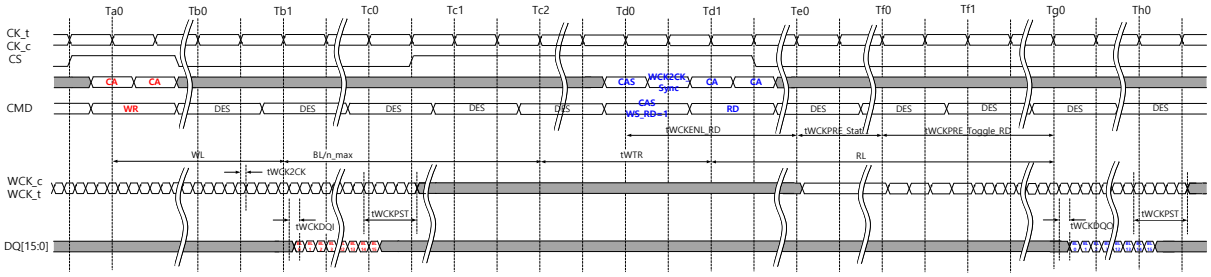

Figure 105 - Write operation followed by read operation with additional WCK2CK-sync sequence (16B mode, WCK:CK = 4:1, tWCKPST = 2.5tWCK)

7.4.8 Read and Write Latency

7.4.8.1 Read and Read-to-Precharge Latencies

Latencies related to Read timing are measured from the rising edge of CK_t that begins the Read command. Latencies are specified separately for the DVFSC Disabled and DVFSC Enabled cases. For each MR2 OP[3:0] setting, device operation at less than the CK lower limit or higher than the CK upper limit is illegal.

Table 195 — Read Latencies for Read Link ECC off case (DVFSC disabled)

MR2 OP[3:0]	Data Rate Lower Limit (Mbps)	Data Rate Upper Limit (Mbps)	WCK:CK Ratio	Lower Clock Frequency Limit (>) (MHz)	Upper Clock Frequency Limit (<=) (MHz)	Read Latency			nRBTP [nCK]
						Set 0	Set 1	Set 2	
0000_B	40	533	2:1	10	133	6	6	6	0
0001_B	533	1067		133	267	8	8	8	0
0010_B	1067	1600		267	400	10	10	12	0
0011_B	1600	2133		400	533	12	14	14	0
0100_B	2133	2750		533	688	16	16	18	2
0101_B	2750	3200		688	800	18	20	20	2
0000_B	40	533	4:1	5	67	3	3	3	0
0001_B	533	1067		67	133	4	4	4	0
0010_B	1067	1600		133	200	5	5	6	0
0011_B	1600	2133		200	267	6	7	7	0
0100_B	2133	2750		267	344	8	8	9	1
0101_B	2750	3200		344	400	9	10	10	1
0110_B	3200	3733		400	467	10	11	12	2
0111_B	3733	4267		467	533	12	13	14	2
1000_B	4267	4800		533	600	13	14	15	3
1001_B	4800	5500		600	688	15	16	17	4
1010_B	5500	6000		688	750	16	17	19	4
1011_B	6000	6400		750	800	17	18	20	4

NOTE 1 The LPDDR5 SDRAM device should not be operated at a frequency above the upper frequency limit, or below the lower frequency limit, shown for each RL, or nRBTP value.

NOTE 2 The programmed value of nRBTP is the number of clock cycles the LPDDR5 SDRAM device uses to determine the starting point of an internal Precharge operation after a Read burst with AP(Auto Precharge). It is determined by RU(tRBTP/tCK).

NOTE 3 Some operating features can affect Read Latency:

Feature	Description
1	Byte Mode
2	Read DBI and/or Read Data Copy

RL Set 0 applies when no features are enabled.
RL Set 1 applies when one feature is enabled (1 or 2).
RL Set 2 applies when two features are enabled.

7.4.8.1 Read and Read-to-Precharge Latencies (Cont'd)

Table 196 — Read Latencies for Read Link ECC off case (DVFSC enabled)

MR2 OP[3:0]	Data Rate Lower Limit (Mbps)	Data Rate Upper Limit (Mbps)	WCK:CK Ratio	Lower Clock Frequency Limit (>) (MHz)	Upper Clock Frequency Limit (<=) (MHz)	Read Latency			nRBTP [nCK]
						Set 0	Set 1	Set 2	
0000_B	40	533	2:1	10	133	6	6	6	0
0001_B	533	1067		133	267	8	10	10	0
0010_B	1067	1600		267	400	12	12	14	0
0000_B	40	533	4:1	5	67	3	3	3	0
0001_B	533	1067		67	133	4	5	5	0
0010_B	1067	1600		133	200	6	6	7	0

NOTE 1 The LPDDR5 SDRAM device should not be operated at a frequency above the upper frequency limit, or below the lower frequency limit, shown for each RL, or nRBTP value.

NOTE 2 The programmed value of nRBTP is the number of clock cycles the LPDDR5 SDRAM device uses to determine the starting point of an internal Precharge operation after a Read burst with AP(Auto Precharge). It is determined by RU(tRBTP/tCK).

NOTE 3 Some operating features can affect Read Latency:

Feature	Description
1	Byte Mode
2	Read DBI and/or Read Data Copy

RL Set 0 applies when no features are enabled.
RL Set 1 applies when one feature is enabled (1 or 2).
RL Set 2 applies when two features are enabled.

Table 197 - Read Latencies for Read Link ECC on case (DVFSC disabled)

MR2 OP[3:0]	Data Rate Lower Limit (Mbps)	Data Rate Upper Limit (Mbps)	WCK:CK Ratio	Lower Clock Frequency Limit (>) (MHz)	Upper Clock Frequency Limit (<=) (MHz)	Read Latency		nRBTP [nCK]
						Set 0	Set 1	
0110_B	3200	3733	4:1	400	467	12	13	2
0111_B	3733	4267		467	533	13	14	2
1000_B	4267	4800		533	600	15	16	3
1001_B	4800	5500		600	688	17	18	4
1010_B	5500	6000		688	750	18	20	4
1011_B	6000	6400		750	800	19	21	4

NOTE 1 The LPDDR5 SDRAM device should not be operated at a frequency above the upper frequency limit, or below the lower frequency limit, shown for each RL, or nRBTP value.

NOTE 2 The programmed value of nRBTP is the number of clock cycles the LPDDR5 SDRAM device uses to determine the starting point of an internal Precharge operation after a Read burst with AP(Auto Precharge). It is determined by RU(tRBTP/tCK).

NOTE 3 RL Set 1 applies when the device is byte-mode.

7.4.8.2 Write Latency

Write latency is measured from the rising edge of CK_t that begins the Write command. Latencies are specified separately for the DVFSC Disabled and DVFSC Enabled cases. For each MR1 OP[7:4] setting, device operation at less than the CK lower limit or higher than the CK upper limit is illegal.

7.4.8.2 Write Latency (Cont'd)

Table 198 — Write Latency: DVFSC Disabled

MR1 OP[7:4]	WCK:CK Ratio	Data Rate Range [Mbps]		CK Frequency Range [MHz]		WL		Unit
		Lower Limit (>)	Upper Limit (≤)	Lower Limit (>)	Upper Limit (≤)	Set A	Set B	
0000	2:1	40	533	10	133	4	4	nCK
0001	2:1	533	1067	133	267	4	6	nCK
0010	2:1	1067	1600	267	400	6	8	nCK
0011	2:1	1600	2133	400	533	8	10	nCK
0100	2:1	2133	2750	533	688	8	14	nCK
0101	2:1	2750	3200	688	800	10	16	nCK
0000	4:1	40	533	5	67	2	2	nCK
0001	4:1	533	1067	67	133	2	3	nCK
0010	4:1	1067	1600	133	200	3	4	nCK
0011	4:1	1600	2133	200	267	4	5	nCK
0100	4:1	2133	2750	267	344	4	7	nCK
0101	4:1	2750	3200	344	400	5	8	nCK
0110	4:1	3200	3733	400	467	6	9	nCK
0111	4:1	3733	4267	467	533	6	11	nCK
1000	4:1	4267	4800	533	600	7	12	nCK
1001	4:1	4800	5500	600	688	8	14	nCK
1010	4:1	5500	6000	688	750	9	15	nCK
1011	4:1	6000	6400	750	800	9	16	nCK

NOTE 1 The Write Latency applies both x16 and x8 SDRAM.
NOTE 2 The Write latency applies regardless of the following function setting: (Disable/Enable) Byte Mode, Write DBI, Write Data Copy and Link ECC.
NOTE 3 Write Latency Set "A" and Set "B" is determined by MR3 OP[5]. When MR3 OP[5]=0, then Write Latency Set "A" should be used. When MR3 OP[5]=1, then Write Latency Set "B" should be used.

Table 199 — Write Latency: DVFSC Enabled

MR1 OP[7:4]	WCK:CK Ratio	Data Rate Range [Mbps]		CK Frequency Range [MHz]		WL		Unit
		Lower Limit (>)	Upper Limit (≤)	Lower Limit (>)	Upper Limit (≤)	Set A	Set B	
0000	2:1	40	533	10	133	4	4	nCK
0001	2:1	533	1067	133	267	4	6	nCK
0010	2:1	1067	1600	267	400	6	8	nCK
0000	4:1	40	533	5	67	2	2	nCK
0001	4:1	533	1067	67	133	2	3	nCK
0010	4:1	1067	1600	133	200	3	4	nCK

NOTE 1 The Write Latency applies both x16 and x8 SDRAM.
NOTE 2 The Write latency applies regardless of the following function setting: (Disable/Enable) Byte Mode, Write DBI, Write Data Copy and Link ECC.
NOTE 3 Write Latency Set "A" and Set "B" is determined by MR3 OP[5]. When MR3 OP[5]=0, then Write Latency Set "A" should be used. When MR3 OP[5]=1, then Write Latency Set "B" should be used.

7.4.8.2 Write Latency (Cont'd)

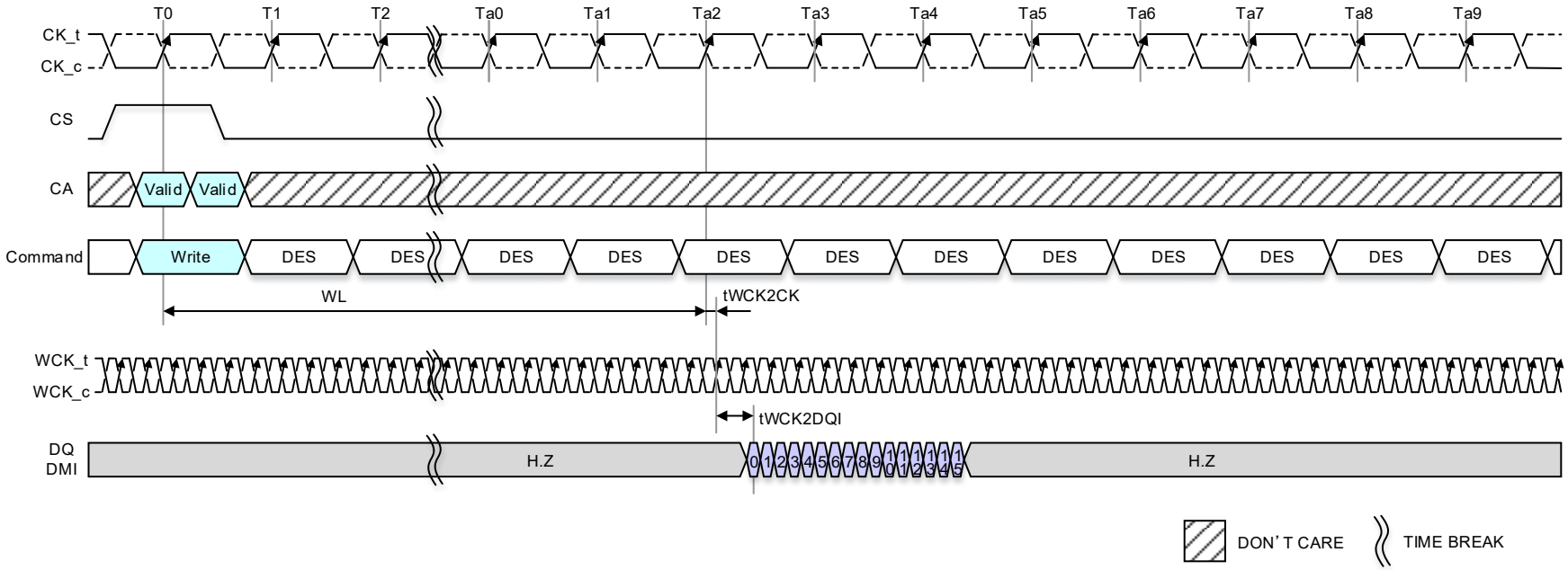

NOTE 1 DES commands are shown for ease of illustration; other commands may be valid at these times.

Figure 106 — Write Latency Timing

7.4.8.3 Write Recovery time

Write Recovery time (nWR) is measured from the first rising edge of CK_t that occurs after the last latching edge of WCK. For each MR2 OP[7:4] setting, device operation at less than the CK lower limit or higher than the CK upper limit is illegal.

Table 200 — nWR Latency

MR2 OP[7:4]	WCK:CK Ratio	Data Rate Range [Mbps]		CK Frequency Range [MHz]		nWR						Unit
		Lower Limit (>)	Upper Limit (≤)	Lower Limit (>)	Upper Limit (≤)	x16 w/o DVFSC w/o Write Link ECC	x8 w/o DVFSC w/o Write Link ECC	x16 w/o DVFSC w Write Link ECC	x8 w/o DVFSC w Write Link ECC	x16 w DVFSC w/o Write Link ECC	x8 w DVFSC w/o Write Link ECC	
0000	2:1	40	533	10	133	5	5	N/A	N/A	6	6	nCK
0001	2:1	533	1067	133	267	10	10	N/A	N/A	11	12	nCK
0010	2:1	1067	1600	267	400	14	15	N/A	N/A	17	18	nCK
0011	2:1	1600	2133	400	533	19	20	N/A	N/A	N/A	N/A	nCK
0100	2:1	2133	2750	533	688	24	25	N/A	N/A	N/A	N/A	nCK
0101	2:1	2750	3200	688	800	28	29	N/A	N/A	N/A	N/A	nCK
0000	4:1	40	533	5	67	3	3	N/A	N/A	3	3	nCK
0001	4:1	533	1067	67	133	5	5	N/A	N/A	6	6	nCK
0010	4:1	1067	1600	133	200	7	8	N/A	N/A	9	9	nCK
0011	4:1	1600	2133	200	267	10	10	N/A	N/A	N/A	N/A	nCK
0100	4:1	2133	2750	267	344	12	13	N/A	N/A	N/A	N/A	nCK
0101	4:1	2750	3200	344	400	14	15	N/A	N/A	N/A	N/A	nCK
0110	4:1	3200	3733	400	467	16	17	18	19	N/A	N/A	nCK
0111	4:1	3733	4267	467	533	19	20	21	22	N/A	N/A	nCK
1000	4:1	4267	4800	533	600	21	22	23	24	N/A	N/A	nCK
1001	4:1	4800	5500	600	688	24	25	27	28	N/A	N/A	nCK
1010	4:1	5500	6000	688	750	26	28	29	31	N/A	N/A	nCK
1011	4:1	6000	6400	750	800	28	29	31	32	N/A	N/A	nCK

NOTE 1 The LPDDR5 SDRAM should not be operated at a frequency above the Upper Frequency Limit, or below the Lower Frequency Limit, shown for each nWR value.

NOTE 2 The programmed value of nWR is the number of clock cycles the LPDDR5 SDRAM uses to determine the starting point of an internal Precharge operation after a Write burst with AP (Auto Precharge). It is determined by RU(tWR/tCK).

7.4.8.3 Write Recovery time (Cont'd)

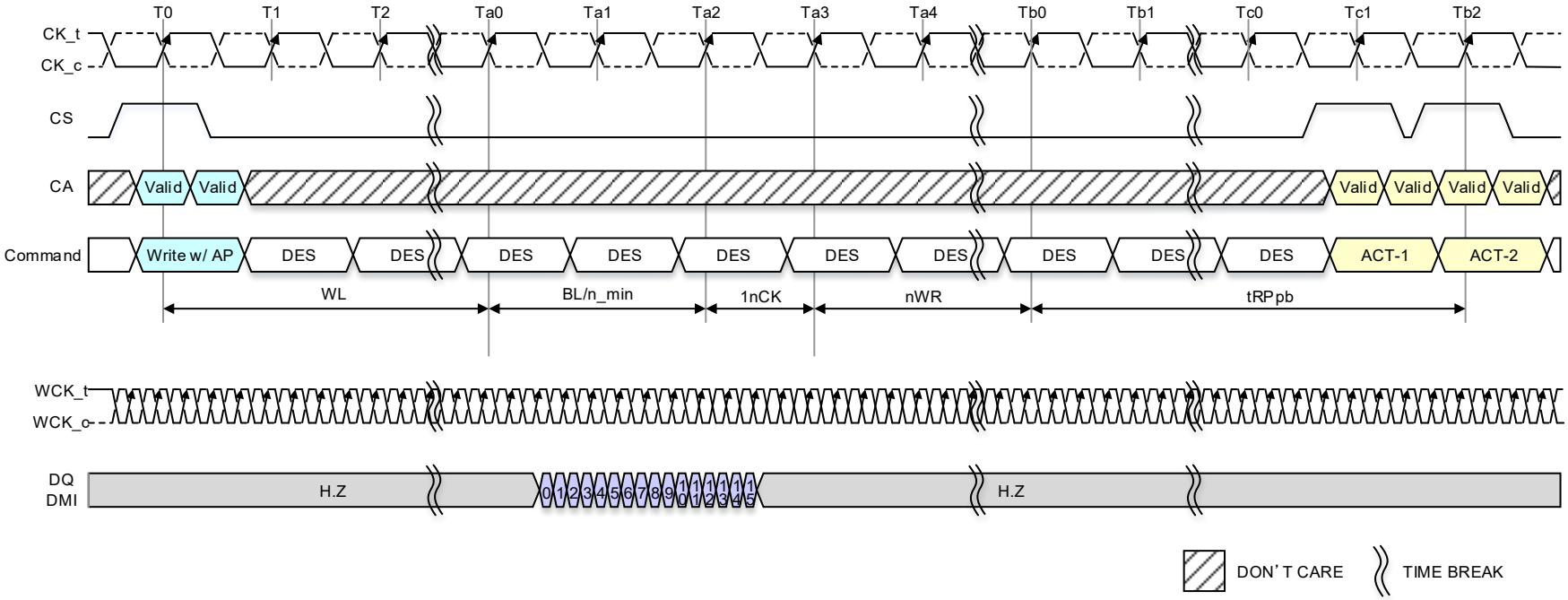

NOTE 1 DES commands are shown for ease of illustration; other commands may be valid at these times.

Figure 107 — Write Recovery Latency Timing

7.4.9 Masked Write

The LPDDR5 SDRAM requires that Write operations which include a byte mask anywhere in the burst sequence must use the Masked Write command. This allows the DRAM to implement efficient data protection schemes based on larger data blocks. The Masked Write command to the same banks in same bank-group cannot be issued until tCCDMW later, to allow the LPDDR5-SDRAM to finish the internal Read-Modify-Write. One Data Mask-Invert (DMI) pin is provided per byte lane, and the Data Mask-Invert timings match data bit (DQ) timing. See 7.4.10 for more information on the use of the DMI signal. Please refer to 8 for command timing constraints for each bank architecture timing. Table 201 is a description of tCCDMW following CKR and Bank mode.

Table 201 — tCCDMW

WCK:CK Ratio	Bank ORG	WCK frequency	tCCDMW
2:1	16B	≤1600Mhz	16*tCK
	8B	≤1600Mhz	16*tCK
4:1	16B	≤1600Mhz	8*tCK
	BG Mode	>1600Mhz	16*tCK
	8B	Any freq.	16*tCK

7.4.9 Masked Write (Cont'd)

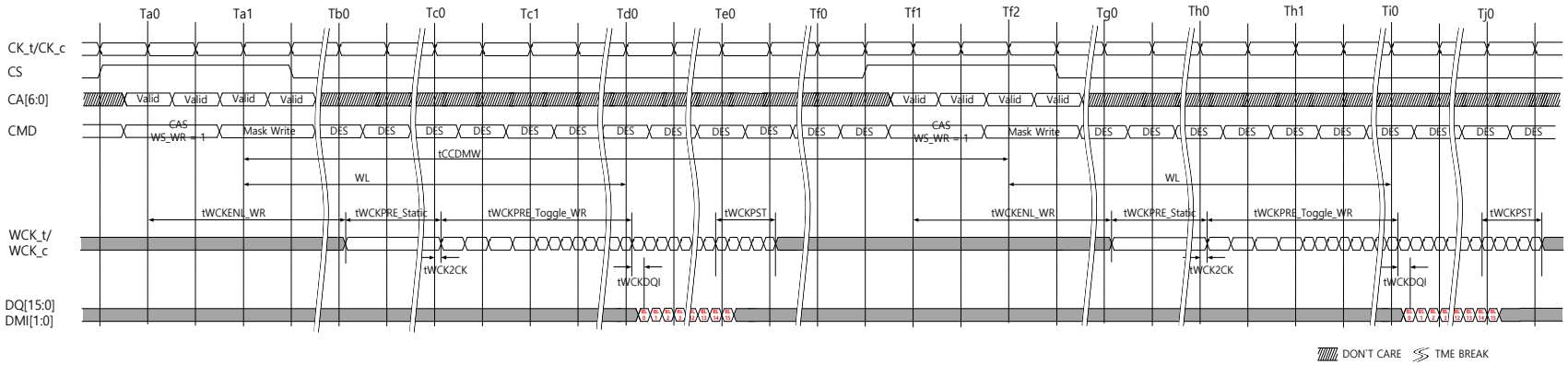

NOTE 1 Masked Write command is only BL=16 in 4Bank/4BG or 16 Bank mode.
NOTE 2 In order to issue another Masked Write command to same bank without any other commands in between, new WCK2CK synchronization process may be required when tCCDMW > WL + BL/n_max if DRAM is not in WCK free running mode.
NOTE 3 tCCDMW = 16 × tCK (4×tCCD_L) in 4Bank 4BG mode, and 8 × tCK (4×tCCD) in 16 bank mode.
NOTE 4 DES commands are shown for ease of illustration; other commands may be valid at these times.

Figure 108 — Masked Write Command – Same Bank Operation Timing without any other DQ operation commands in 4Bank/4BG or 16Bank mode

7.4.9 Masked Write (Cont'd)

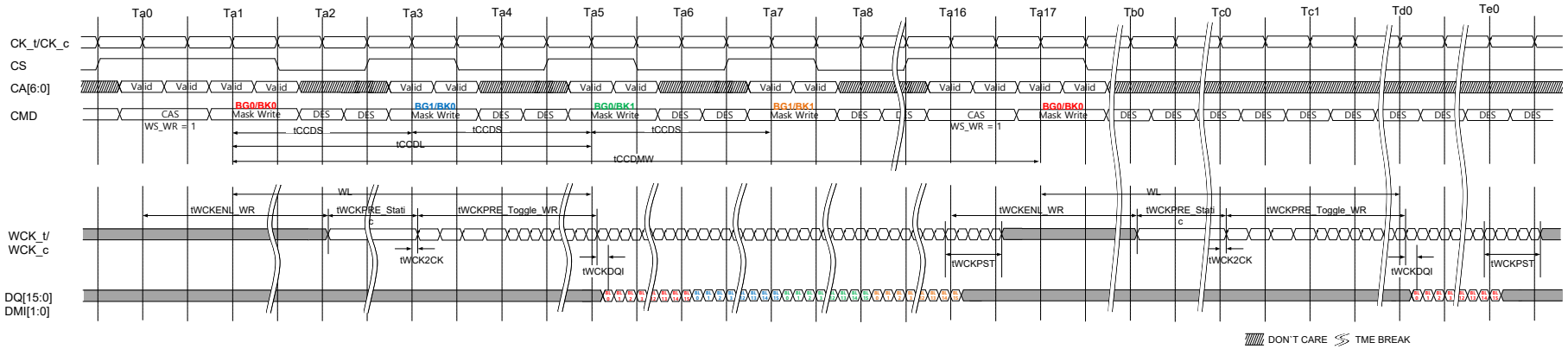

NOTE 1 Masked Write command is only BL=16 in 4Bank/4BG.
NOTE 2 Masked Write command for different bank groups can be issued every after tCCD_S(2 × tCK).
NOTE 3 Masked Write command for different bank in same bank group can be issued every after tCCD_L(4 × tCK).
NOTE 4 Masked Write command for same bank in same bank group must be issued after tCCDMW (16 × tCK).
NOTE 5 DES commands are shown for ease of illustration; other commands may be valid at these times

Figure 109 — Masked Write Command – Different Bank Group Operation Timing in 4Bank/4BG mode

7.4.9 Masked Write (Cont'd)

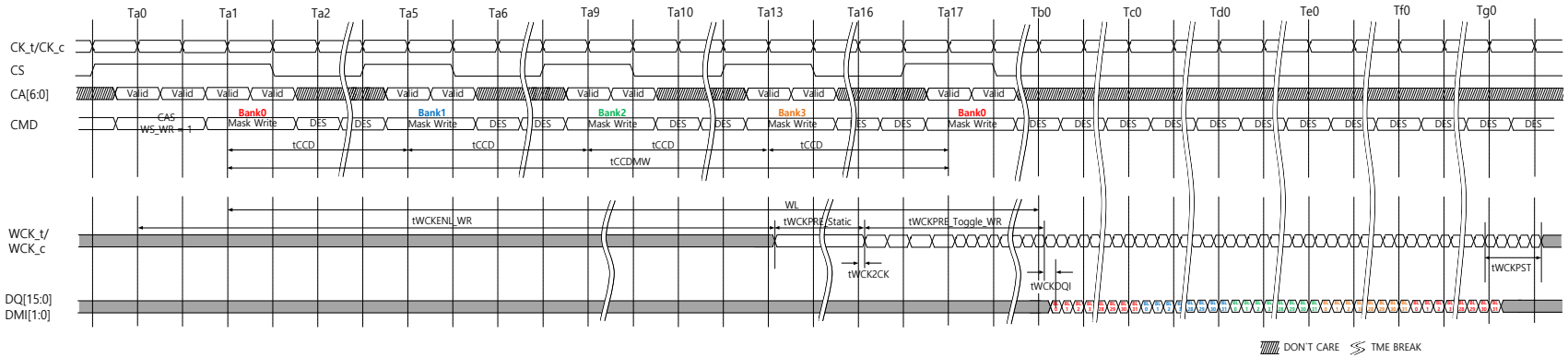

NOTE 1 Masked Write command is only BL=32 in 8 bank mode.
NOTE 2 Masked Write command for different bank can be issued every after tCCD(4 × tCK).
NOTE 3 Masked Write command for same bank must be issued after tCCDMW (16 × tCK).
NOTE 4 DES commands are shown for ease of illustration; other commands may be valid at these times.

Figure 110 — Masked Write Command – Different Bank Operation Timing in 8-Bank Mode (BL32 only)

7.4.9 Masked Write (Cont'd)

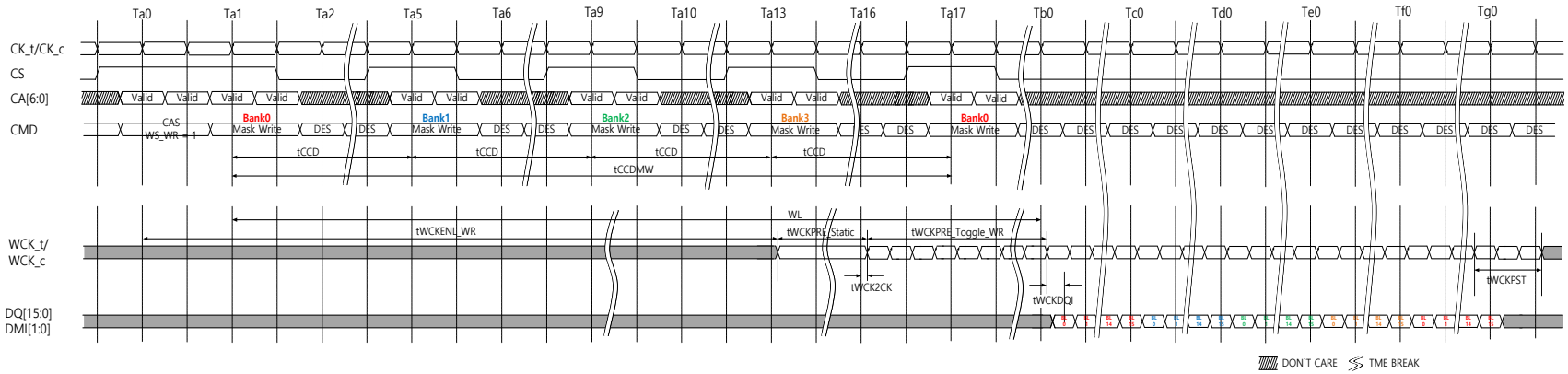

NOTE 1 Masked Write command is only BL=16 in 16 bank mode.
NOTE 2 Masked Write command for different bank can be issued every after tCCD(4 × tCK) (CKR=2:1).
NOTE 3 Masked Write command for same bank must be issued after tCCDMW (16 × tCK) (CKR=2:1).
NOTE 4 DES commands are shown for ease of illustration; other commands may be valid at these time.

Figure 111 — Masked Write Command – 16 Bank Mode (WCK:CK = 2:1)

7.4.10 Data Mask (DM) and Data Bus Inversion (DBI-DC) Function

LPDDR5 SDRAM supports the function of Data Mask and Data Bus inversion. Its details are shown below.

- LPDDR5 device supports Data Mask (DM) function for Write operation.
- LPDDR5 device supports Data Bus Inversion (DBI-DC) function for Write and Read operation.
- LPDDR5 supports DM and DBI-DC function with a byte granularity.
- DBI-DC function during Write or Masked Write can be enabled or disabled through MR3 OP[7].
- DBI-DC function during Read can be enabled or disabled through MR3 OP[6].
- DM function during Masked Write can be enabled or disabled through MR13 OP[5].
- LPDDR5 device has one Data Mask Inversion (DMI) signal pin per byte; total of 2 DMI signals per channel.
- DMI signal is a bi-directional DDR signal and is sampled along with the DQ signals for Read and Write or Masked Write operation.

DMI is also used input/output pin for Read Link ECC, Write Link ECC and Read Data Copy Function. The DMI behavior by each MR setting such as DM, DBI, Link ECC and Data Copy is described in following tables.

7.4.10.1 DMI Pin Behavior with Write Related Commands

Table 202 - DMI pin behavior by command and support function setting for Write Related Commands

Function				DMI Input Behavior			
Data Mask MR13 OP[5]	Write DBI MR3 OP[7]	Write Link ECC MR22 OP[4:5]	Write Data Copy MR21 OP[4]	Write CMD	Masked Write CMD	Write FIFO CMD	Write CMD at RD/WR-based WCK-RDQS_t Training Mode
Disable	Disable	Disable	Disable	Receiver is turned off	Prohibited setting	Follows FIFO Definition	Receiver is turned off
Disable	Disable	Disable	Enable	Receiver is turned off	Prohibited setting	Follows FIFO Definition	Receiver is turned off
Disable	Disable	Enable	Disable	Receiver is turned off	Prohibited setting	Follows FIFO Definition	Receiver is turned off
Disable	Disable	Enable	Enable	Receiver is turned off	Prohibited setting	Follows FIFO Definition	Receiver is turned off
Disable	Enable	Disable	Disable	DBI data input	Prohibited setting	Follows FIFO Definition	Receiver is turned off
Disable	Enable	Disable	Enable	Fixed low input when DC hit or DBI data input when DC miss	Prohibited setting	Follows FIFO Definition	Receiver is turned off
Disable	Enable	Enable	Disable	DBI data input	Prohibited setting	Follows FIFO Definition	Receiver is turned off
Disable	Enable	Enable	Enable	Fixed low input when DC hit or DBI data input when DC miss	Prohibited setting	Follows FIFO Definition	Receiver is turned off
Enable	Disable	Disable	Disable	Fixed low input	DM data input	Follows FIFO Definition	Receiver is turned off
Enable	Disable	Disable	Enable	Fixed low input	DM data input	Follows FIFO Definition	Receiver is turned off
Enable	Disable	Enable	Disable	Fixed low input	DM data input	Follows FIFO Definition	Receiver is turned off
Enable	Disable	Enable	Enable	Fixed low input	DM data input	Follows FIFO Definition	Receiver is turned off
Enable	Enable	Disable	Disable	DBI data input	DM & DBI data input	Follows FIFO Definition	Receiver is turned off
Enable	Enable	Disable	Enable	Fixed low input when DC hit or DBI data input when DC miss	DM & DBI data input	Follows FIFO Definition	Receiver is turned off
Enable	Enable	Enable	Disable	DBI data input	DM & DBI data input	Follows FIFO Definition	Receiver is turned off
Enable	Enable	Enable	Enable	Fixed low input when DC hit or DBI data input when DC miss	DM & DBI data input	Follows FIFO Definition	Receiver is turned off

NOTE 1 Explanation of terminology in the cells.
- Receiver is turned off: The input level is shown in "don't" care in the timing diagram.

- Fixed low input: The input level is fixed to LOW.
- Follows FIFO Definition: DMI pin behavior follows WCK-DQ (FIFO) training definition. Data Mask, Write DBI and/or Write Link ECC functions are disabled regardless of MR setting. See WCK-DQ section for detail.
- Prohibited setting: Corresponding command issuing is prohibited in this mode register setting or enabling these functions are prohibited at the same time.
- Valid data input: High or low input is required. These data are not required to have any meaning.
- DBI data input: DMI signal is treated as DBI signal and it indicates whether SDRAM needs to invert the Write data received on DQs within a byte. The LPDDR5 SDRAM inverts Write data received on the DQ inputs in case DMI was sampled HIGH, or leaves the Write data non-inverted in case DMI was sampled LOW. Total count of '1' data bits on DQ[2:7] or DQ[10:15] (for Lower Byte or Upper Byte respectively), the Write data received on the DQ inputs, should less than or equal to four during Write DBI is enabled.
- DM data input: The LPDDR5 SDRAM requires an explicit Masked Write command for all masked write operations. DMI signal is treated as DM signal and it indicates which bit time within the burst is to be masked. When DMI signal is HIGH, SDRAM masks that bit time across all DQs associated within a byte. All DQ input signals within a byte are don't care (either HIGH or LOW) when DMI signal is HIGH. When DMI signal is LOW, the LPDDR5 SDRAM does not perform mask operation and data received on DQ input is written to the array.
- DM & DBI data input: The LPDDR5 SDRAM requires an explicit Masked Write command for all masked write operations. The LPDDR5 SDRAM masks the Write data received on the DQ inputs if the total count of '1' data bits on DQ[2:7] or DQ[10:15] (for Lower Byte or Upper Byte respectively) is equal to or greater than five and DMI signal is LOW. Otherwise the LPDDR5 DRAM does not perform mask operation and treats it as a legal DBI pattern; DMI signal is treated as DBI signal and data received on DQ input is written to the array.

NOTE 2 When both DM and Write Data copy is enabled, the low level is required to be to input to DMI when Write with Data Copy command is issued regardless Data Copy (DC) miss/hit selection.

NOTE 3 Masked Write Command is not allowed and is considered an illegal cmmand as DM function is disabled.

7.4.10.2 DMI Pin Behavior with Read and MRR Commands

Table 203 - DMI pin behavior by command and support function setting for Read and MRR commands

Function			DMI Output Behavior		
Read DBI MR3 OP[6]	Read Link ECC MR22 OP[7:6]	Read Data Copy MR21 OP[5]	Read	Mode Register Read	Read CMD at RD/WR-based WCK-RDQS_t Training Mode
Disable	Disable	Disable	Driver is turned off	Driver is turned off	Driver is turned off
Disable	Disable	Enable	Follows Data Copy Definition	Valid data output	Follows Data Copy Definition
Disable	Enable	Disable	Follows Link ECC Definition	Valid data output	Follows Link ECC Definition
Disable	Enable	Enable	Prohibited setting	Prohibited setting	Prohibited setting
Enable	Disable	Disable	DBI data output	Fixed low output	DBI data output
Enable	Disable	Enable	Follows Data Copy Definition	Fixed low output	Follows Data Copy Definition
Enable	Enable	Disable	Prohibited setting	Prohibited setting	Prohibited setting
Enable	Enable	Enable	Prohibited setting	Prohibited setting	Prohibited setting

NOTE 1 Explanation of terminology in the cells.

- Follows Data Copy Definition: DMI pin behavior follows Data Copy definition. See Data Copy section for detail.
- Follows Link ECC Definition: DMI pin behavior follows Link ECC definition. See Link ECC section for detail.
- Prohibited setting: Corresponding command issuing is prohibited in this mode register setting or enabling these functions are prohibited at the same time.
- Valid data output: High or low data is outputted. And these output data are meaningless.
- Fixed low output: The output level is fixed to LOW.
- DBI data output: The LPDDR5 SDRAM inverts Read data on its DQ outputs associated within a byte and drives DMI signal HIGH when the number of '1' data bits within a given byte lane is greater than four; otherwise the SDRAM does not invert the read data and drives DMI signal LOW.

7.4.10.3 DMI Pin Behavior with Read FIFO and Read DQ Calibration Commands

MR0 OP[4] indicates whether DMI output behavior control is supported or not. If MR0 OP[4]=1_B, DMI input/output behavior control mode can be selected MR13 OP[4].

- MR0 OP[4]=0_B
  Only mode 1 is supported.
- MR0 OP[4]=1_B
  Mode 1 and Mode 2 can be selectable.

The outline of Mode 1 and Mode 2.

- Mode1: MR13 OP[4]=0_B
  DMI Output behavior follows MR setting Read DBI, Read Link ECC and Read Data Copy.
- Mode 2: MR13 OP[4]=1_B
  DMI outputs a valid data, if Read FIFO Command and Read DQ Calibration Command is issued when Data Mask and/or Write DBI are enabled even though Read DBI, Read Link ECC and Read Data Copy are disabled.

Table 204 - DMI pin behavior by command and support function setting for RFF and RDC Command

Function						DMI Output Behavior	
DMI Output Control MR13 OP[4]	Data Mask MR13 OP[5]	Write DBI MR3 OP[7]	Read DBI MR3 OP[6]	Read Link ECC MR22 OP[7:6]	Read Data Copy MR21 OP[5]	Read FIFO	Read DQ Calibration
Mode 1	Don't care	Don't care	Disable	Disable	Disable	Follows FIFO Definition	Driver is turned off
Mode 1	Don't care	Don't care	Disable	Disable	Enable	Follows FIFO Definition	Follows RDC Definition
Mode 1	Don't care	Don't care	Disable	Enable	Disable	Follows FIFO Definition	Follows RDC Definition
Mode 1	Don't care	Don't care	Disable	Enable	Enable	Prohibited setting	Prohibited setting
Mode 1	Don't care	Don't care	Enable	Disable	Disable	Follows FIFO Definition	Follows RDC Definition
Mode 1	Don't care	Don't care	Enable	Disable	Enable	Follows FIFO Definition	Follows RDC Definition
Mode 1	Don't care	Don't care	Enable	Enable	Disable	Prohibited setting	Prohibited setting
Mode 1	Don't care	Don't care	Enable	Enable	Enable	Prohibited setting	Prohibited setting
Mode 2	Disable	Disable	Disable	Disable	Disable	Follows FIFO Definition	Driver is turned off
Mode 2	Disable	Enable	Disable	Disable	Disable	Follows FIFO Definition	Follows RDC Definition
Mode 2	Enable	Disable	Disable	Disable	Disable	Follows FIFO Definition	Follows RDC Definition
Mode 2	Enable	Enable	Disable	Disable	Disable	Follows FIFO Definition	Follows RDC Definition
Mode 2	Don't care	Don't care	Disable	Disable	Enable	Follows FIFO Definition	Follows RDC Definition
Mode 2	Don't care	Don't care	Disable	Enable	Disable	Follows FIFO Definition	Follows RDC Definition
Mode 2	Don't care	Don't care	Disable	Enable	Enable	Prohibited setting	Prohibited setting
Mode 2	Don't care	Don't care	Enable	Disable	Disable	Follows FIFO Definition	Follows RDC Definition
Mode 2	Don't care	Don't care	Enable	Disable	Enable	Follows FIFO Definition	Follows RDC Definition
Mode 2	Don't care	Don't care	Enable	Enable	Disable	Prohibited setting	Prohibited setting
Mode 2	Don't care	Don't care	Enable	Enable	Enable	Prohibited setting	Prohibited setting

NOTE 1 Explanation of terminology in the cells.

- Follows FIFO Definition: DMI pin behavior follows WCK-DQ (FIFO) training definition. Read DBI, Read Link ECC and/or Read Data Copy functions are disabled regardless of MR setting. See WCK-DQ Training (FIFO Training) section for detail.
- Follows RDC Definition: DMI pin behavior follows RDC definition. Read DBI, Read Link ECC and/or Read Data Copy functions are disabled regardless of MR setting. See RDC section for detail.
- Prohibited setting: Corresponding command issuing is prohibited in this mode register setting or enabling these functions are prohibited at the same time.

7.5 Refresh operation

7.5.1 Refresh command

The REFRESH command is initiated with CS HIGH, CA[2:0] LOW, CA[5:3] HIGH, CA6 LOW at the rising edge of the clock. Per-bank REFRESH is initiated with CA6 LOW at the falling edge of the clock. All-bank REFRESH is initiated with CA6 HIGH at the falling edge of the clock.

A per-bank REFRESH command (REFpb) is performed to the bank address as transferred on CA0, CA1, and CA2 at the falling edge of the clock. Bank address BA0 is transferred on CA0, bank address BA1 is transferred on CA1 and Bank address BA2 is transferred on CA2. Bank address BA3 is transferred on CA3 additionally “don’t care” for 4bank/4BG and 16bank mode, and then per-bank REFRESH is performed to 2 banks simultaneously.

Example for 4Bank/4BG mode or 16Bank mode - A per-bank REFRESH command (REFpb) to the 16 banks can be issued in any order. e.g., REFpb commands may be issued in the following order: (1,9)-(5,13)-(0,8)-(2,10)-(6,14)-(7,15)-(3,11)-(4,12). After the 16 banks have been refreshed using the per-bank REFRESH command the controller can send another set of per-bank REFRESH commands in the same order or a different order. e.g., REFpb commands are issued in the following order that is different from the previous order: (7,15)-(3,11)-(2,10)-(4,12)-(6,14)-(0,8)-(1,9)-(5,13). One of the possible order can also be a sequential round robin: (0,8)-(1,9)-(2,10)-(3,11)-(4,12)-(5,13)-(6,14)-(7,15). It is illegal to send a per-bank REFRESH command to the same bank unless all 16 banks have been refreshed using the per-bank REFRESH command. The count of 8 REFpb commands starts with the first REFpb command after a synchronization event.

Example for 8Bank mode - A per-bank REFRESH command (REFpb) to the 8-Banks can be issued in any order. e.g., REFpb commands may be issued in the following order: 1-0-2-7-6-3-4-5. After the 8-Banks have been refreshed using the per-bank REFRESH command the controller can send another set of per-bank REFRESH commands in the same order or a different order. e.g., REFpb commands are issued in the following order that is different from the previous order: 7-3-4-2-6-0-1-5. One of the possible order can also be a sequential round robin: 0-1-2-3-4-5-6-7. It is illegal to send a per-bank REFRESH command to the same bank unless all 8-Banks have been refreshed using the per-bank REFRESH command. The count of 8 REFpb commands starts with the first REFpb command after a synchronization event.

The bank count is synchronized between the controller and the SDRAM by resetting the bank count to zero. Synchronization can occur upon issuing a RESET_n or at every exit from self-refresh. REFab command also synchronizes the counter between the controller and SDRAM to zero. The SDRAM device can be placed in self-refresh or a REFab command can be issued at any time without cycling through all banks using per-bank REFRESH command. After the bank count is synchronized to zero, the controller can issue per-bank REFRESH commands in any order as described in the previous paragraph.

A REFab command issued when the bank counter is not zero will reset the bank counter to zero and the DRAM will perform refreshes to all banks as indicated by the row counter. If another refresh command (REFab or REFpb) is issued after the REFab command, then it uses an incremented value of the row counter. Table 205 for 4bank/4BG mode or 16Bank mode, Table 206 for 8bank mode show examples of both bank and refresh counter increment behavior.

7.5.1 Refresh command (Cont'd)

Table 205 — Bank and Refresh counter increment behavior on the 4Bank/4BG mode or 16Bank mode

#	SUB #	Command	BG1	BG0	BA1	BA0	Refresh Bank #	Bank Counter #	Ref Counter # (Row Address #)
0	0	**Reset, SRX or REFab**						To 0	
1	1	REFpb	X	0	0	0	0/8	0 to 1	n
2	2	REFpb	X	0	0	1	1/9	1 to 2	
3	3	REFpb	X	0	1	0	2/10	2 to 3	
4	4	REFpb	X	0	1	1	3/11	3 to 4	
5	5	REFpb	X	1	0	0	4/12	4 to 5	
6	6	REFpb	X	1	0	1	5/13	5 to 6	
7	7	REFpb	X	1	1	0	6/14	6 to 7	
8	8	REFpb	X	1	1	1	7/15	7 to 0	
9	1	REFpb	X	1	1	0	6/14	0 to 1	n+1
10	2	REFpb	X	1	1	1	7/15	1 to 2	
• • •									
15	7	REFpb	X	0	0	0	0/8	6 to 7	
16	8	REFpb	X	1	0	0	4/12	7 to 0	
17	1	REFpb	X	0	0	0	0/8	0 to 1	n+2
18	2	REFpb	X	0	0	1	1/9	1 to 2	
19	3	REFpb	X	0	1	0	2/10	2 to 3	
20	**0**	**REFab**	**V**	**V**	**V**	**V**	**0~15**	**To 0**	**n+2**
21	1	REFpb	X	0	1	0	2/10	0 to 1	n+3
22	2	REFpb	X	1	0	1	5/13	1 to 2	
Snip									

7.5.1 Refresh command (Cont'd)

Table 206 — Bank and Refresh counter increment behavior on the 8bank mode

#	SUB #	Command	BA2	BA1	BA0	Refresh Bank #	Bank Counter #	Ref Counter # (Row Address #)
0	0	**Reset, SRX or REFab**					To 0	
1	1	REFpb	0	0	0	0	0 to 1	n
2	2	REFpb	0	0	1	1	1 to 2	
3	3	REFpb	0	1	0	2	2 to 3	
4	4	REFpb	0	1	1	3	3 to 4	
5	5	REFpb	1	0	0	4	4 to 5	
6	6	REFpb	1	0	1	5	5 to 6	
7	7	REFpb	1	1	0	6	6 to 7	
8	8	REFpb	1	1	1	7	7 to 0	
9	1	REFpb	1	1	0	6	0 to 1	n+1
10	2	REFpb	1	1	1	7	1 to 2	
		• • •						
15	7	REFpb	0	0	0	0	6 to 7	
16	8	REFpb	1	0	0	4	7 to 0	
17	1	REFpb	0	0	0	0	0 to 1	n+2
18	2	REFpb	0	0	1	1	1 to 2	
19	3	REFpb	0	1	0	2	2 to 3	
20	**0**	**REFab**	**V**	**V**	**V**	**0~7**	**To 0**	**n+2**
21	1	REFpb	0	1	0	2	0 to 1	n+3
22	2	REFpb	1	0	1	5	1 to 2	
Snip								

A bank must be idle before it can be refreshed. The controller must track the bank(or bank pair in the case of BG mode and 16bank mode) being refreshed by the per-bank REFRESH command.
The REFpb command must not be issued to the device until the following conditions are met:

- tRFCab has been satisfied after the prior REFab command.
- tpbR2pbR has been satisfied after the prior REFpb command.
- tRP has been satisfied after the prior PRECHARGE command to that bank.
- tRRD has been satisfied after the prior ACTIVATE command (if applicable, for example after activating a row in a different bank than the one affected by the REFpb command).

The target bank or bank pair is inaccessible during per-bank REFRESH cycle time (tRFCpb), however, other banks not being refreshed within the device are accessible and can be addressed during the cycle. During the REFpb operation, any of the non-refreshing banks can be maintained in an active state or accessed by a READ or a WRITE command. When the per-bank REFRESH cycle has completed, the affected bank or bank pair will be in the idle state.

7.5.1 Refresh command (Cont'd)

After issuing REFpb, these conditions must be met:

- tRFCpb must be satisfied before issuing a REFab command.
- tRFCpb must be satisfied before issuing an ACTIVATE command to the same bank or bank pair.
- tpbr2act must be satisfied before issuing an ACTIVATE command to a different non-refreshing bank.
- tpbR2pbR must be satisfied before issuing another REFpb command.

An all-bank REFRESH command (REFab) issues a REFRESH command to all banks. All banks must be idle when REFab is issued (for instance, by issuing a PRECHARGE-ALL command prior to issuing an all-bank REFRESH command). REFab also synchronizes the bank count between the controller and the SDRAM to zero. The REFab command must not be issued to the device until the following conditions have been met:

- tRFCab has been satisfied following the prior REFab command.
- tRFCpb has been satisfied following the prior REFpb command.
- tRP has been satisfied following the prior PRECHARGE command.

When an all-bank refresh cycle has completed, all banks will be idle. After issuing REFab:

- tRFCab latency must be satisfied before issuing an ACTIVATE command.
- tRFCab latency must be satisfied before issuing a REFab or REFpb command.

Table 207 — REFRESH Command Scheduling Separation requirements for 4Bank /4BG mode or 16Bank mode

Symbol	Minimum Delay From	To	Note
tRFCab	REFab	REFab	
		Activate command to any bank	
		REFpb	
tRFCpb	REFpb	REFab	
		Activate command to same bank as REFpb	
tpbr2act	REFpb	Activate command to different bank than REFpb	
tRRD_S	Activate	REFpb to different bank group than prior Activate command	1
		Activate command to different bank group than prior Activate command	
tRRD_L	Activate	REFpb in same bank group	1
		Activate command to different bank than prior Activate command in same bank group	
tpbR2pbR	REFpb	REFpb	

NOTE A bank must be in the idle state before it is refreshed, so following an ACTIVATE command REFab is prohibited; REFpb is supported only if it affects a bank that is in the idle state.

7.5.1 Refresh command (Cont'd)

Table 208 — REFRESH Command Scheduling Separation requirements for 8Bank mode

Symbol	Minimum Delay From	To	Note
tRFCab	REFab	REFab	
		Activate command to any bank	
		REFpb	
tRFCpb	REFpb	REFab	
		Activate command to same bank as REFpb	
tpbr2act	REFpb	Activate command to different bank than REFpb	
tRRD	REFpb	Activate command to different bank than REFpb	
	Activate	REFpb	1
		Activate command to different bank than prior Activate command	
tpbR2pbR	REFpb	REFpb	

NOTE A bank must be in the idle state before it is refreshed, so following an ACTIVATE command REFab is prohibited; REFpb is supported only if it affects a bank that is in the idle state.

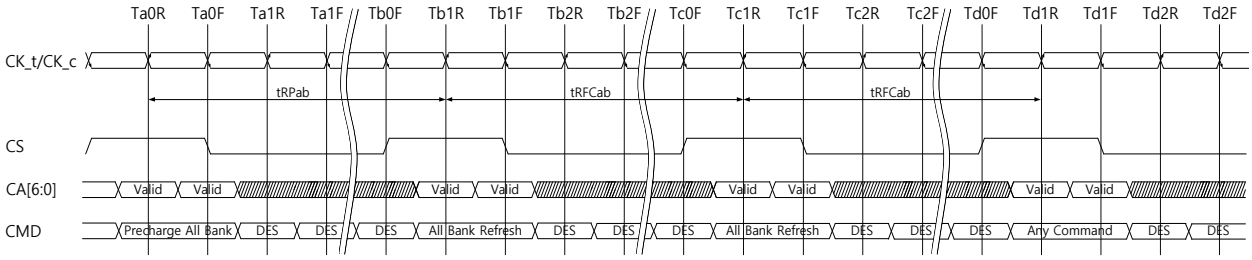

NOTES - 1. Only DES, NOP, PDE, MRR, MRW, MPC commands allowed after Refresh command registered until tRFCab(min) expires.

Figure 112 — All-Bank Refresh Operation

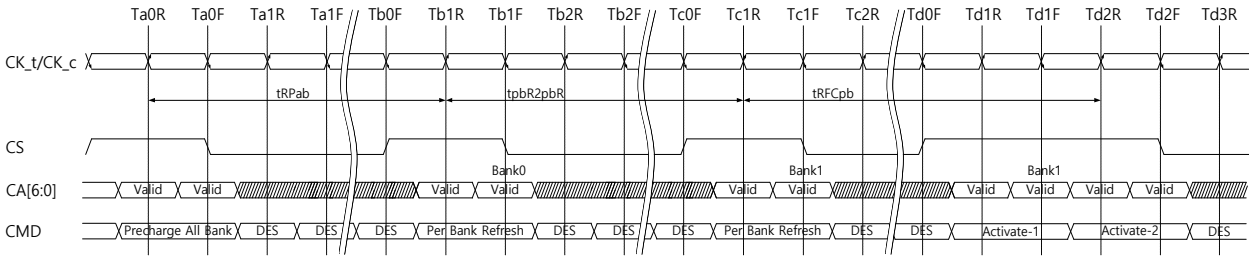

NOTES - 1. In the beginning of this example, the REFpb bank is pointing to bank 0.
2. Operations to banks other than the bank being refreshed are supported during the tRFCpb period.

Figure 113 — Per-Bank Refresh Operation

7.5.1 Refresh command (Cont'd)

In general, a Refresh command needs to be issued to the LPDDR5 SDRAM regularly every tREFi interval. To allow for improved efficiency in scheduling and switching between tasks, some flexibility in the absolute refresh interval is provided. A maximum of 8 Refresh commands can be postponed during operation of the LPDDR5 SDRAM, meaning that at no point in time more than a total of 8 Refresh commands are allowed to be postponed and maximum number of pulled-in or postponed REF command is dependent on refresh rate. It is described in Tabl 192.
In case that 8 Refresh commands are postponed in a row, the resulting maximum interval between the surrounding Refresh commands is limited to 9 x tREFi. A maximum of 8 additional Refresh commands can be issued in advance ("pulled in"), with each one reducing the number of regular Refresh commands required later by one. Note that pulling in more than 8 Refresh commands in advance does not further reduce the number of regular Refresh commands required later, so that the resulting maximum interval between two surrounding Refresh commands is limited to 9 x tREFi. At any given time, a maximum of 16 REF commands can be issued within 2 x tREFi. Self-Refresh Mode may be entered with a maximum of 8 Refresh commands being postponed. After exiting Self-Refresh Mode with one or more Refresh commands postponed, additional Refresh commands may be postponed to the extent that the total number of postponed Refresh commands (before and after the Self-Refresh) will never exceed 8. During Self-Refresh Mode, the number of postponed or pulled-in REF commands does not change.

7.5.1 Refresh command (Cont'd)

Table 209 - REFRESH Command Timing Constraints

MR4 OP[4:0]	Maximum Refresh Multiplier	Effective Refresh Interval tREFIe	Max. No. of pulled-in or postponed REFab	Max. Interval between two REFab	Max Number of REFab in a 'burst'	'Burst' Interval Definition	Per-bank Refresh
00000B	Low temp. Limit	N/A	N/A	N/A	N/A	N/A	N/A
00001B	8 x	8x tREFI	1	2 x tREFIe	16	2 x tREFI	1/8 of REFab
00010B	6 x	6 x tRFFI	1	2 x tREFIe	16	2 x tREFI	1/8 of REFab
00011B	4 x	4 x tREFI	2	3 x tREFIe	16	2 x tREFI	1/8 of REFab
00100B	3.3 x	3.3 x tREFI	2	3 x tREFIe	16	2 x tREFI	1/8 of REFab
00101B	2.5 x	2.5 x tREFI	3	4 x tREFIe	16	2 x tREFI	1/8 of REFab
00110B	2.0 x	2.0 x tREFI	4	5 x tREFIe	16	2 x tREFI	1/8 of REFab
00111B	1.7 x	1.7 x tREFI	5	6 x tREFIe	16	2 x tREFI	1/8 of REFab
01000B	1.3 x	1.3 x tREFI	6	7 x tREFIe	16	2 x tREFI	1/8 of REFab
01001B	1 x	1 x tREFI	8	9 x tREFIe	16	2 x tREFI	1/8 of REFab
01010B	0.7 x	0.7 x tREFI	8	9 x tREFIe	16	max(2xtREFIe, 16xtRFCab)	1/8 of REFab
01011B	0.5 x	0.5 x tREFI	8	9 x tREFIe	16	max(2xtREFIe, 16xtRFCab)	1/8 of REFab
01100B	0.25 x, no de-rating	0.25 x tREFI, no de-rating	8	9 x tREFIe	16	max(2xtREFIe, 16xtRFCab)	1/8 of REFab
01101B	0.25 x, with de-rating	0.25 x tREFI, with de-rating	8	9 x tREFIe	16	max(2xtREFIe, 16xtRFCab)	1/8 of REFab
01110B	0.125 x, no de-rating	0.125 x tREFI, no de-rating	8	9 x tREFIe	16	max(2xtREFIe, 16xtRFCab)	1/8 of REFab
01111B	0.125 x, with de-rating	0.125 x tREFI, with de-rating	8	9 x tREFIe	16	max(2xtREFIe, 16xtRFCab)	1/8 of REFab
11111B	SDRAM High temperature operating limit exceeded	N/A	N/A	N/A	N/A	N/A	N/A

NOTE1 For any thermal transition phase where Refresh mode is transitioned, DRAM will support the previous postponed refresh requirement provided the number of postponed refreshes is monotonically reduced to meet the new requirement. However, the pulled-in refresh commands in previous thermal phase are not applied in new thermal phase. Entering new thermal phase the controller must count the number of pulled-in refresh commands as zero, regardless of remaining pulled-in refresh commands in previous thermal phase.

NOTE 2 LPDDR5 devices are refreshed properly if memory controller issues refresh commands with same or shorter refresh period than reported by MR4 OP[4:0]. If shorter refresh period is applied, the corresponding requirements from table apply. For example, When MR4 OP[4:0]= 00001B, controller can be in any refresh multiplier from 8 to 0.25. When MR4 OP[4:0]= 00010_B, the only prohibited refresh rate is 8 * tREFI.

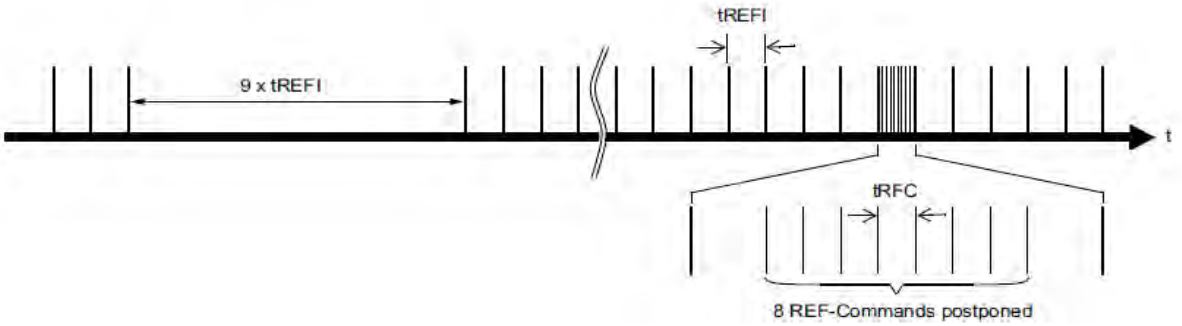

Figure 114 — Postponing Refresh Commands (Example)

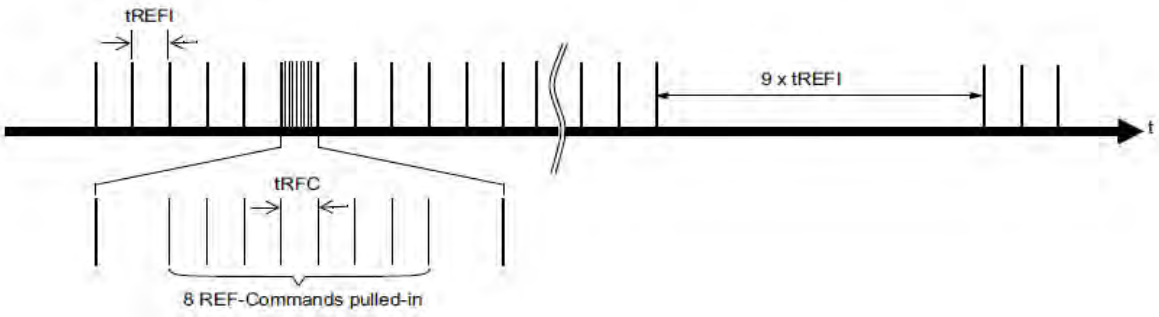

Figure 115 — Pulling-in Refresh Commands (Example)

7.5.2 Refresh Requirement

Between SRX command and SRE command, at least one extra refresh command is required. After the DRAM Self-Refresh Exit command, in addition to the normal Refresh command at tREFI interval, the LPDDR5 DRAM requires minimum of one extra Refresh command prior to Self-Refresh Entry command.

Table 210 - Refresh Requirement Parameters for BG mode or 16Bank mode

Refresh Requirements		Symbol	2Gb	3Gb	4Gb	6Gb	8Gb	12Gb	16Gb	24Gb	32Gb	Units
Number of banks per channel			16									
Refresh Window (tREFW) (1x Refresh)[2,3]		tREFW	32									ms
Required Number of REFRESH Commands in a tREFW window		R	8192	8192	8192	8192	8192	8192	8192	8192	8192	
Average Refresh Interval (1x Refresh)[2]	REFab	tREFI	3.906	3.906	3.906	3.906	3.906	3.906	3.906	3.906	3.906	us
	REFpb	tREFipb	488	488	488	488	488	488	488	488	488	ns
Refresh Cycle Time (All Banks)		tRFCab	130	180	180	210	210	280	280	TBD	TBD	ns
Refresh Cycle time (Per Bank)		tRFCpb	60	90	90	120	120	140	140	TBD	TBD	ns
Per-bank Refresh to Per-bank Refresh different bank time		tpbR2pbR	60	90	90	90	90	90	90	TBD	TBD	ns
REFpb to Activate command to different bank		tpbR2act	7.5	7.5	7.5	7.5	7.5	7.5	7.5	TBD	TBD	ns

NOTE 1 Refresh for each channel is independent of the other channel in a package. Power delivery in the user's system should be verified to make sure the DC operating conditions are maintained when multiple channels are refreshed simultaneously.

NOTE 2 1x refresh rate (tREFW=32ms) is supported at all temperatures at or below 85°C Tcase. If MR4 OP[4:0] indicates a refresh rate of greater than 1x is supported, tREFW can be extended.

NOTE 3 Refer to MR4 OP[4:0] for detailed Refresh Rate and its multipliers.

Table 211 - Refresh Requirement Parameters for 8Bank mode

Refresh Requirements		Symbol	2Gb	3Gb	4Gb	6Gb	8Gb	12Gb	16Gb	24Gb	32Gb	Units
Number of banks			8									
Refresh Window (tREFW) (1x Refresh)[2,3]		tREFW	32									ms
Required Number of REFRESH Commands in a tREFW window		R	8192	8192	8192	8192	8192	8192	8192	8192	8192	
Average Refresh Interval (1x Refresh)[2]	REFab	tREFI	3.906	3.906	3.906	3.906	3.906	3.906	3.906	3.906	3.906	us
	REFpb	tREFipb	488	488	488	488	488	488	488	488	488	ns
Refresh Cycle Time (All Banks)		tRFCab	130	180	180	210	210	280	280	TBD	TBD	ns
Refresh Cycle time (Per Bank)		tRFCpb	60	90	90	120	120	140	140	TBD	TBD	ns
Per-bank Refresh to Per-bank Refresh different bank time		tpbR2pbR	60	90	90	90	90	90	90	TBD	TBD	ns
REFpb to Activate command to different bank		tpbR2act	10	10	10	10	10	10	10	TBD	TBD	ns

NOTE 1 Refresh for each channel is independent of the other channel in a package. Power delivery in the user's system should be verified to make sure the DC operating conditions are maintained when multiple channels are refreshed simultaneously.

NOTE 2 1x refresh rate (tREFW=32ms) is supported at all temperatures at or below 85°C Tcase. If MR4 OP[4:0] indicates a refresh rate of greater than 1x is supported, tREFW can be extended.

NOTE 3 Refer to MR4 OP[4:0] for detailed Refresh Rate and its multipliers.

7.5.3 Optimized Refresh

Supporting optimized refresh is an optional feature in LPDDR5 specification. The use of Self Refresh mode introduces the possibility that an internally timed refresh event can be missed when Self Refresh Exit is registered. Upon exit from Self Refresh, it is required that at least one REFRESH command (1 all-bank or 16 per-bank for 4bank/4BG mode or 8 per-bank for 8bank mode) is issued before entry into a subsequent Self Refresh. However, this refresh can be managed as optimized way if memory controller can support Figure 116 optimized refresh timing. DRAM can also handle internal self refresh with own refresh timer.

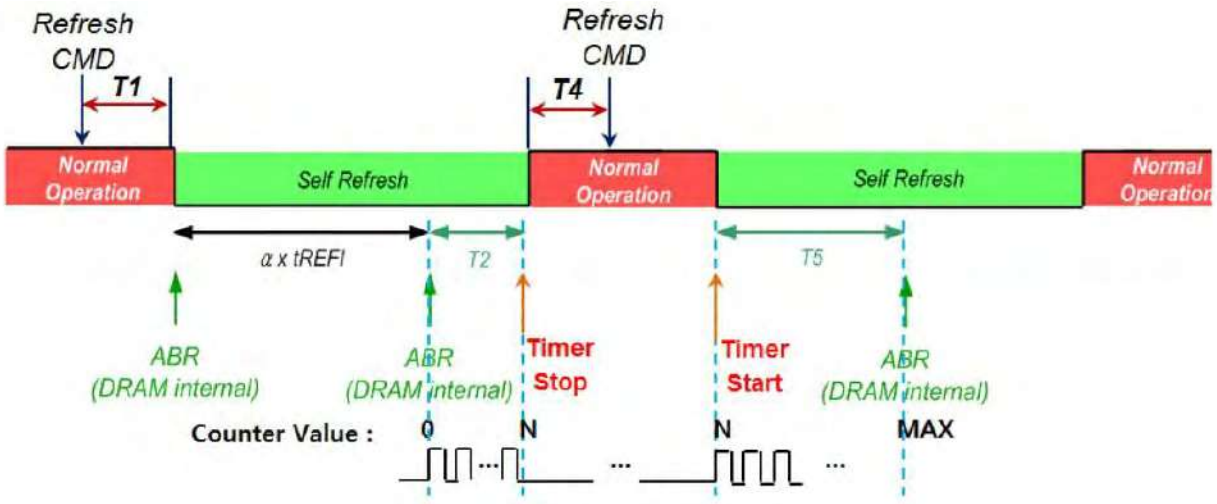

Figure 116 - Optimized Refresh Operation

Upon exit from self refresh mode, LPDDR5 SDRAM freeze and store the refresh timer value. When the DRAM enters self refresh mode, it shall resume the refresh timer from the saved value and increase it to the next value so that LPDDR5 can operate ABR only when the refresh timer expires in self refresh mode. If memory controller can manage the track of time(T1 & T4) for tREFI out of Self Refresh time period, it's all up to the memory controller to determine when to issue refresh command.

Table 212 - MR25 OP[7] for Optimized Refresh Control

Function	Register Type	Operand	Data
Optimized Refresh mode	Write-Only	OP[7]	0_B: Optimized Refresh mode disabled 1_B: Optimized Refresh mode enabled (default)

7.5.4 Self Refresh Operation

The Self Refresh command can be used to retain data in the LPDDR5 SDRAM; the SDRAM retains data without external Refresh command. The device has a built-in timer to accommodate Self Refresh operation. The Self Refresh is entered by Self Refresh Entry Command defined by having CS HIGH, CA[2:0] LOW, CA3 HIGH, CA4 LOW, CA5 HIGH and CA6 HIGH at the rising edge of the clock and CS don't care, CA[4:0] Valid (Valid that means it is Logic Level, High or Low), CA5 LOW and CA6 LOW at the falling edge of the clock. If Self Refresh command is issued with CA6 HIGH at the falling edge of the clock, Self-Refresh Command is initiated with Power Down status. Self-Refresh command is only allowed when read data burst is completed, in other words Read postamble is completed and SDRAM is idle state.

During Self Refresh mode, external clock input is needed and all input pin of SDRAM are activated and CA ODT state is maintained setting of its mode register, as well as NT ODT. SDRAM can accept the following commands; PDE, DSM, MRR, CAS, DES, SRX, MPC, RFF, WFF, RDC, MRW except PASR setting.

LPDDR5 SDRAM can operate in Self Refresh in both the standard or elevated temperature ranges.

SDRAM will also manage Self Refresh power consumption when the operating temperature changes lower at low temperature and higher at high temperatures.

For proper Self Refresh operation, power supply pins (VDD1, VDD2H, VDD2L and VDDQ) is required to be at valid levels. However VDDQ may be turned off during Self-Refresh with Power Down after tESPD is satisfied (Refer to **Figure 118** about tESPD).

Prior to exiting Self-Refresh with Power Down, VDDQ is required to be within specified limits. The minimum time that the SDRAM is required to remained in Self Refresh mode is tSRmin. Once Self Refresh Exit is registered, only MRR, CAS(WS_FS), CAS(WS_WR), CAS(WS_RD), CAS(WS_OFF), WFF, RFF, RDC, DES, MPC, MRW except PASR setting are allowed until tXSR is satisfied.

7.5.3 Self Refresh Operation (Cont'd)

The use of Self Refresh mode introduces the possibility that an internally timed refresh event can be missed when Self Refresh Exit is registered. Upon exit from Self Refresh, it is required that at least one REFRESH command (1 all-bank or 16 per-bank for 4bank/4BG mode or 8 per-bank for 8bank mode) is issued before entry into a subsequent Self Refresh. This REFRESH command is not included in the count of regular refresh commands required by the tREFI interval, and does not modify the postponed or pulled-in refresh counts; the REFRESH command does count toward the maximum refreshes permitted within 2 x tREFI.

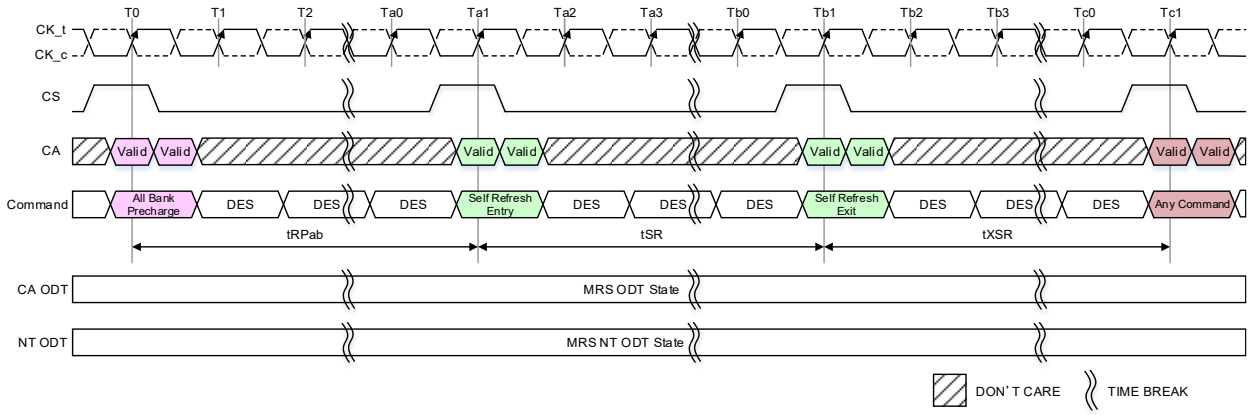

NOTE 1 PDE, DSM, MRR, CAS, DES, SRX, MPC, RFF, WFF, RDC, MRW except PASR setting is allowed during Self Refresh.

NOTE 2 DES commands are shown for ease of illustration; other commands may be valid at these times.

Figure 117 — Self Refresh Entry/Exit Timing

7.5.4.1 Power Down Entry and Exit during Self refresh

Entering/Exiting Power Down Mode is allowed during Self Refresh mode in SDRAM. The related timing parameters between Self Refresh Entry/Exit and Power Down Entry/Exit are shown in
Figure **118**. The power-down state is asynchronously exited when CS toggles HIGH (VIHPD). The AC parameters related to the Power Down are defined in the Power Down section, 7.5.7. The operation by command issued prior to PDE is required to be completed before changing clock frequency or stop clocking or turning off VDDQ.

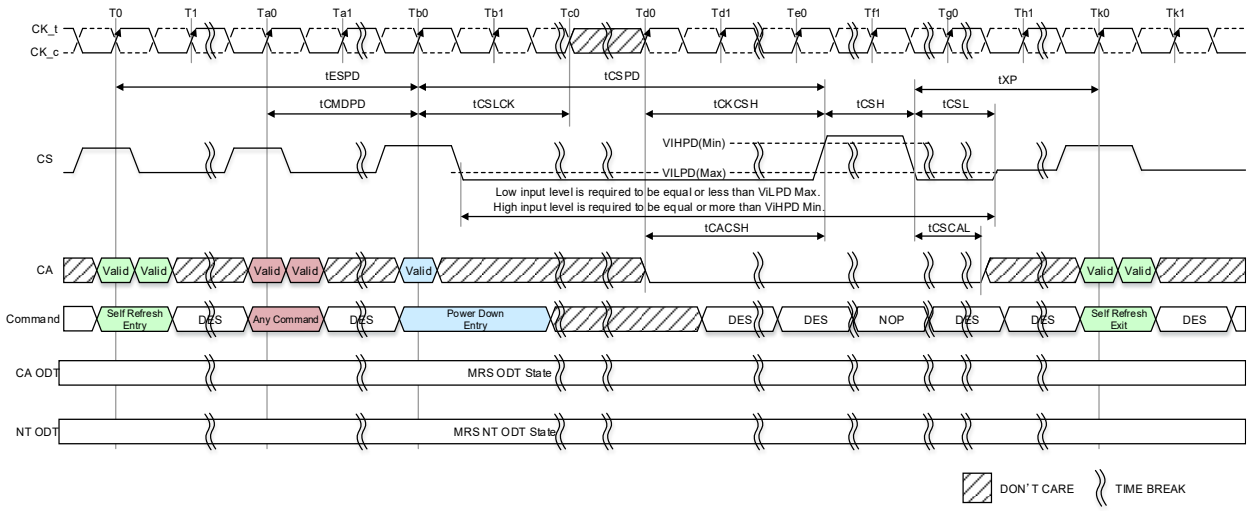

NOTE 1 PDE, DSM, MRR, CAS, DES, SRX, MPC, RFF, WFF, RDC, MRW except PASR setting is allowed during Self Refresh (No Power Down). The operation by command issued prior to Power Down Entry (PDE) is required to be completed before clock frequency or stop clocking or turning off VDDQ.

NOTE 2 Input clock frequency can be changed or the input clock can be stopped or floated after tCSLCK is satisfied and during Power Down, provided that upon existing Power Down, the clock is stable and within specified limits for a minimum of tCKCSH of stable clock prior to Power Down exit and the clock frequency is between the minimum and maximum specified frequency for the speed grade in use.

NOTE 3 The start point of tCSH and the end point of tCSPD/tCKCSH are crossover point of VIHPD(Min).

NOTE 4 The start point of tCSL/tXP and the end point of tCSL are crossover point of VILPD(Max).

NOTE 5 DES commands are shown for ease of illustration; other commands may be valid at these times where the CA input is indicated "don't care" together.

Figure 118 — Self Refresh Entry/Exit Timing with Power Down Entry/Exit

7.5.3.1 Power Down Entry and Exit during Self refresh (Cont'd)

If Self Refresh command is issued with CA6 HIGH at the falling edge of the clock, Self-Refresh Command is initiated with Power Down status.

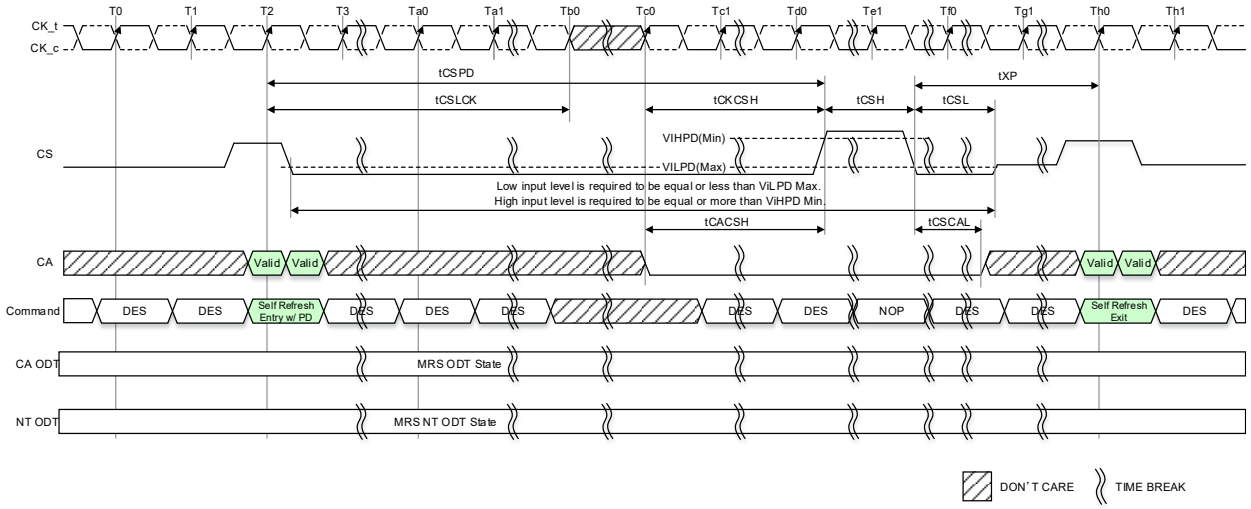

NOTE 1 Input clock frequency can be changed or the input clock can be stopped or floated after tCSLCK is satisfied and during Power Down, provided that upon exiting Power Down, the clock is stable and within specified limits for a minimum of tCKCSH of stable clock prior to Power Down exit and the clock frequency is between the minimum and maximum specified frequency for the speed grade in use.

NOTE 2 DES commands are shown for ease of illustration; other commands may be valid at these times where the CA input is indicated "don't care" together.

Figure 119 — Self Refresh Entry with PD="1" Timing

7.5.4.2 Command input Timing after Power Down Exit during Self Refresh

Command input timings after Power Down Exit during Self Refresh mode are shown in **Figure 120**.

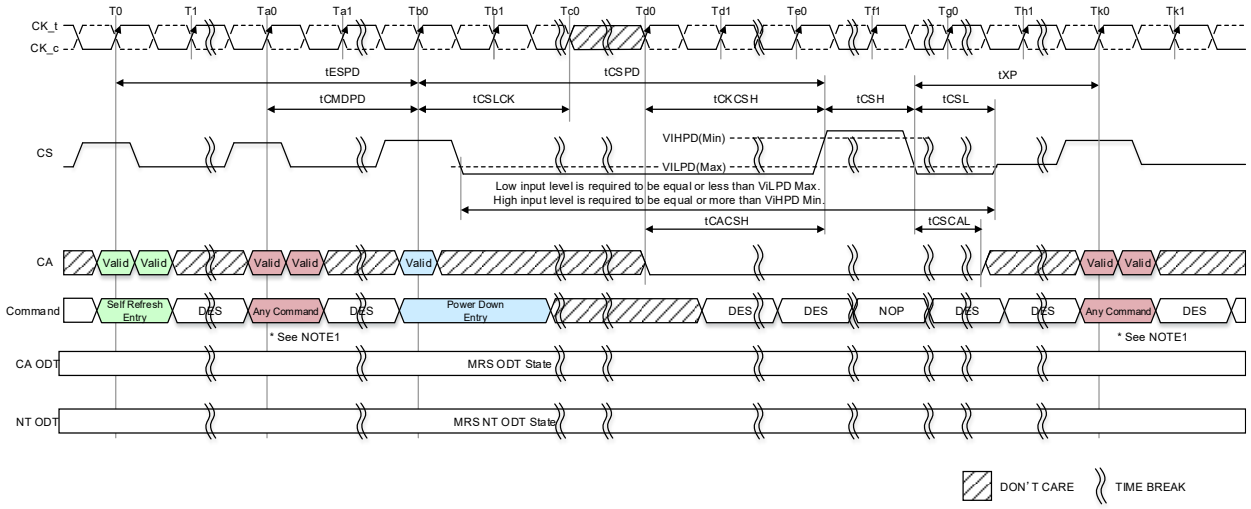

NOTE 1 PDE, DSM, MRR, CAS, DES, SRX, MPC, RFF, WFF, RDC, MRW except PASR setting is allowed during Self Refresh (No Power Down). The operation by command issued prior to Power Down Entry (PDE) is required to be completed before clock frequency or stop clocking or turning off VDDQ.

NOTE 2 Input clock frequency can be changed or the input clock can be stopped or floated after tCSLCK is satisfied and during Power Down, provided that upon exiting Power Down, the clock is stable and within specified limits for a minimum of tCKCSH of stable clock prior to Power Down exit and the clock frequency is between the minimum and maximum specified frequency for the speed grade in use.

NOTE 3 DES commands are shown for ease of illustration; other commands may be valid at these times where the CA input is indicated "don't care" together.

Figure 120 — Command input timing after Power Down Exit during Self Refresh

7.5.4.3 Self Refresh AC Timing Table

Table 213 — Self Refresh AC Timing

Parameters	Symbol	Min/ Max	Value	Unit	Note
Self Refresh Timing					
Delay from SRE command to PDE	tESPD	Min.	2	nCK	
Minimum Self Refresh Time (Entry to Exit)	tSR	Min.	Max(15ns, 2nCK)	ns	1
Exit Self Refresh to Valid commands	tXSR	Min.	tRFCab + Max(7.5ns, 2nCK)	ns	1

NOTE 1 Delay time has to satisfy both analog time(ns) and clock count(nCK). It means that tESPD will not expire until CK has toggled through at least 2 full cycles (2*nCK) and 1.75ns has transpired. The case which 2nCK is applied to is shown below.

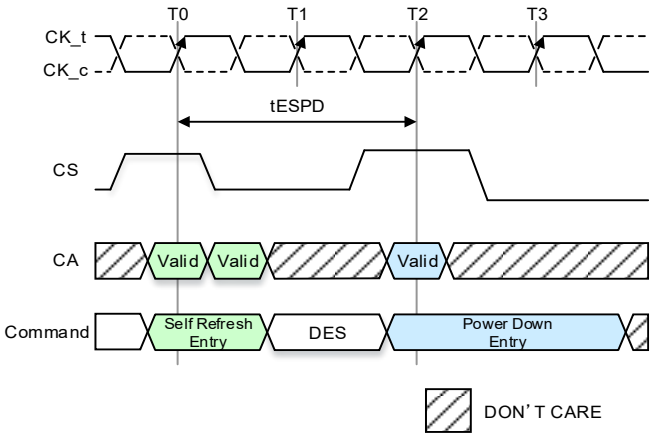

7.5.4.4 MRR, MRW, RFF, WFF, RDC, MPC Command during tXSR

Mode Register Read (MRR), Mode Register Write (MRW), Write FIFO (WFF), Read FIFO (RFF), Read DQ Calibration (RDC) and Multi Purpose Command (MPC) can be issued during tXSR period.

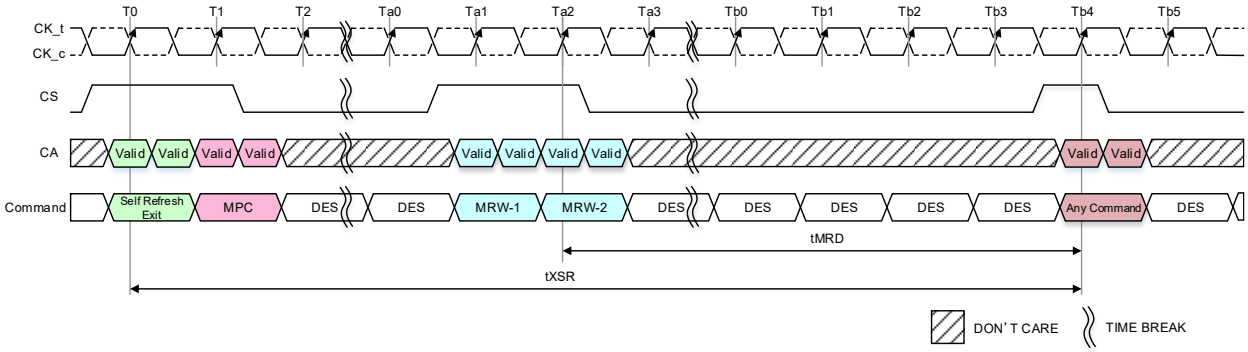

NOTE 1 MPC and MRW command are shown in this figure, any combination of MRR, MRW, WFF, RFF, RDC and MPC is allowed during tXSR period.
NOTE 2 Any command also includes MRR, MRW, WFF, RFF, RDC and all MPC command.
NOTE 3 DES commands are shown for ease of illustration; other commands may be valid at these times.

Figure 121 — MRR, MRW, WFF, RFF, RDC and MPC Commands Issuing Timing during tXSR

Table 214 — Self Refresh Exit (SRX) Command Timing Constraints

Current Command	Next Command	Timing Constraints (nCK)		Note
		Min	Max	
Self Refresh Exit (SRX)	MODE REGISTER READ (MRR)	1	-	
	MODE REGISTER WRITE-1 (MRW-1)	1	-	
	MODE REGISTER WRITE-2 (MRW-2)	illegal	illegal	
	WRITE FIFO (WFF)	1	-	
	READ FIFO (RFF)	1	-	
	READ DQ CALIBRATION (RDC)	1	-	
	MULTI PURPOSE COMMAND (MPC)	1	-	

7.5.5 Partial Array Self Refresh (PASR)

7.5.5.1 PASR Segment Masking

The LPDDR5 SDRAM adopts 8 bank base refresh schemes. A segment in each bank for 8 bank bases of the LPDDR5 SDRAM can be independently configured whether a Self Refresh operation is taking place. One mode register unit of 8 bits, accessible via MRW command, is assigned to program the segment masking status of each segment up to 8 segments. For segment masking bit assignments, see Mode Register 23.
The mask bit to the segment controls a refresh operation of entire memory within the segment. When the segment is masked via MRW, a refresh operation to the entire segment is blocked and data retention by a segment is not guaranteed in Self Refresh mode. To enable a refresh operation to the segment, a coupled mask bit has to be programmed, “unmasked”.

Table 215 - Example of Segment Masking use in LPDDR5 SDRAM

	Segment Mask (MR23)	Bank 0	Bank 1	Bank 2	Bank 3	Bank 4	Bank 5	Bank 6	Bank 7
Segment 0	0								
Segment 1	0								
Segment 2	1	M	M	M	M	M	M	M	M
Segment 3	0								
Segment 4	0								
Segment 5	0								
Segment 6	0								
Segment 7	1	M	M	M	M	M	M	M	M

NOTE 1 This table illustrates an example. When a refresh operation to segment 2 and segment 7 are masked.

7.5.6 Partial Array Refresh Control (PARC)

LPDDR5 SDRAM supports Partial Array Refresh Control (PARC) to reduce IDD5 power consumption.
If PARC MR25 OP[6]=1_B, LPDDR5 SDRAM skips the refresh of segment where defined PASR Segment Mask: MR23 OP[7:0] when All bank or Per bank Refresh command is received.

7.5.7 Power Down

7.5.7.1 Power-Down Entry and Exit

Power-Down is entered by issuing Power-Down Entry Command. Power-Down Entry Command is issued by holding CS HIGH, CA[5:0] LOW and CA6 HIGH at the first rising edge of the clock. Power-Down Entry Command must not be issued while the following operations are in progress:

- Mode Register Read
- Mode Register Write
- Read
- Write
- Mask Write
- VRCG High Current mode Entering/Exiting via MRW

And LPDDR5 SDRAM cannot be placed in Power Down state during following state and until those mode completely terminated (Self Refresh Entry with Power Down Entry command is contained in Power Down Entry command. See Command Truth Table for detail.).

- In Enhanced RDQS Training Mode: MR46 OP[0] =1_B
- In RDQS Toggle Mode: MR46 OP[1] =1_B
- In WCK2CK Leveling Mode: MR18 OP[6] =1_B
- In CBT: Command Bus Training Mode: MR16 OP[5:4] = 01_B, 10_B or 11_B
- In changing Physical Mode Register by Frequency Set Point function
- In PPR: Post Package Repair Mode: MR41 OP[4] =1_B
- In WCK-RDQS_t/Parity Training Mode: MR46 OP[2]=1_B
- In Read/Write-based WCK-RDQS_t Training mode: MR26 OP[7] =1_B
- From DCM start command to DCM stop command
- VREF(CA) Value setting via MRW: MR12 OP[6:0]
- VREF(DQ) Value setting via MRW: MR14 OP[6:0] and MR15 OP[6:0]

Power down entry command is not allowed to be next command of Write FIFO (WFF) command.

Power-Down Entry Command can be issued while any other operations such as row activation, Precharge, Auto Precharge or Refresh are in progress. The Power-Down IDD specification will not be applied until such operations are complete. Power-Down entry and exit are shown in **Figure 122**.

Entering Power-Down mode deactivates the input and output buffers, excluding CS and Reset_n. Clock input is required after Power-Down Entry Command is issued, this timing period is defined as tCSLCK. Power-Down Entry Command will result in deactivation of all input receivers except CS and Reset_n after tCSLCK has expired. In Power-Down mode, CS must be held LOW and all other input signals except Reset_n are “Don't Care”. CS LOW is required to be maintained until tCSPDmin is satisfied. During Power Down mode, CS Rx input level applies Asynchronous mode definition.

VDDQ can be turned off during Power-Down mode. Prior to exiting Power-Down mode, VDDQ is required to be within its minimum/maximum operating range. Vref(CA) update timing (TBD ns) is required after the voltage (VDDQ) ramp up is completed for reliable operation.

No refresh operations are performed in Power-Down mode except Self-Refresh Power-Down and Deep Sleep Mode. The maximum duration in Power-Down mode is only limited by the refresh requirements outlined in the Refresh command section.

The Power-Down state is asynchronously exited when CS toggles. Power-Down Entry command can be re-issued with tXPmin after CS goes LOW. A valid, executable command can be applied with Power-Down exit latency tXP after CS goes LOW.

Clock frequency change or Clock Stop is inhibited during tCMDPD, tESPD, tCSLCK, tCKCSH, tXP, tMRWPD, tZQPD, tOSCPD, tERQX, tFC and tWLWCKOFF periods.

If Power-Down occurs when all banks are idle, this mode is referred to as idle Power-Down. If Power-Down occurs when there is a row active in any bank, this mode is referred to as active Power-Down. And if Power-Down occurs when Self Refresh is in progress, this mode is referred to as Self Refresh Power-Down in which the internal refresh is continuing in the same way as Self Refresh mode.

When CA, CK and/or CS ODT is enabled via MR11 OP[6:4] and also MR17 setting, the rank providing ODT will continue to terminate CA, CK bus in all DRAM states including Power-Down. CS ODT state goes OFF ignoring MRS ODT state after Power-Down Entry is issued and returns to MRS ODT state with Power-Down Exit.

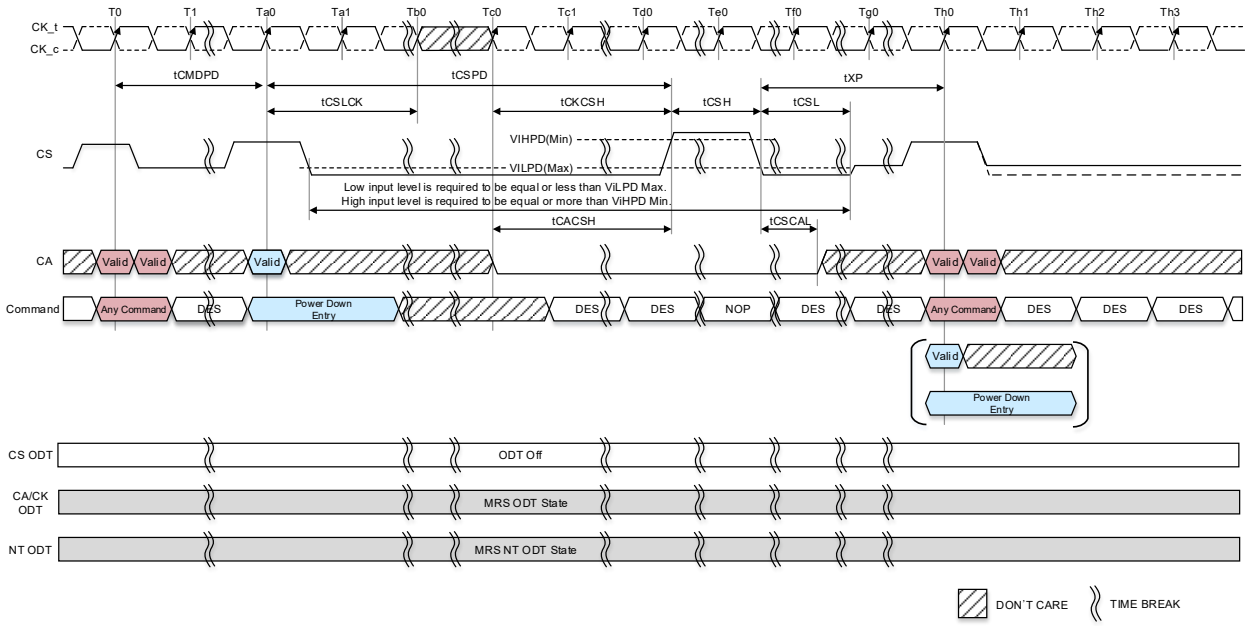

NOTE 1 DES commands are shown for ease of illustration; other commands may be valid at these times where the CA input is indicated "don't care" together.

NOTE 2 Input clock frequency can be changed or the input clock can be stopped or floated after tCSLCK is satisfied and during Power Down, provided that upon exiting Power Down, the clock stable and within specified limits for a minimum of tCKCSH of stable clock prior to Power Down exit and clock frequency is between the minimum and maximum specified frequency for the speed grade in use.

NOTE 3 The start point of tCSH and the end point of tCSPD/tCKCSH are crossover point of VIHPD(Min).

NOTE 4 The start point of tCSL/tXP and the end point of tCSL are crossover point of VILPD(Max).

NOTE 5 Power Down Entry command can be issued at Th0.

NOTE 6 CA input is required be Low during tCSH.

Figure 122 Basic Power-Down Entry and Exit Timing

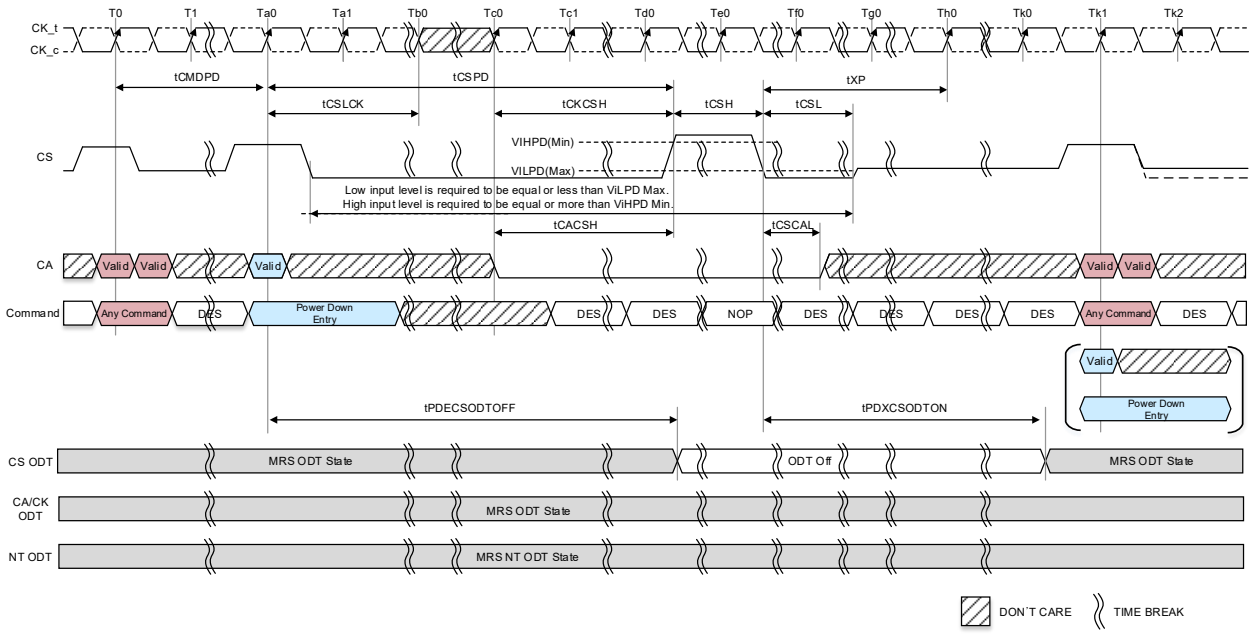

NOTE 1 DES commands are shown for ease of illustration; other commands may be valid at these times where the CA input is indicated "don't care" together.

NOTE 2 Input clock frequency can be changed or the input clock can be stopped or floated after tCSLCK is satisfied and during Power Down, provided that upon exiting Power Down, the clock stable and within specified limits for a minimum of tCKCSH of stable clock prior to Power Down exit and clock frequency is between the minimum and maximum specified frequency for the speed grade in use.

NOTE 3 The start point of tCSH and the end point of tCSPD/tCKCSH are crossover point of VIHPD(Min).

NOTE 4 The start point of tCSL/tXP and the end point of tCSL are crossover point of VILPD(Max).

NOTE 5 Power Down Entry command can be issued at Tk1: tPDXCSODTON is required to be expired.

NOTE 6 CA input is required be Low during tCSH.

Figure 123 - Basic Power-Down Entry and Exit Timing: CS ODT Enable

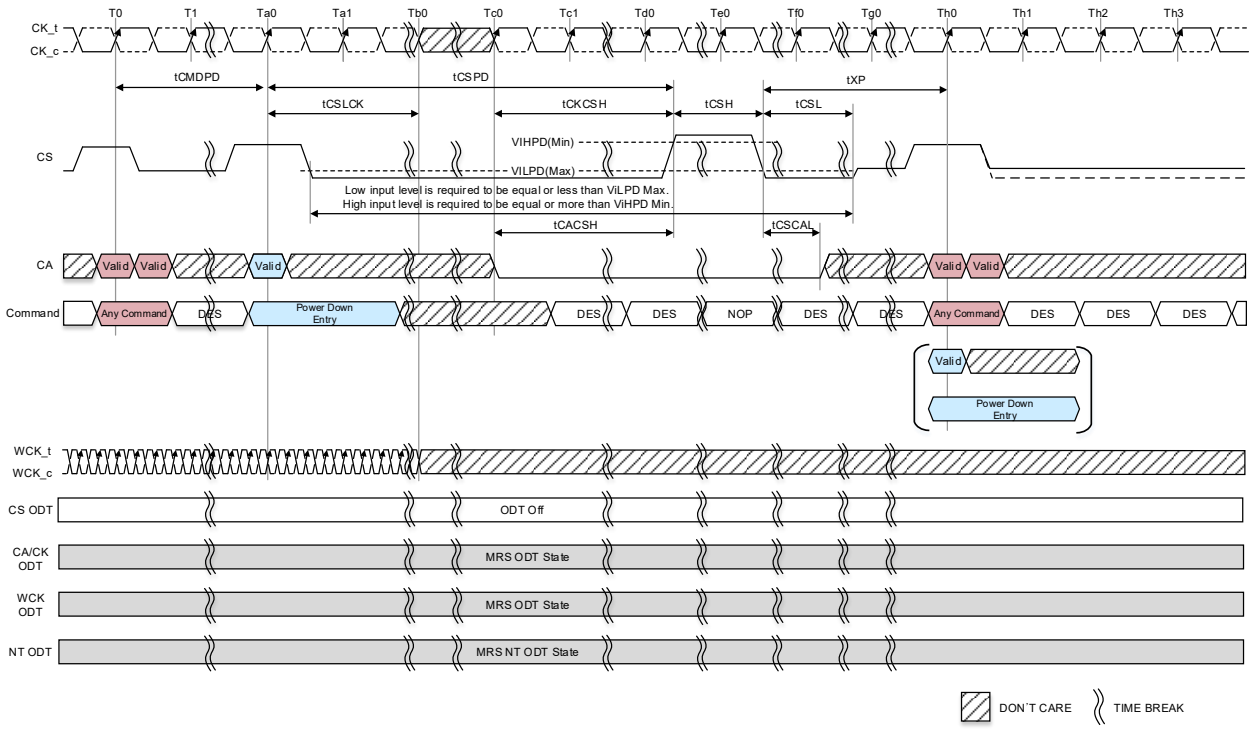

NOTE 1 DES commands are shown for ease of illustration; other commands may be valid at these times where the CA input is indicated "don't care" together.
NOTE 2 tWCK2CK is 0ps in this instance.
NOTE 3 Input clock frequency can be changed or the input clock can be stopped or floated after tCSLCK is satisfied and during Power Down, provided that upon exiting Power Down, the clock stable and within specified limits for a minimum of tCKCSH of stable clock prior to Power Down exit and clock frequency is between the minimum and maximum specified frequency for the speed grade in use.
NOTE 4 WCK input is required to be continued at least the end of tCSLCK.
NOTE 5 The start point of tCSH and the end point of tCSPD/tCKCSH are crossover point of VIHPD(Min).
NOTE 6 The start point of tCSL/tXP and the end point of tCSL are crossover point of VILPD(Max).
NOTE 7 Power Down Entry command can be issued at Th0.
NOTE 8 CA input is required be Low during tCSH.

Figure 124 – Basic Power-Down Entry and Exit Timing during WCK2CK Sync state

In the following cases, the basic timing which is shown in **Figure 122** for the command interval to Power Down and/or clock stop/frequency change timing do not apply.

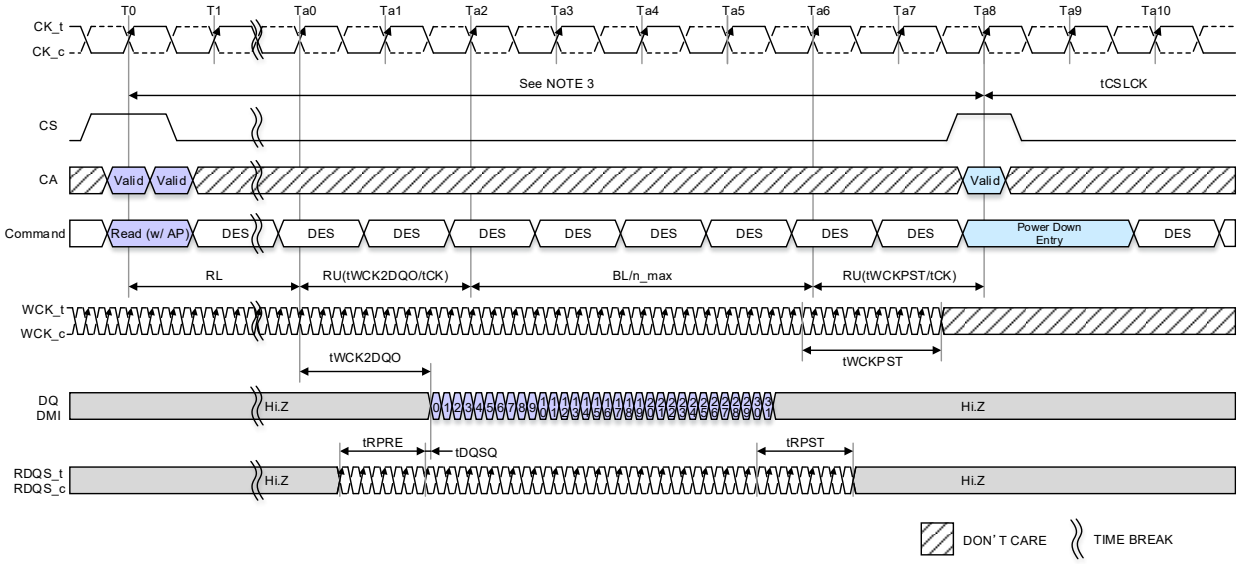

NOTE 1 tWCK2CK is 0ps in this instance.
NOTE 2 Assumption: tWCK2DQO=1900ps, tCK=1250ps, tRPST = 4.5nWCK, tWCKPST = 6.5nWCK
NOTE 3 RL+RU(tWCK2DQO(max)/tCK)+BL/n_max+RU(tWCKPST/tCK)
NOTE 4 tWCK2DQO(max) is applied tWCK2DQO_LF(max) or tWCK2DQO_HF(max) depending on MR18 OP[3]: WCK Frequency Mode setting.
MR18 OP[3]=0_B: tWCK2DQO_LF(max) MR18 OP[3]=1_B: tWCK2DQO_HF(max)
NOTE 5 Input clock frequency can be changed or the input clock can be stopped or floated after tCSLCK from Power Down command.

Figure 125 - Read and Read with AP to Power-Down Entry: 8B Mode CKR=4:1, NT-ODT=Disable

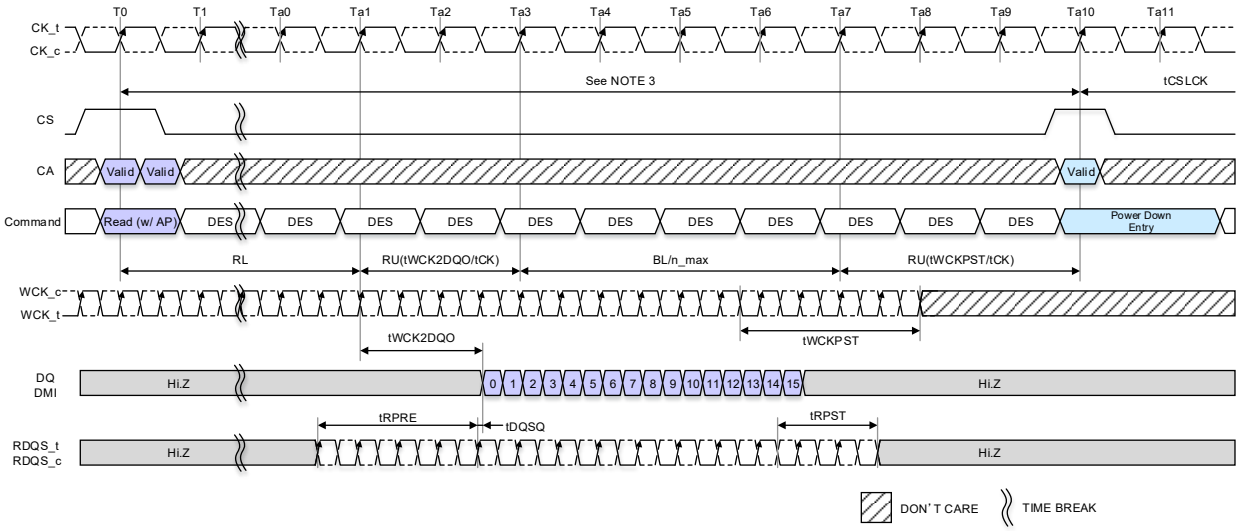

NOTE 1 tWCK2CK is 0ps in this instance.
NOTE 2 Assumption: tWCK2DQO=1900ps, tCK=1250ps, tRPST = 2.5nWCK, tWCKPST = 4.5nWCK
NOTE 3 RL+RU(tWCK2DQO(max)/tCK)+BL/n_max+RU(tWCKPST/tCK)
NOTE 4 tWCK2DQO(max) is applied tWCK2DQO_LF(max) or tWCK2DQO_HF(max) depending on MR18 OP[3]: WCK Frequency Mode setting.
MR18 OP[3]=0_B: tWCK2DQO_LF(max) MR18 OP[3]=1_B: tWCK2DQO_HF(max)
NOTE 5 Input clock frequency can be changed or the input clock can be stopped or floated after tCSLCK from Power Down command.

Figure 126 - Read and Read with AP to Power-Down Entry: 16B Mode CKR=2:1, NT-ODT=Disable

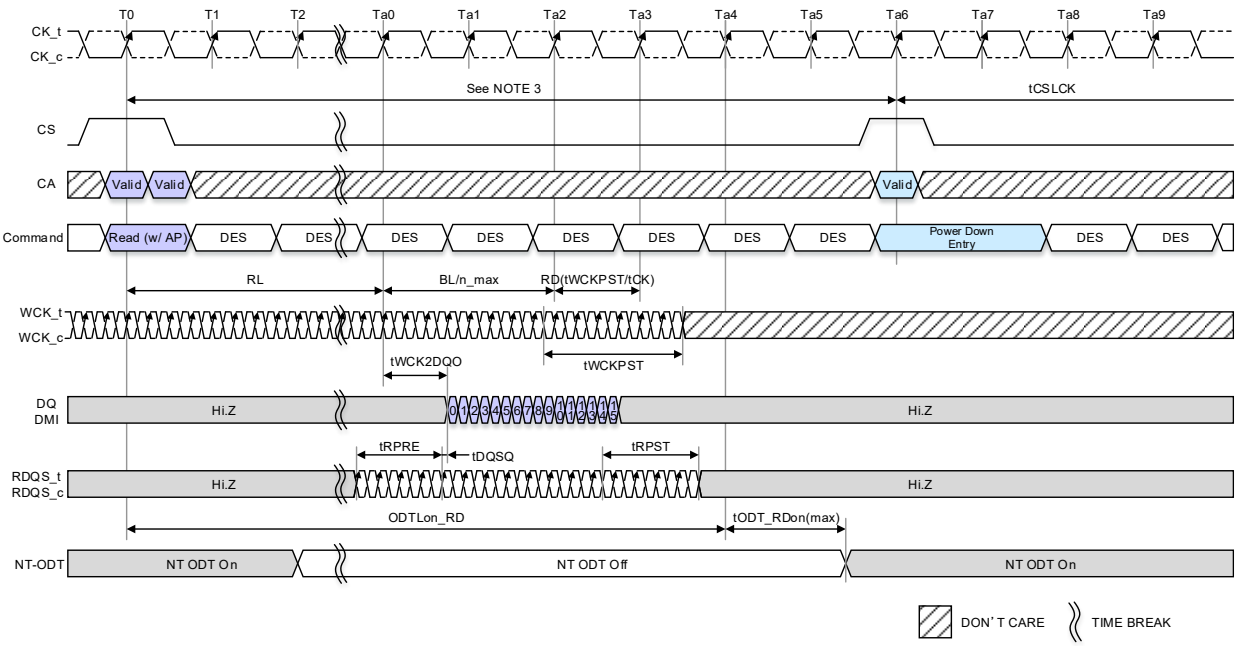

NOTE 1 tWCK2CK is 0ps in this instance.
NOTE 2 tRPST = 4.5nWCK, tWCKPST = 6.5nWCK
NOTE 3 ODTLon_RD+RU(tODT_RDon(max)/tCK)
NOTE 4 Input clock frequency can be changed or the input clock can be stopped or floated after tCSLCK from Power Down command.

Figure 127 - Read with AP to Power-Down Entry: 16B Mode CKR=4:1 NT-ODT=Enable

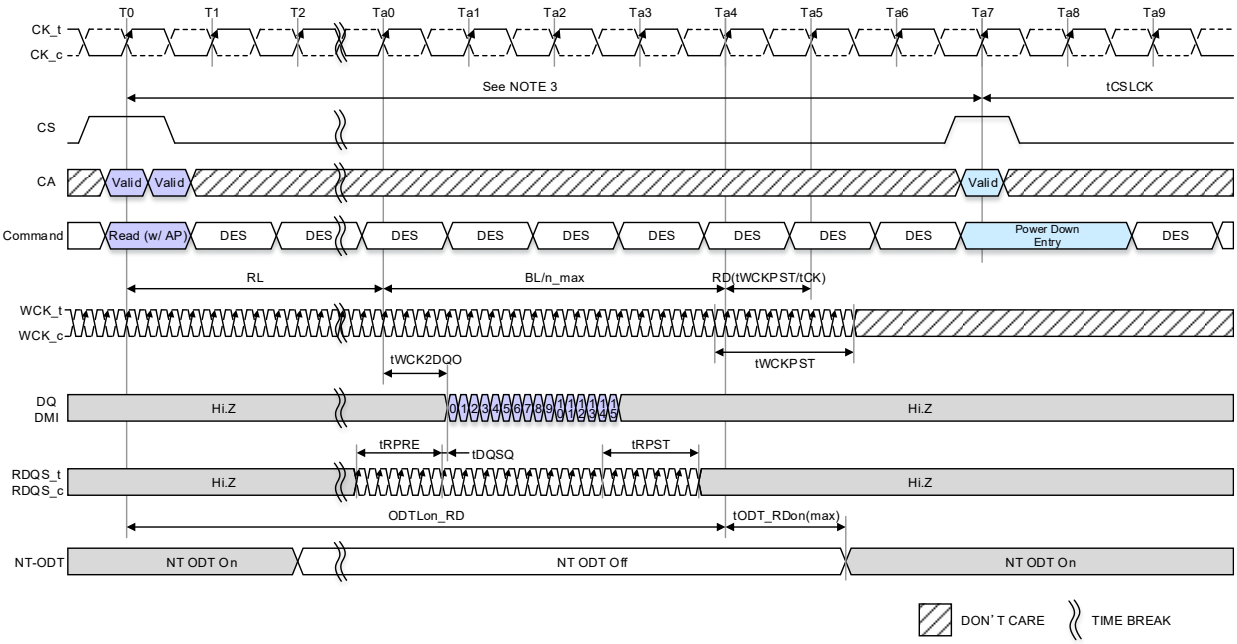

NOTE 1 tWCK2CK is 0ps in this instance.
NOTE 2 tRPST = 4.5nWCK, tWCKPST = 6.5nWCK
NOTE 3 ODTLon_RD+RU(tODT_RDon(max)/tCK) +1nCK
NOTE 4 Input clock frequency can be changed or the input clock can be stopped or floated after tCSLCK from Power Down command.

Figure 128 - Read and Read with AP to Power-Down Entry: BG Mode CKR=4:1 NT-ODT=Enable

Read and Read with AP to Power-Down Entry timing also applies following case.

- Read FIFO command to Power Down entry command
- Read DQ Calibration command to Power Down entry command

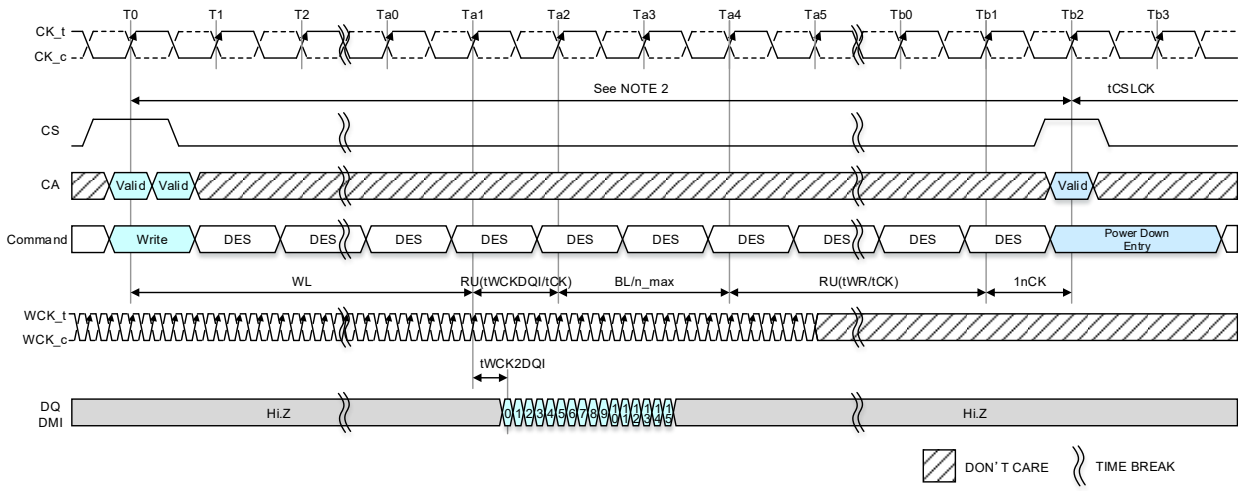

NOTE 1 Power Down Entry Command is not allowed until the end of the burst operation.
NOTE 2 Minimum Delay time from Write Command or Masked Write Command to Power Down Entry is as follows.
WL + RU(tWCKDQI(max)/tCK) + BL/n_max + RU(tWR/tCK) + 1nCK:
RU(tWR/tCK) means Max("Analog value of tWR"/tCK(avg), 3nCK).
NOTE 3 tWCK2DQI(max) is applied tWCK2DQI_LF(max) or tWCK2DQI_HF(max) depending on MR18 OP[3]: WCK Frequency Mode setting.
MR18 OP[3]=0_B: tWCK2DQI_LF(max) MR18 OP[3]=1_B: tWCK2DQI_HF(max)
NOTE 4 This Timing is applied regardless of DQ ODT Disable/Enable setting: MR11 OP[2:0].
NOTE 5 This timing diagram only applies to the Write and Masked Write Commands without Auto Precharge.
NOTE 6 Input clock frequency can be changed or the input clock can be stopped or floated after tCSLCK from Power Down command.

Figure 129 - Write and Masked Write to Power-Down Entry

Write and Masked Write to Power-Down Entry timing also applies following case.

- From a Write command following a CAS Write X command to Power Down entry command.

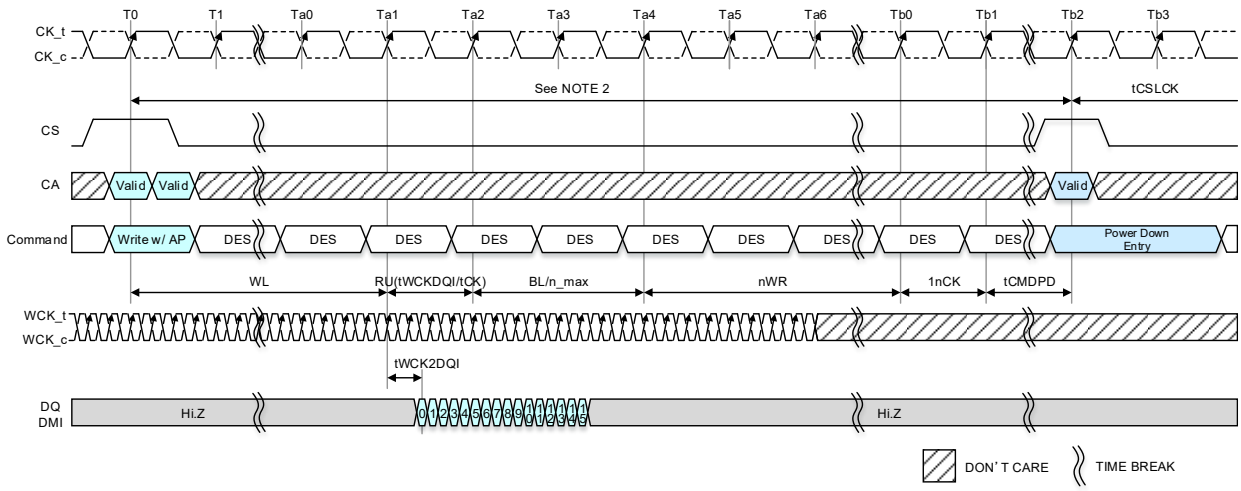

NOTE 1 Power Down Entry Command is not allowed until the end of the burst operation.
NOTE 2 Minimum Delay time from Write with Auto Precharge Command or Masked Write with Auto Precharge Command to Power Down Entry Command is more than as follows:
WL + RU(tWCKDQI(max)/tCK) + BL/n_max + nWR + 1nCK + tCMDPD
NOTE 3 tWCK2DQI(max) is applied tWCK2DQI_LF(max) or tWCK2DQI_HF(max) depending on MR18 OP[3]: WCK Frequency Mode setting.
MR18 OP[3]=0_B: tWCK2DQI_LF(max) MR18 OP[3]=1_B: tWCK2DQI_HF(max)
NOTE 4 tCMDPD is attributed to internal Precharge command.
NOTE 5 This timing is applied regardless of DQ ODT Disable/Enable setting: MR11[OP2:0].
NOTE 6 Input clock frequency can be changed or the input clock can be stopped or floated after tCSLCK from Power Down command.

Figure 130 - Write with AP and Masked Write with Auto Precharge to Power-Down Entry

Write and Masked Write to Power-Down Entry timing also applies following case.

- From a Write with AP command following a CAS Write X command to Power Down entry command.

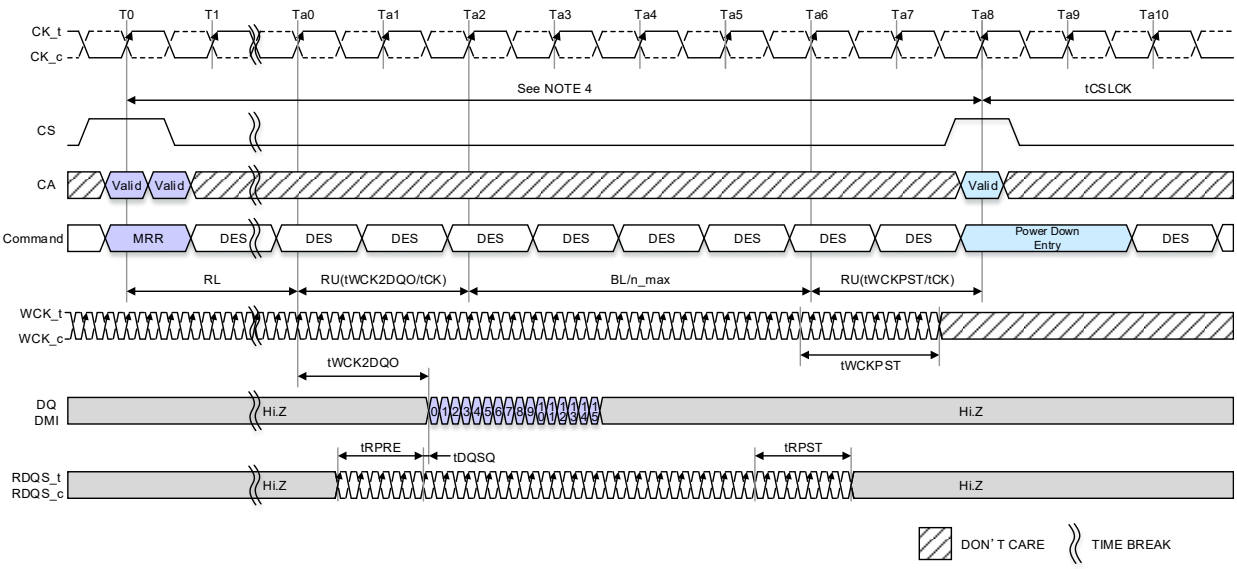

NOTE 1 tWCK2CK is 0ps in this instance.
NOTE 2 Power Down Entry Command is not allowed until the end of the burst operation.
NOTE 3 Assumption: tWCK2DQO=1900ps, tCK=1250ps, tRPST = 4.5nWCK, tWCKPST = 6.5nWCK
NOTE 4 RL+RU(tWCK2DQO(max)/tCK)+BL/n_max+RU(tWCKPST/tCK)
NOTE 5 tWCK2DQO(max) is applied tWCK2DQO_LF(max) or tWCK2DQO_HF(max) depending on MR18 OP[3]: WCK Frequency Mode setting.
MR18 OP[3]=0_B: tWCK2DQO_LF(max) MR18 OP[3]=1_B: tWCK2DQO_HF(max)
NOTE 6 Input clock frequency can be changed or the input clock can be stopped or floated after tCSLCK from Power Down command.

Figure 131 - Mode Register Read to Power-Down Entry: 8B Mode CKR=4:1

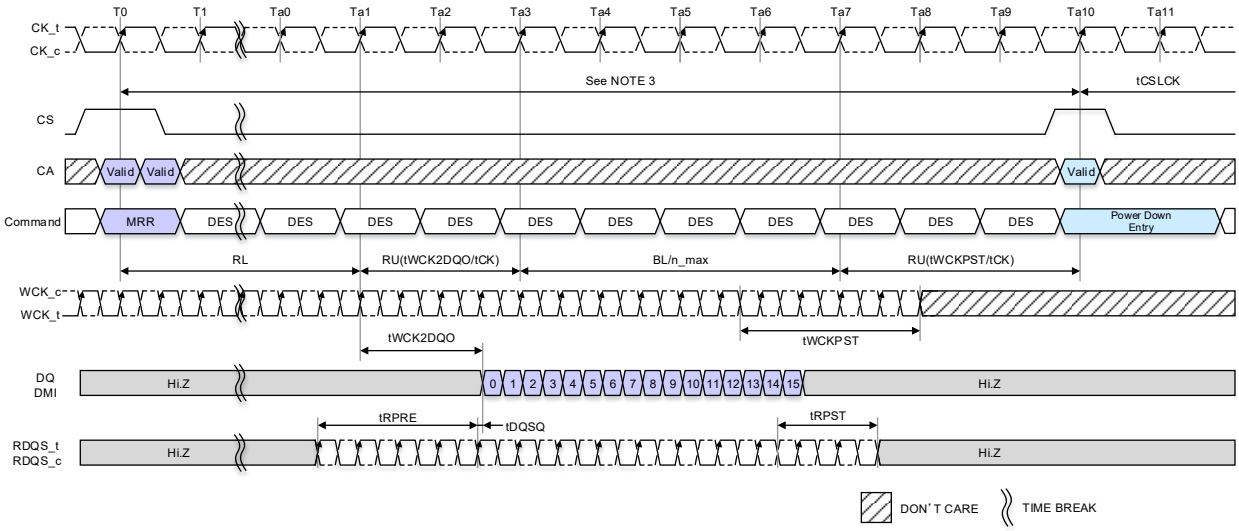

NOTE 1 tWCK2CK is 0ps in this instance.
NOTE 2 Assumption: tWCK2DQO=1900ps, tCK=1250ps, tRPST = 2.5nWCK, tWCKPST = 4.5nWCK
NOTE 3 RL+RU(tWCK2DQO(max)/tCK)+BL/n_max+RU(tWCKPST/tCK)
NOTE 4 tWCK2DQO(max) is applied tWCK2DQO_LF(max) or tWCK2DQO_HF(max) depending on MR18 OP[3]: WCK Frequency Mode setting.
MR18 OP[3]=0_B: tWCK2DQO_LF(max) MR18 OP[3]=1_B: tWCK2DQO_HF(max)
NOTE 5 Input clock frequency can be changed or the input clock can be stopped or floated after tCSLCK from Power Down command.

Figure 132 - Mode Register Read to Power-Down Entry: 16B Mode CKR=2:1

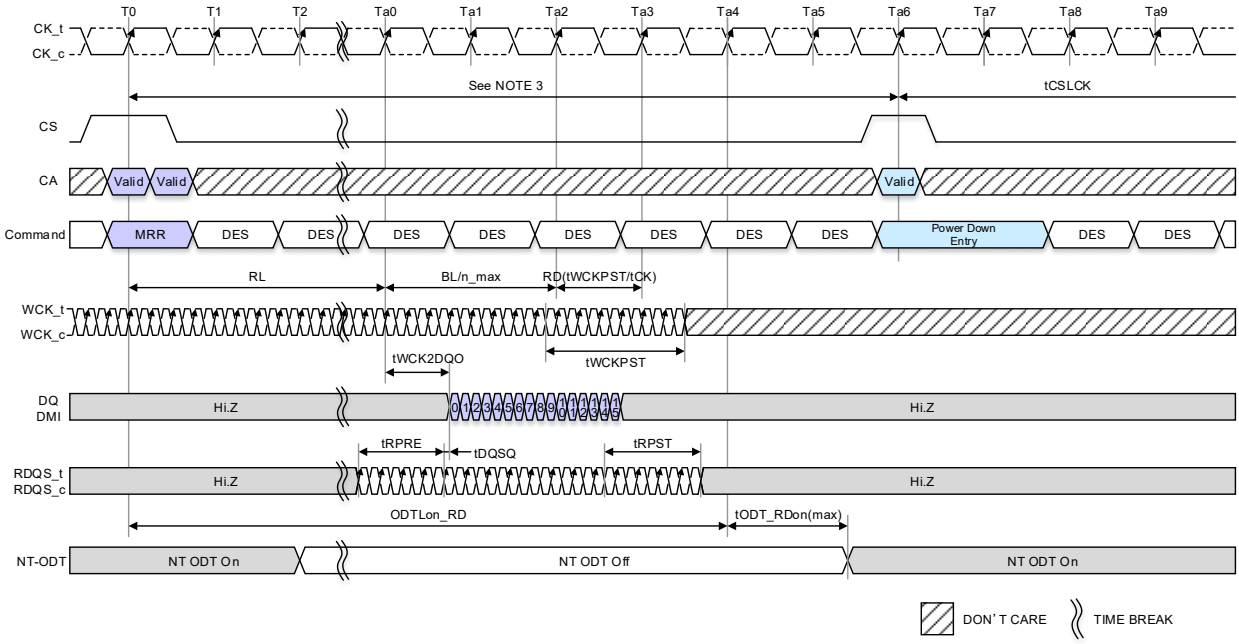

NOTE 1 tWCK2CK is 0ps in this instance.
NOTE 2 tRPST = 4.5nWCK, tWCKPST = 6.5nWCK
NOTE 3 ODTLon_RD+RU(tODT_RDon(max)/tCK)
NOTE 4 Input clock frequency can be changed or the input clock can be stopped or floated after tCSLCK from Power Down command.

Figure 133 - Mode Register Read to Power-Down Entry: 16B Mode CKR=4:1 NT-ODT=Enable

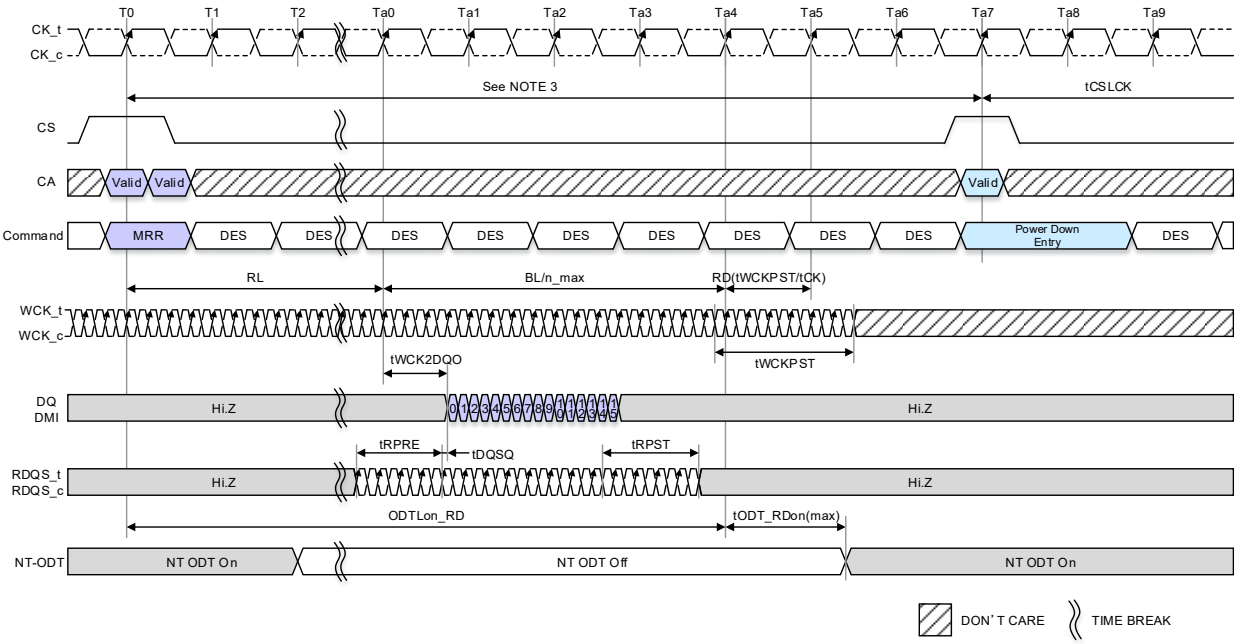

NOTE 1 tWCK2CK is 0ps in this instance.
NOTE 2 tRPST = 4.5nWCK, tWCKPST = 6.5nWCK
NOTE 3 ODTLon_RD+RU(tODT_RDon(max)/tCK) +1nCK
NOTE 4 Input clock frequency can be changed or the input clock can be stopped or floated after tCSLCK from Power Down command.

Figure 134 - Mode Register Read to Power-Down Entry: BG Mode CKR=4:1 NT-ODT=Enable

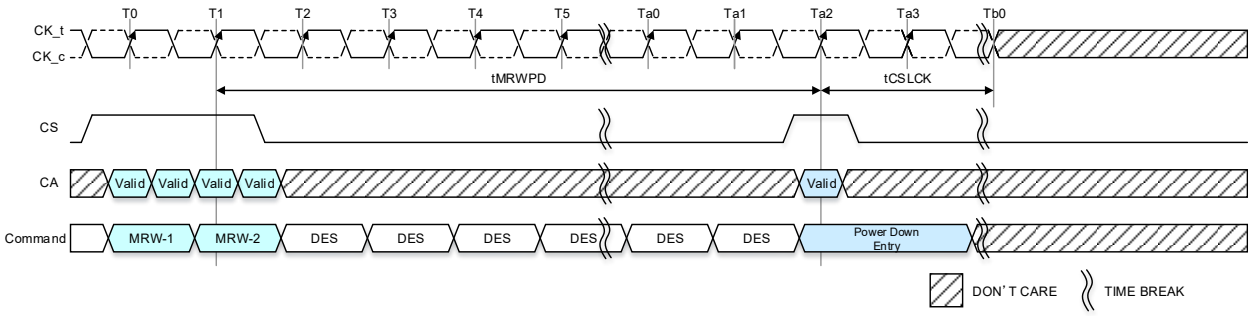

NOTE 1 tMRWPD is required to be satisfied.
NOTE 2 This timing is the general definition for Power Down Entry after Mode Register Write Command. When a Mode Register Write Command changes a parameter or starts an operation that requires special timing longer than tMRWPD, that timing is required to be satisfied before Power Down Entry Command is issued. Changing the V_{REF}(DQ) value is one example, in this case the appropriate V_{REF}_time Short/Middle/Long is required to be satisfied.
NOTE3 MRW-1/2 command includes DCM stop command.

Figure 135 - Mode Register Write to Power Down Entry

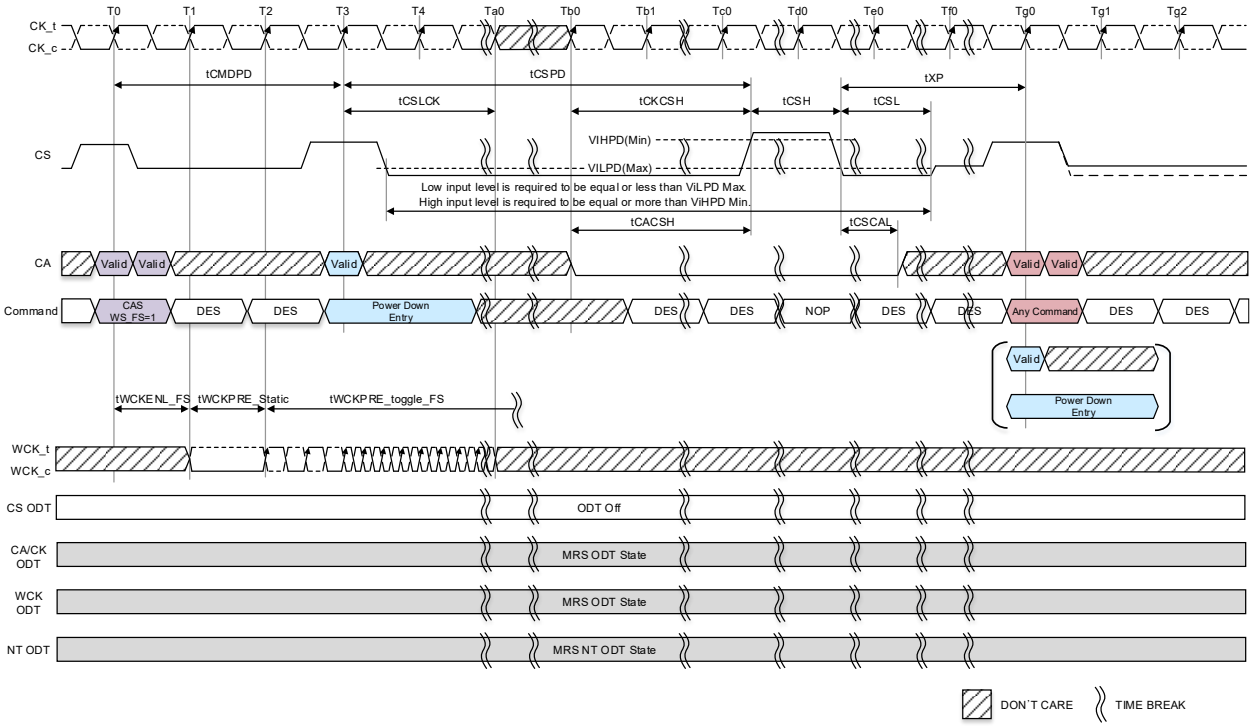

NOTE 1 tWCK2CK is 0ps in this instance
NOTE 2 tWCKENL_FS=1nCK, tWCKPRE_Static=1nCK
NOTE 3 WCK input is required to be continued at least the end of tCSLCK.

Figure 136 – CAS(WS_FS) to Power Down Entry

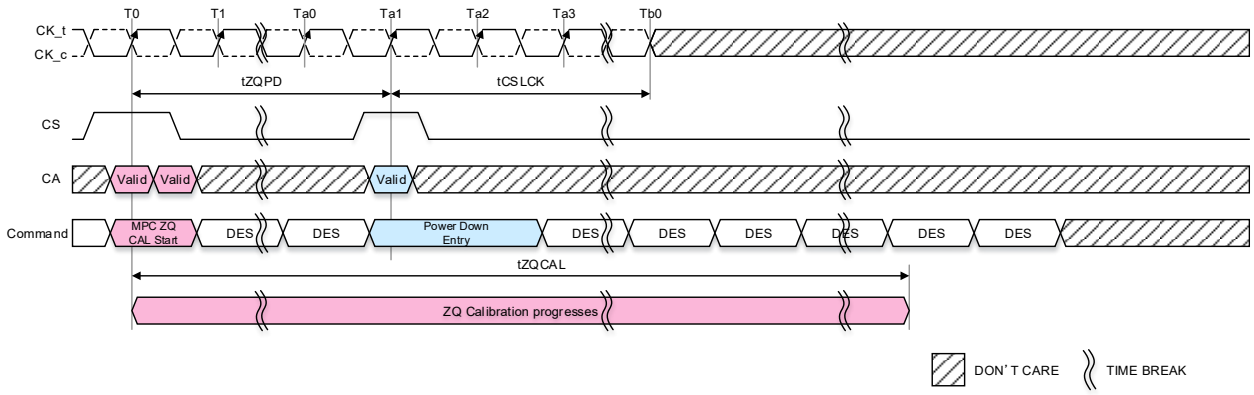

NOTE 1 ZQ Calibration continues if Power Down Entry Command is issued after tZQPD is satisfied.

Figure 137 - Multi Purpose Command for Start ZQ Calibration to Power-Down Entry

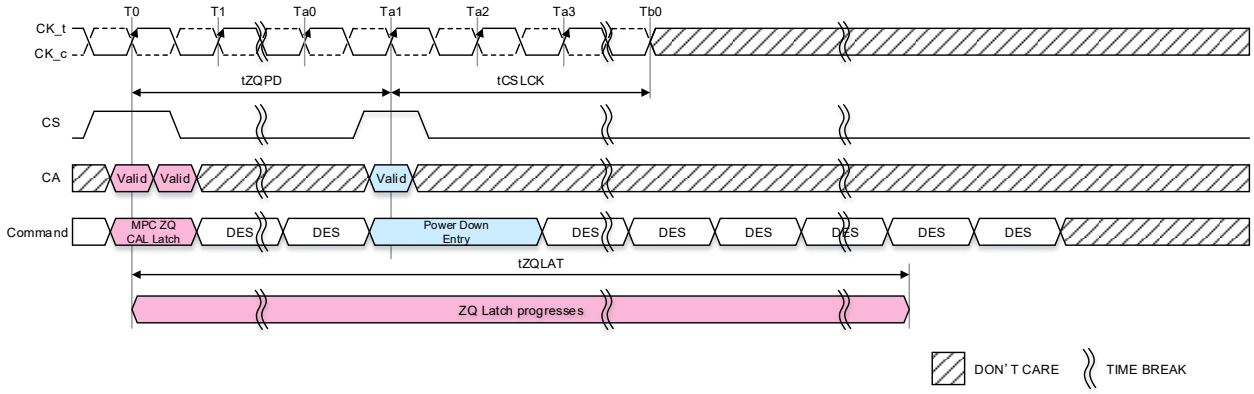

NOTE 1 ZQ Latch continues if Power Down Entry Command is issued after tZQPD is satisfied.

Figure 138 - Multi Purpose Command for ZQ Latch Command to Power-Down Entry

Power Down Entry command can be issued after tCMDPD is satisfied, even though the Oscillator is running. However, in this case, the value of Oscillator Count in MR35/36 (38/39) will be lost. If the value of Oscillator Count in Mode Register is to be retained, the entering power down timing should satisfy the following timing.

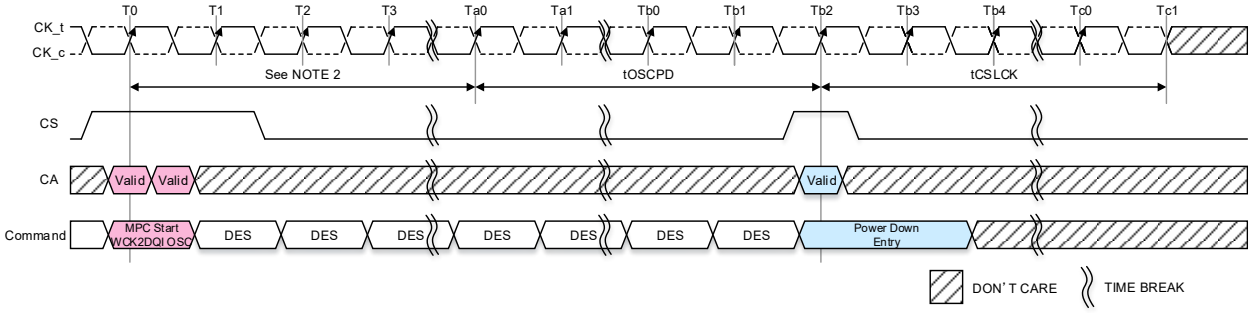

NOTE 1 WCK2DQI interval timer run time setting: MR37 OP[7:0]≠00000000B.
NOTE 2 Setting counts of WCK2DQI interval timer run time setting: MR37 OP[7:0]

Figure 139 - MPC for Start WCK2DQI Interval Oscillator to Power-Down Entry

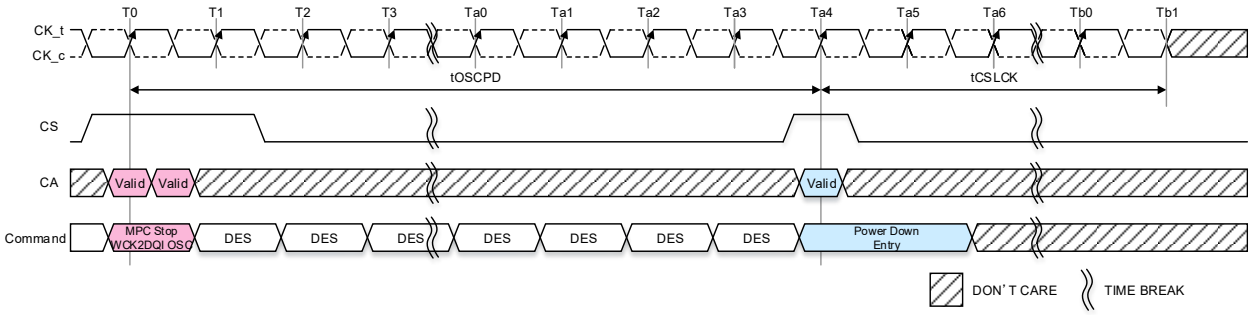

NOTE 1 WCK2DQI interval timer run time setting: MR37 OP[7:0]=00000000B.

Figure 140 - MPC for Stop WCK2DQI Interval Oscillator to Power-Down Entry

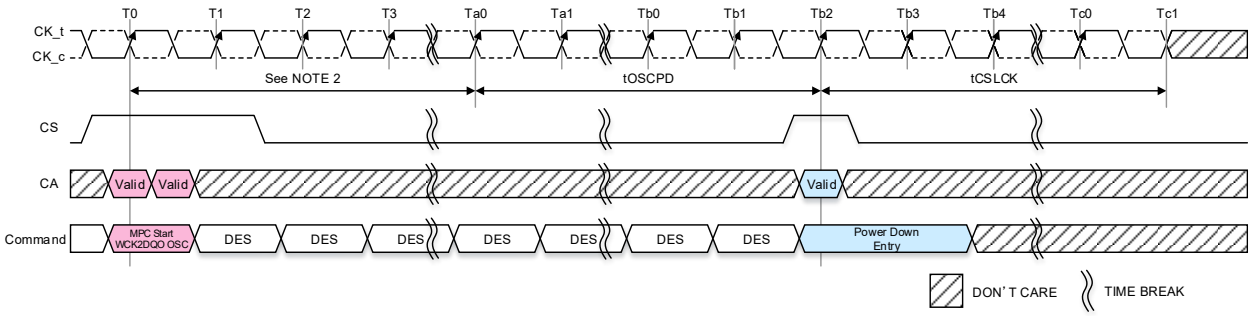

NOTE 1 WCK2DQO interval timer run time setting: MR40 OP[7:0]≠00000000B.
NOTE 2 Setting counts of WCK2DQO interval timer run time setting: MR40 OP[7:0]

Figure 141 - MPC for Start WCK2DQO Interval Oscillator to Power-Down Entry

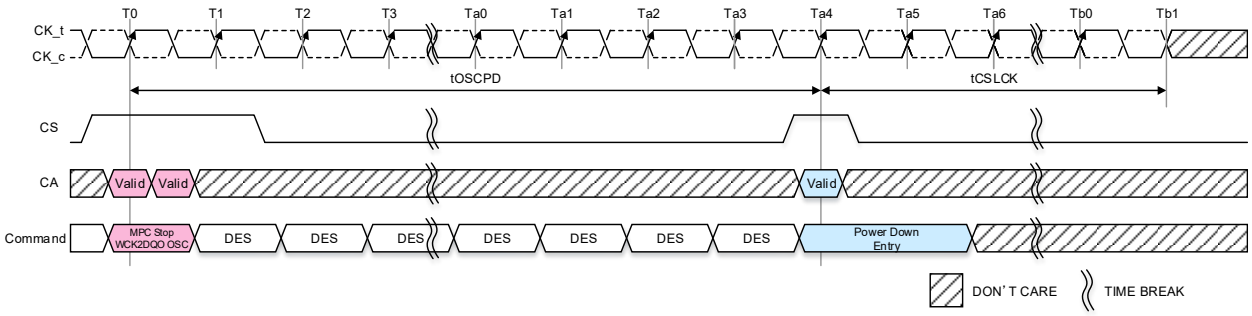

NOTE 1 WCK2DQO interval timer run time setting: MR40 OP[7:0]=00000000_B.

Figure 142 - MPC for Stop WCK2DQO Interval Oscillator to Power-Down Entry

Table 216 - Power Down AC Timing

Parameter	Symbol	Min/ Max	Data Rate	Unit	Note
Power-Down Timing					
Delay time from PDE to CS goes High	tCSPD	Min.	10.0ns + 1tCK	ns	1,2
Delay from valid command to PDE	tCMDPD	Min.	3nCK	nCK	3
Valid Clock Requirement after PDE	tCSLCK	Min.	Max(5ns, 3nCK)	ns	1
Valid Clock Requirement before CS goes High	tCKCSH	Min.	2nCK	nCK	
Valid Low Requirement for CA before CS goes High	tCACSH	Min	1.75ns	ns	
Exit Power-Down to next valid command delay	tXP	Min.	Max(7ns, 3nCK)	ns	1
Minimum CS High Pulse width @ PDX	tCSH	Min.	3	ns	
Minimum CS Low Duration time @ PDX	tCSL	Min.	4	ns	
Minimum CA Low Duration time @ PDX	tCSCAL	Min	1.75	ns	
Delay from MRW command to PDE	tMRWPD	Min.	Max(14ns, 6nCK)	ns	1,4
Delay from ZQ Calibration Start/Latch Command to PDE	tZQPD	Min.	3nCK	ns	
Delay from MPC OSC Start/Stop Command to PDE	tOSCPD	Min	Max(40ns,8nCK)	ns	
Delay from PD/DSM Entry to CS ODT OFF	tPDECSODTOFF	Max	10ns + 1tCK	ns	2
Delay from Power Down Exit to CS ODT ON	tPDXCSODTON	Max	20	Ns	

NOTE 1 Delay time has to satisfy both analog time(ns) and clock count(nCK).
For example, tCSLCK will not expire until CK has toggled through at least 3 full cycles(3*tCK) and 5ns has transpired.
The case which 3nCK is applied to is shown below.

NOTE 2 The tCK value where is the operating frequency at issuing the PDE command.

NOTE 3 The SRX command is included in the valid command and the SRE command is not included in the valid command.

NOTE 4 Following MR change applies special delay time. See Table 219 for detail.
VREF(CA) Setting: MR12 OP[6:0]
VREF Current Generator (VRCG): MR16 OP[6]

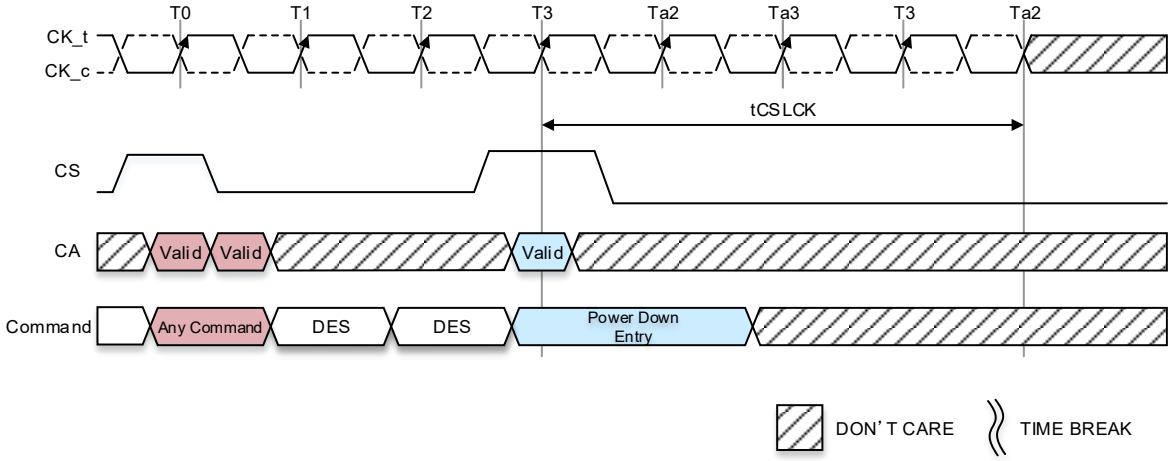

Table 217 - Read and Read w/ Precharge to Power Down Entry: NT ODT is Disabled

RDQS Mode	CKR	Bank/BG ORG.	Read and Read w/ Precharge to Power Down Entry	Unit
Disable	2:1	16B	RL+RU(tWCK2DQO/tCK)+BL/n_max+RU(tWCKPST/tCK)	nCK
Disable	2:1	8B		
Disable	4:1	BG		
Disable	4:1	16B		
Disable	4:1	8B		
Enable	2:1	16B		
Enable	2:1	8B		
Enable	4:1	BG		
Enable	4:1	16B		
Enable	4:1	8B		

NOTE 1 tWCK2DQO(max) is applied tWCK2DQO_LF(max) or tWCK2DQO_HF(max) depending on MR18 OP[3]: WCK Frequency Mode setting.
MR18 OP[3]=0_B: tWCK2DQO_LF(max)
MR18 OP[3]=1_B: tWCK2DQO_HF(max)

Table 218 - Read and Read w/ Precharge to Power Down Entry: NT ODT is Enabled

RDQS Mode	CKR	Bank/BG ORG.	Read and Read w/ Precharge to Power Down Entry	Unit
Disable	2:1	16B	ODTLon_RD+RU(tODT_RDon(max)/tCK)+2	nCK
Disable	2:1	8B		
Disable	4:1	BG	ODTLon_RD+RU(tODT_RDon(max)/tCK)+2	nCK
Disable	4:1	16B	ODTLon_RD+RU(tODT_RDon(max)/tCK)	nCK
Disable	4:1	8B		
Enable	2:1	16B	ODTLon_RD+RU(tODT_RDon(max)/tCK)	nCK
Enable	2:1	8B		
Enable	4:1	BG	ODTLon_RD+RU(tODT_RDon(max)/tCK)+1	nCK
Enable	4:1	16B	ODTLon_RD+RU(tODT_RDon(max)/tCK)	nCK
Enable	4:1	8B		

Read and Read with AP to Power-Down Entry timing also applies following case.

- Read FIFO command to Power Down entry command
- Read DQ Calibration command to Power Down entry command
- Mode Register Read command to Power Down entry command

Table 219 – Special timing to Mode Register Write to Power Down Entry

Current Command	Next Command	Timing Constraints (Min)	Note
MRW to VREF(CA) Setting	Power Down Entry	tVREFCA_Long(max)=250ns tVREFCA_Short(max)=200ns tVREFCA_Weak(max)=1ms	
MRW to VREF(DQ) Setting		tVREFDQ_Long(max)=250ns tVREFDQ_Short(max)=200ns tVREFDQ_Weak(max)=1ms	
MRW to VRCG Enable		VRCG_ENABLE(max) = 150ns	
MRW to VRCG Disable		tVRCG_DISABLE(max) = 100ns	

7.5.8 Deep Sleep Mode

Deep Sleep Mode is an additional Self-Refresh mode with longer Entry/Exit times allowing the SDRAM to manage internal circuits for low current consumption (specified by IDD6DS). Deep Sleep Mode is entered by Self Refresh Entry Command defined by having CS HIGH, CA[2:0] LOW, CA3 HIGH, CA4 LOW, CA5 HIGH and CA6 HIGH at the rising edge of the clock and CS don't care, CA[4:0] Valid (Valid that means it is Logic Level, High or Low), CA5 HIGH and CA6 LOW at the falling edge of the clock. Deep Sleep Mode is only allowed when read data burst is completed and SDRAM is idle state or Self Refresh state. Deep Sleep Mode state diagram is shown below.

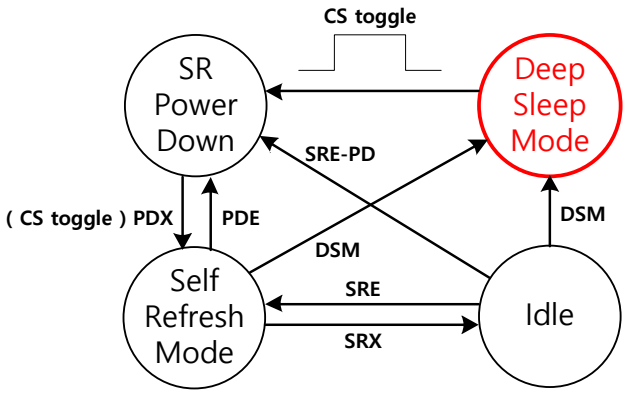

Figure 143 - Deep Sleep Mode state diagram

Once the SDRAM is entered in Deep Sleep Mode, it is recommended that Deep Sleep Mode is maintained for relatively long time to reduce Self Refresh current more efficiently. It is functionally possible that SDRAM is exited quickly after Deep Sleep Mode issued. But, the short Deep Sleep Mode duration time is of little avail to reduce IDD6 Current. tPDN_DSM is the minimum recommendatory time for Deep Sleep Mode duration.

In Deep Sleep Mode, SDRAM is almost turned off except for Self-refresh operation parts, it means that the data is retained during Deep Sleep mode. Deep Sleep Mode state is asynchronously exited to Self-Refresh Power Down mode when CS toggles HIGH (VIHPD (Min.)). The SDRAM must be satisfied tXSR_DSM to be fully re-powered up and then the SDRAM is ready for normal operations.

When CA, CK ODT is enabled via MR11 OP[6:4], MR17 OP[3] and OP[5], the rank providing ODT will continue to terminate CA, CK bus in all SDRAM states including Active Self-refresh, Self-refresh Power-down, Active Power-down, Idle Power-down and Deep Sleep Mode. CS ODT is enabled via MR17 OP[4], the rank providing ODT will continue to terminate the CS input in all DRAM states except Idle Power-down, Active Power-down, Self-refresh Power-down and Deep Sleep Mode. CS ODT state goes OFF ignoring MRS ODT state after Power-Down Entry is issued and returns to MRS ODT state with Power-Down Exit.
When NT-ODT is enabled via MR11 OP[3] and MR41 OP[7:5], SDRAM provides its NT-ODT termination during Deep Sleep Mode to guarantee other ranks stable operation.

LPDDR5 SDRAM can operate in Deep Sleep Mode in both the standard or elevated temperature ranges. SDRAM will also manage Self Refresh power consumption when the operating temperature changes lower at low temperature and higher at high temperature.

Deep Sleep Mode entry and exit are shown in **Figure 144** and the related AC timing parameters are defined in **Table 220**.

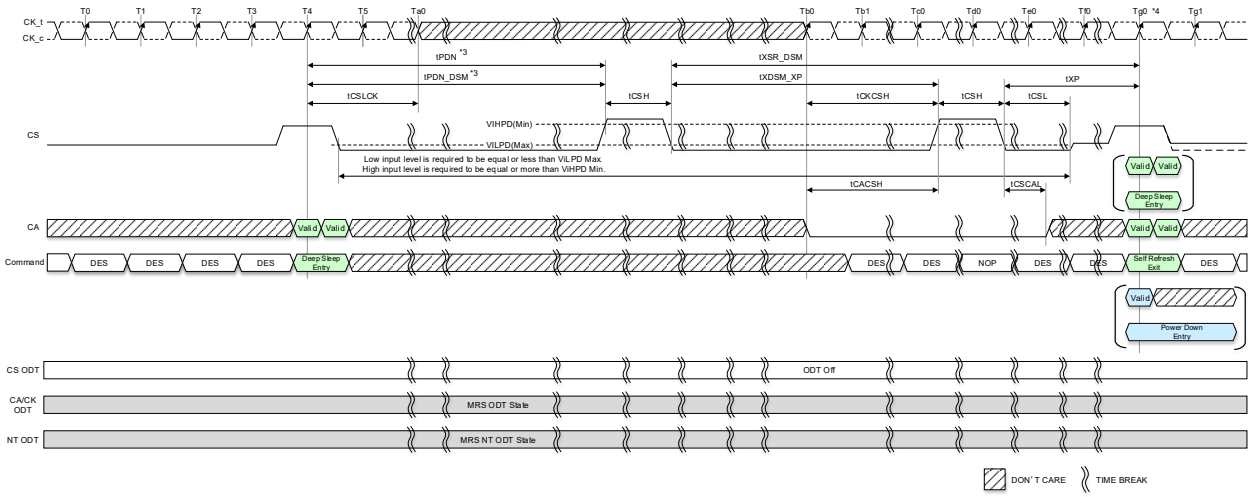

NOTE 1 Input clock frequency can be changed or the input clock can be stopped or floated after tCSLCK satisfied and during power-down, provided that upon exiting power-down, the clock is stable and within specified limits for a minimum of tCKCSH of stable clock prior to power-down exit and the clock frequency is between the minimum and maximum specified frequency for the speed grade in use.

NOTE 2 VIHPD(Min) and VILPD(Max) level of CS is 550mV/130mV.

NOTE 3 tPDN and tPDN_DSM indicate different periods.
- tPDN: Minimum interval between Deep Sleep Mode Entry and Exit
- tPDN_DSM: Minimum Deep Sleep Mode duration time for SDRAM compliance with IDD6DS power specification.

NOTE 4 SDRAM can accept the following commands; PDE, DSM, MRR, CAS, DES, SRX, MPC, RFF, WFF, RDC and MRW except PASR setting after Tg0.

NOTE 5 CA input is required to be Low during tCSH.

Figure 144 - Deep Sleep Mode Entry in IDLE state and Exit Timing: CS ODT Disable

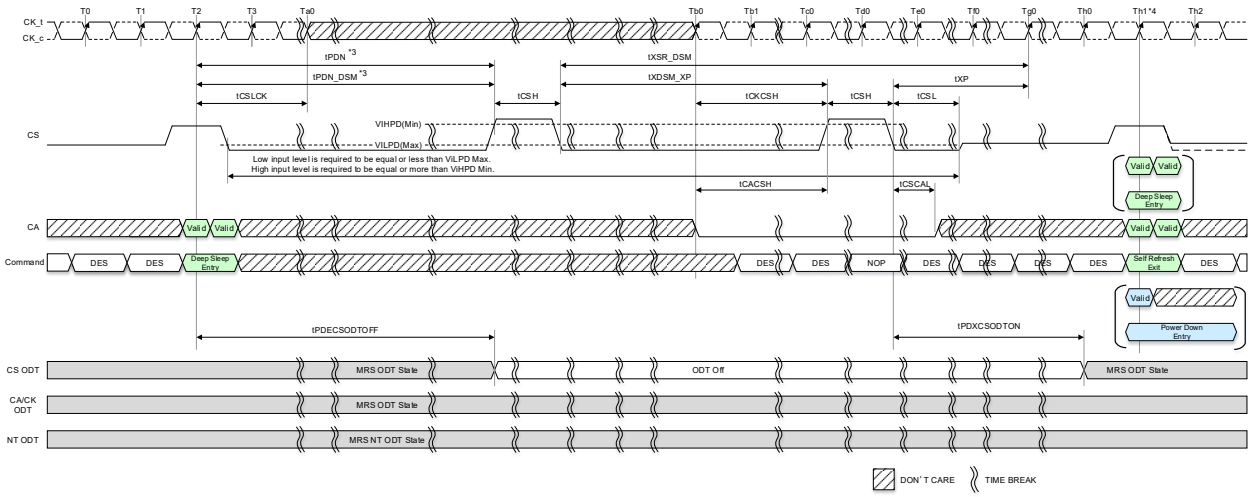

NOTE 1 Input clock frequency can be changed or the input clock can be stopped or floated after tCSLCK satisfied and during power-down, provided that upon exiting power-down, the clock is stable and within specified limits for a minimum of tCKCSH of stable clock prior to power-down exit and the clock frequency is between the minimum and maximum specified frequency for the speed grade in use.

NOTE 2 VIHPD(Min) and VILPD(Max) level of CS is 550mV/130mV.

NOTE 3 tPDN and tPDN_DSM indicate different periods.
- tPDN: Minimum interval between Deep Sleep Mode Entry and Exit
- tPDN_DSM: Minimum Deep Sleep Mode duration time for SDRAM compliance with IDD6DS power specification.

NOTE 4 SDRAM can accept the following commands; PDE, DSM, MRR, CAS, DES, SRX, MPC, RFF, WFF, RDC and MRW except PASR setting after Th1.

NOTE 5 CA input is required to be Low during tCSH.

Figure 145 - Deep Sleep Mode Entry in IDLE state and Exit Timing: CS ODT Enable

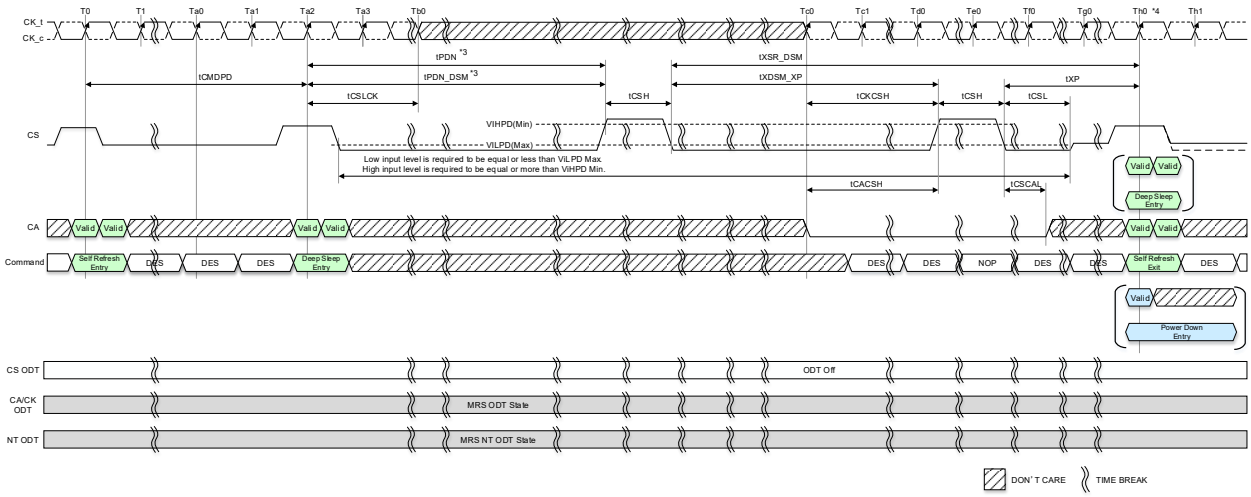

NOTE 1 Input clock frequency can be changed or the input clock can be stopped or floated after tCSLCK satisfied and during power-down, provided that upon exiting power-down, the clock is stable and within specified limits for a minimum of tCKCSH of stable clock prior to power-down exit and the clock frequency is between the minimum and maximum specified frequency for the speed grade in use.

NOTE 2 VIHPD(Min) and VILPD(Max) level of CS is 550mV/130mV.

NOTE 3 tPDN and tPDN_DSM indicate different periods.
- tPDN: Minimum interval between Deep Sleep Mode Entry and Exit
- tPDN_DSM: Minimum Deep Sleep Mode duration time for SDRAM compliance with IDD6DS power specification.

NOTE 4 SDRAM can accept the following commands; PDE, DSM, MRR, CAS, DES, SRX, MPC, RFF, WFF, RDC and MRW except PASR setting after Th0.

NOTE 5 CA input is required to be Low during tCSH.

Figure 146 - Deep Sleep Mode Entry in Self Refresh state and Exit Timing: CS ODT Disable

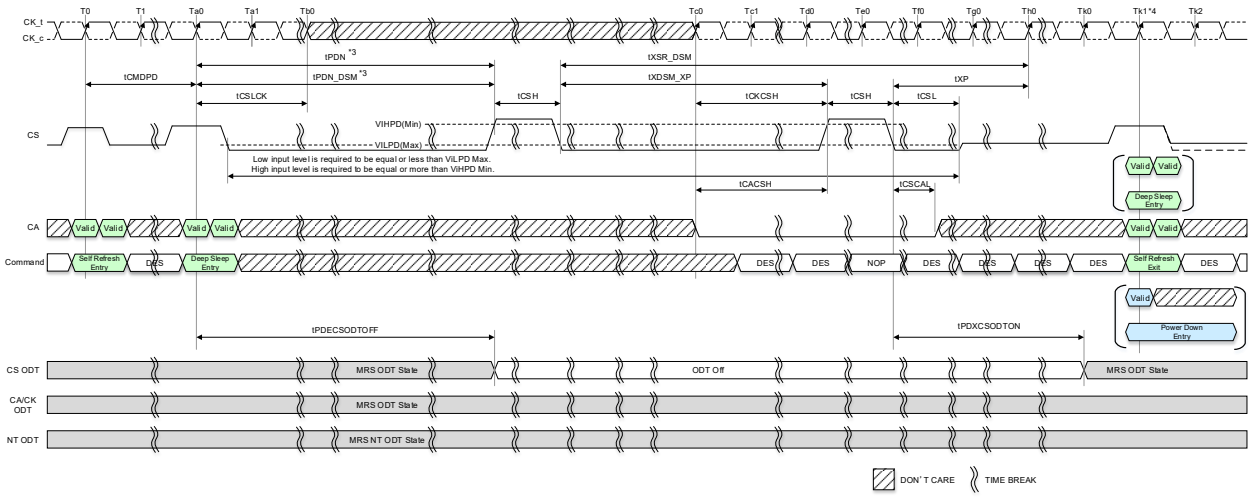

NOTE 1 Input clock frequency can be changed or the input clock can be stopped or floated after tCSLCK satisfied and during power-down, provided that upon exiting power-down, the clock is stable and within specified limits for a minimum of tCKCSH of stable clock prior to power-down exit and the clock frequency is between the minimum and maximum specified frequency for the speed grade in use.

NOTE 2 VIHPD(Min) and VILPD(Max) level of CS is 550mV/130mV.

NOTE 3 tPDN and tPDN_DSM indicate different periods.
- tPDN: Minimum interval between Deep Sleep Mode Entry and Exit
- tPDN_DSM: Minimum Deep Sleep Mode duration time for SDRAM compliance with IDD6DS power specification.

NOTE 4 SDRAM can accept the following commands; PDE, DSM, MRR, CAS, DES, SRX, MPC, RFF, WFF, RDC and MRW except PASR setting after Tk1.

NOTE 5 CA input is required to be Low during tCSH.

Figure 147 - Deep Sleep Mode Entry in Self Refresh state and Exit Timing: CS ODT Enable

Table 220 - Deep Sleep Mode AC Timing Table

Parameter	Symbol	Min/ Max	Data Rate	Unit	Note
Deep Sleep Mode Timing					
Minimum interval between Deep Sleep Mode Entry and Exit	tPDN	Min	10ns + 1tCK	ns	1
Minimum Deep Sleep Mode duration time for SDRAM compliance with IDD6DS power specification	tPDN_DSM	Min.	4	ms	
Delay from Deep Sleep Mode Exit to SRX	tXSR_DSM	Min.	200	us	
Delay from Deep Sleep Mode Exit to Power-Down Exit	tXDSM_XP	Min.	190	us	
Delay from PD/DSM entry to CS ODT OFF	tPDECSODTOFF	Max	10ns + 1tCK	ns	1
Delay from Power Down Exit to CS ODT ON	tPDXCSODTON	Max	20	ns	

NOTE 1 1tCK for this timing is the tCK value of the operating frequency when the DSM Entry command is issued.

7.6 Other Operation

7.6.1 Mode Register Read

The Mode Register Read (MRR) command is used to read configuration and status data from the LPDDR5-SDRAM registers. The MRR command is initiated with CS and CA[6:0] in the proper state as defined by the Command Truth Table, **Table 178**. The mode register address operands (MA[6:0]) allow the user to select one of 128 registers. The mode register contents are available on the first 8 UI's data bits of DQ[7:0] after RL + tWCK2DQO following the MRR command. Subsequent data bits contain valid but undefined content. WCK is toggled for the duration of the Mode Register READ burst. MRR has a command burst length 16 regardless of bank group, 16bank or 8bank mode.

In byte mode, the lower byte device follows the DQ output mapping in Table 221 because only DQ[7:0] is used to show the output from mode register. The upper byte device follows the DQ output mapping in Table 222 (MRR data).

MRR operation must not be interrupted.

Table 221 — DQ Output Mapping for lower byte

UI	0	1	2	3	4	5	6	7	8	9	10	11	12	13	14	15
DQ0	OP0								V							
DQ1	OP1								V							
DQ2	OP2								V							
DQ3	OP3								V							
DQ4	OP4								V							
DQ5	OP5								V							
DQ6	OP6								V							
DQ7	OP7								V							
DQ[15:8]	V															
DMI[1:0]	V															

NOTE 1 MRR data is extended to first 8 UI's for DRAM controller to sample data easily.
NOTE 2 The read preamble and post amble of MRR are the same as normal read operation.

7.6.1 Mode Register Read (Cont'd)

Table 222 — DQ Output Mapping for upper byte

UI	0	1	2	3	4	5	6	7	8	9	10	11	12	13	14	15
DQ[7:0]	V															
DQ8	OP0								V							
DQ9	OP1								V							
DQ10	OP2								V							
DQ11	OP3								V							
DQ12	OP4								V							
DQ13	OP5								V							
DQ14	OP6								V							
DQ15	OP7								V							
DMI[1:0]	V															

NOTE 1 MRR data is extended to first 8 UI's for DRAM controller to sample data easily.
NOTE 2 The read preamble and post amble of MRR are the same as normal read operation.

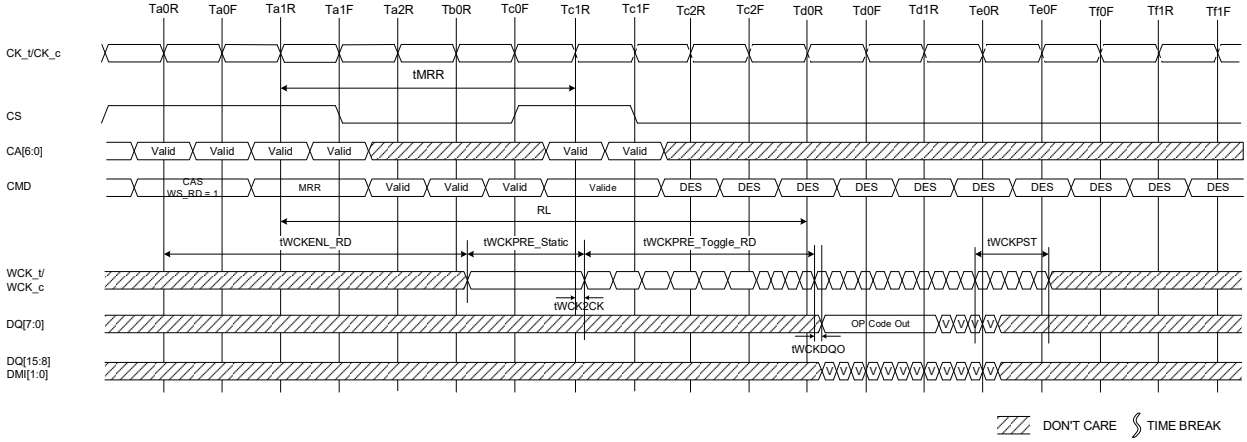

NOTE 1 Only BL=16 is supported.
NOTE 2 Only DES is allowed during tMRR period.
NOTE 3 There are some exception about issuing commands after tMRR. Refer to MRR/MRW Timing Constraints Table for details.
NOTE 4 DBI is disable mode.
NOTE 5 DES commands except tMRR period are shown for ease of illustration; other commands may be valid at these times.
NOTE 6 DQ: VSS termination, WCK: VSS Termination.

Figure 148 — Mode Register Read Operation

7.6.1.1 MRR after Read and Write Command

After a prior Read Command, the MRR command must not be issued earlier than RL+ BL/n_max + RD(tWCKPST/tCK) +2nCK clock cycles, in a similar way WL + BL/n_max + RU(tWTR/tCK) clock cycles after a prior Write, Write with AP, Masked Write, Masked Write with AP and Write FIFO command in order to avoid the collision of Read and Write burst data on SDRAM's internal Data bus. The timing variable "BL/n_max" is defined in the effective burst length table.

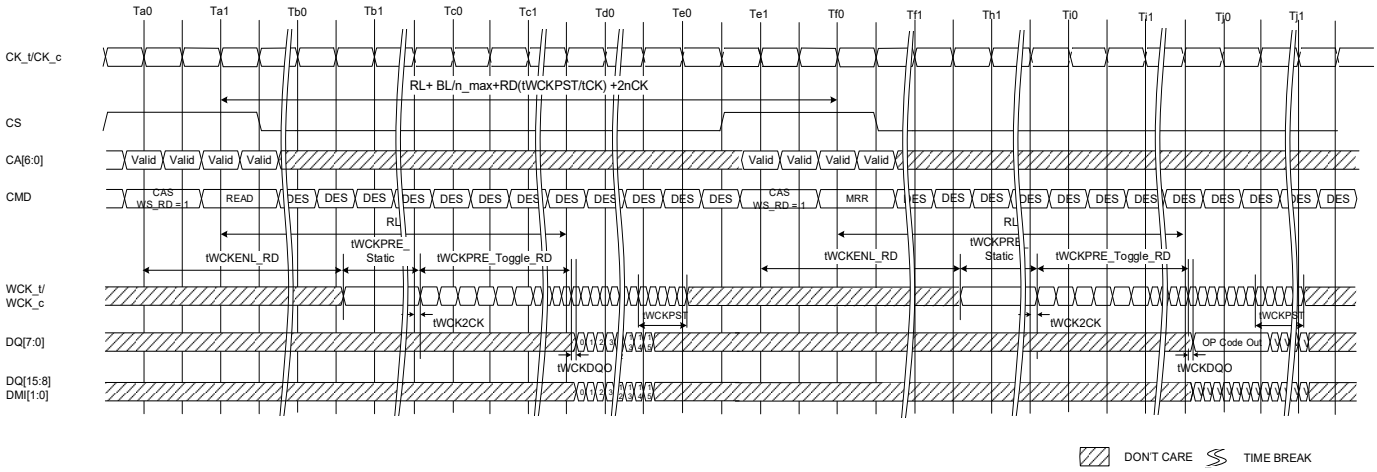

NOTE 1 The minimum number of clock cycles from the burst READ command to the MRR command is RL+ BL/n_max +RD(tWCKPST/tCK) +2nCK. The timing variable "BL/n_max" is defined in the effective burst length table.
NOTE 2 Read BL = 16, MRR BL =16, DQ : VSSQ termination, WCK : VSS Termination.
NOTE 3 DES commands except tMRR period are shown for ease of illustration; other commands may be valid at these times.

Figure 149 — READ to MRR Timing

7.6.1.1 MRR after Read and Write Command (Cont'd)

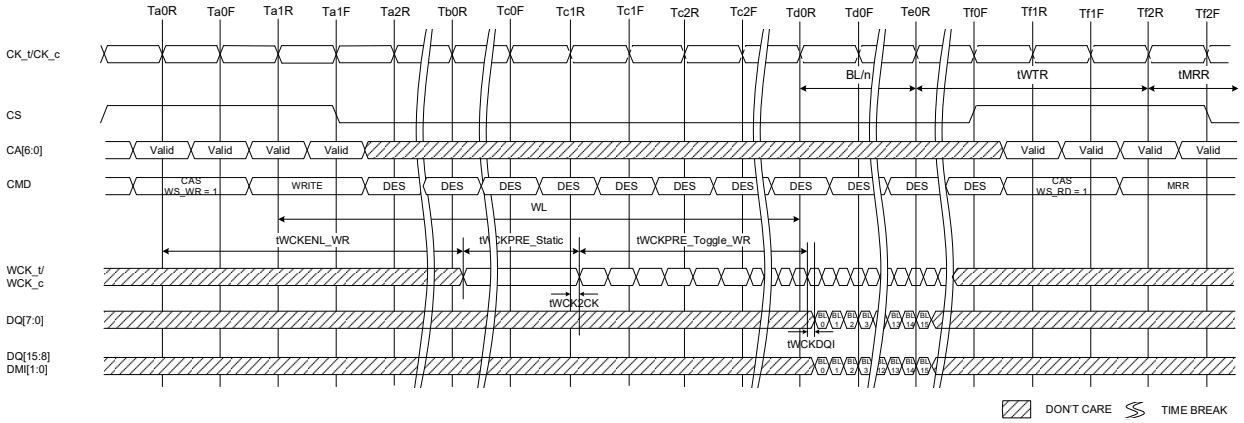

NOTE 1 The minimum number of clock cycles from the burst write command to the MRR command is WL+BL/n_max+RU(tWTR/tCK). The timing variable "BL/n_max" is defined in the effective burst length table.
NOTE 2 Write BL = 16, MRR BL =16, DQ: VSS termination, WCK: VSS Termination.
NOTE 3 Only DES is allowed during tMRR period.
NOTE 4 DES commands except tMRR period are shown for ease of illustration; other commands may be valid at these times.
NOTE 5 tWTR starts at the rising edge of CK after the last latching edge of WCK.

Figure 150 — WRITE to MRR Timing

7.6.1.2 MRR after Power-Down Exit

Following the power-down state, an additional time, tMRRI, is required prior to issuing the mode register read (MRR) command. This additional time (equivalent to tRCD) is required in order to be able to maximize power-down current savings by allowing more power-up time for the MRR data path after exit from power-down mode.

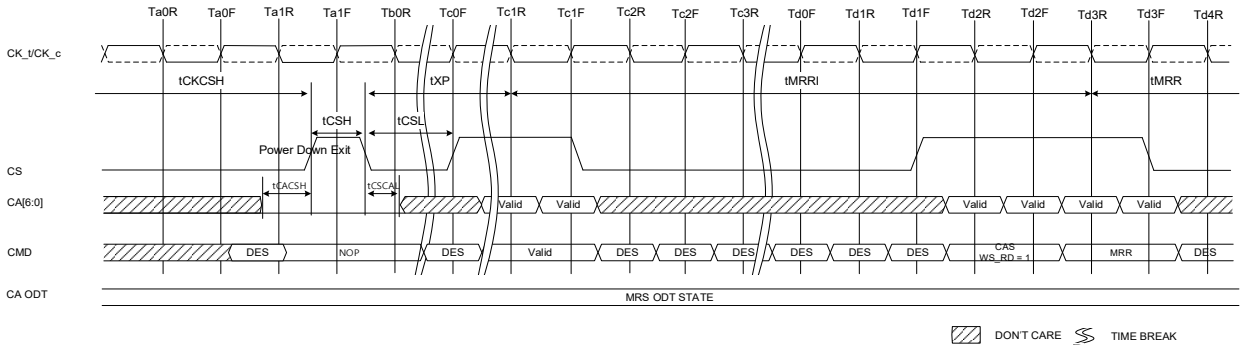

NOTE 1 Only DES is allowed during tMRR period.
NOTE 2 DES commands except tMRR period are shown for ease of illustration; other commands may be valid at these times.

Figure 151 — MRR Following Power-Down

Table 223 — Mode Register Read/Write AC Timing

Parameter	Symbol	Min/Max	Data Rate	Unit	Note
Mode Register Read/Write Timing					
Additional time after tXP has expired until MRR command may be issued	tMRRI	Min.	tRCD + 2nCK	ns	
MODE REGISTER READ command period	tMRR	Min.	4 @ CK:WCK=1:4 8 @ CK:WCK=1:2	nCK	
MODE REGISTER WRITE command period	tMRW	Min.	Max (10ns, 5nCK)	ns	
Mode register set command delay	tMRD	Min.	Max (14ns, 5nCK)	ns	

7.6.2 Mode Register Write

The Mode Register Write (MRW) command is used to write configuration data to the mode registers. The MRW command is initiated by setting CS and CA[6:0] to valid levels as defined by Command Truth Table, **Table 178**. The mode register address and the data written to the mode registers is contained in CA[6:0]. The Mode Register Write command is composed of two commands, MRW-1 command and MRW-2 command. But, MRW-1 command must be followed by MRW-2 command consecutively. The MRW command period is defined by tMRW. The Mode Register Write command to read-only registers have no impact on the functionality of the device.

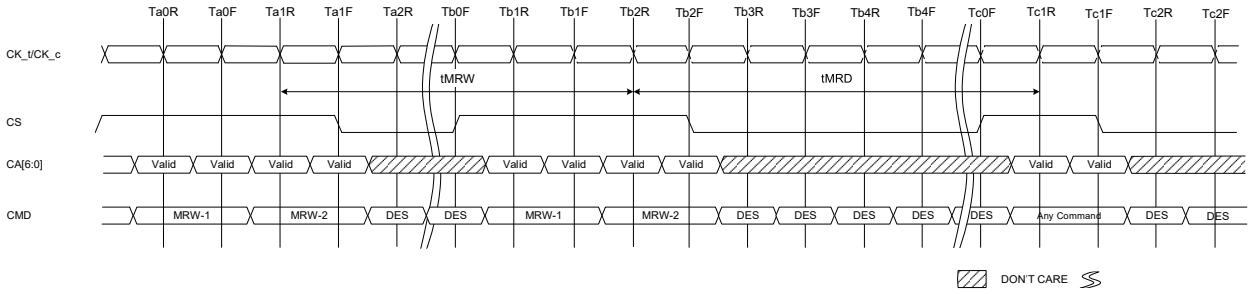

NOTE 1 Only DES command is allowed during tMRW and tMRD periods.

Figure 152 — Mode Register Write Timing

Table 224 — Truth Table for Mode Register Read (MRR) and Mode Register Write (MRW)

Current State	Command	Intermediate State	Next State
SDRAM		SDRAM	SDRAM
All Banks Idle	MRR	Mode Register Reading (All Banks Idle)	All Banks Idle
	MRW	Mode Register Writing (All Banks Idle)	All Banks Idle
Bank(s) Active	MRR	Mode Register Reading	Bank(s) Active
	MRW	Mode Register Writing	Bank(s) Active

7.6.2.1 Mode Register Write Disable control for Byte Mode device

Byte mode device may share their CK_c/CK_t, CS and CA's between upper byte and lower byte od device. Setting MR20 OP[5:4] will allow disabling upper and lower bytes independently for an MRW to the following mode registers. MR20 OP[5:4] (MRW Byte Mode Disable) control specific mode register write operation.

MRW Byte Mode Disable control following mode register OP code.

- MR13 OP[1:0] Thermal Offset
- MR25 OP[5:4] CA BUS TERM, CK BUS TERM
- MR41 OP[4] PPRE
- MR41 OP[7:5] NT DO ODT

7.6.3 Frequency Set Point

Frequency Set Points (FSP) allow the LPDDR5 SDRAM CA Bus to be switched between three differing operating frequencies, with changes in voltage swings and termination values, without ever being in an untrained state which could result in a loss of communication to the SDRAM. This is accomplished by duplicating all CA Bus mode register parameters, as well as other mode register parameters commonly changed with operating frequency. These tripled registers form three sets that use the same mode register addresses, with read/write access controlled by MR bit FSP-WR (Frequency Set-Point Write/Read) and the DRAM operating point controlled by another MR bit FSP-OP (Frequency Set-Point Operation). Changing the FSP-WR bit allows MR parameters to be changed for a selected Frequency Set-Point without affecting the LPDDR5-SDRAM's current operation. Once all necessary parameters have been written to the selected Set-Point, changing the FSP-OP bit will switch operation to use all of the new parameters simultaneously (within tFC), eliminating the possibility of a loss of communication that could be caused by a partial configuration change.

Parameters which have three physical registers controlled by FSP-WR and FSP-OP include:

Table 225 - Mode Register Function with three physical registers

MR#	Operand	Function	Note
MR1	OP[3]	CK mode	
	OP[7:4]	WL (Write Latency)	
MR2	OP[3:0]	RL (Read latency) and nRBTP(READ burst end to PRECHARGE delay)	
	OP[7:4]	nWR(Write-Recovery for Auto-Precharge commands)	
MR3	OP[2:0]	PDDS (Pull-Down Drive Strength)	
	OP[4:3]	BK/BG ORG (Bank/Bank Group Organization)	
	OP[5]	WLS (Write Latency Set)	
	OP[6]	DBI-RD (DBI-Read select)	
	OP[7]	DBI-WR (DBI-Write select)	
MR10	OP[0]	RDQS Post-amble mode	
	OP[3:2]	WCK PST (WCK Post-amble Length)	
	OP[5:4]	RDQS PRE (RD Pre-amble Length)	
	OP[7:6]	RDQS PST (RD Post-amble Length)	
MR11	OP[2:0]	DQ ODT (DQ Bus Receiver On-Die-Termination)	
	OP[3]	NT-ODT Enable (Non Target ODT Enable)	
	OP[6:4]	CA ODT (CA Bus Receiver On-Die-Termination)	
MR12	OP[6:0]	V_{REF}(CA) (V_{REF}(CA) Setting)	
MR14	OP[6:0]	V_{REF}(DQ[7:0]) (V_{REF}(DQ[7:0]) Setting)	
MR15	OP[6:0]	V_{REF}(DQ[15:8]) (V_{REF}(DQ[15:8]) Setting)	
MR17	OP[2:0]	SoC ODT (Controller ODT Value for VOH calibration)	
	OP[3]	ODTD-CK (CK ODT termination)	
	OP[4]	ODTD-CS (CS ODT termination)	
	OP[5]	ODTD-CA (CA ODT termination)	
MR18	OP[2:0]	WCK ODT	
	OP[3]	WCK FM (WCK Frequency Mode)	
	OP[4]	WCK ON (WCK always ON mode)	
	OP[7]	CKR (WCK to CK frequency ratio)	
MR19	OP[1:0]	DVFSC (VDD2 Dynamic Voltage and Frequency Scaling Core)	
	OP[4]	WCK2DQ OSC FM	
	OP[3:2]	DVFSQ (VDDQ Dynamic Voltage and Frequency Scaling VDDQ)	
MR20	OP[1:0]	RDQS (Read DQS)	
	OP[3:2]	WCK mode	
MR22	OP[5:4]	WECC (Write link ECC Control)	
	OP[7:6]	RECC (Read link ECC Control)	
MR24	OP[2:0]	DFE Quantity for Lower Byte (DFEQL)	
	OP[6:4]	DFE Quantity for Upper Byte (DFEQU)	
MR30	OP[3:0]	DCA for Lower Byte (DCAL)	
	OP[7:4]	DCA for Upper Byte (DCAU)	
MR41	OP[7:5]	NT DQ ODT (Non-Target DQ Bus Receiver On-Die-Termination)	

See 6.2.1, Mode Register Definition, for more details.

7.6.3 Frequency Set Point (Cont'd)

Table 226 shows how the three mode registers for each of the parameters above can be modified by setting the appropriate FSP-WR value, and how device operation can be switched between operating points by setting the appropriate FSP-OP value. The FSP-WR and FSP-OP functions operate completely independently.

Table 226 — Relation between MR Setting and DRAM Operation

Function	MR# & Operand	Data	Operation	Note
FSP-WR	MR16 OP[1:0]	00_B (Default)	Data write to Mode Register N for FSP-OP[0] by MRW Command. Data read from Mode Register N for FSP-OP[0] by MRR Command.	1
		01_B	Data write to Mode Register N for FSP-OP[1] by MRW Command. Data read from Mode Register N for FSP-OP[1] by MRR Command.	
		10_B	Data write to Mode Register N for FSP-OP[2] by MRW Command. Data read from Mode Register N for FSP-OP[2] by MRR Command.	
FSP-OP	MR16 OP[3:2]	00_B (Default)	SDRAM operates with Mode Register N for FSP-OP[0] setting.	2
		01_B	SDRAM operates with Mode Register N for FSP-OP[1] setting.	
		10_B	SDRAM operates with Mode Register N for FSP-OP[2] setting.	

NOTE 1 FSP-WR stands for Frequency Set Point Write/Read.
NOTE 2 FSP-OP stands for Frequency Set Point Operating Point.

7.6.3.1 Frequency set point update Timing

The Frequency set point update timing is shown in Figure 153. When changing the frequency set point via MR16 OP[3:2], the VRCG setting: MR16 OP[6] is required to be changed into VREF Fast Response (high current) mode at the same time. After Frequency change time(tFC) is satisfied. VRCG can be changed into Normal Operation mode via MR16 OP[6].

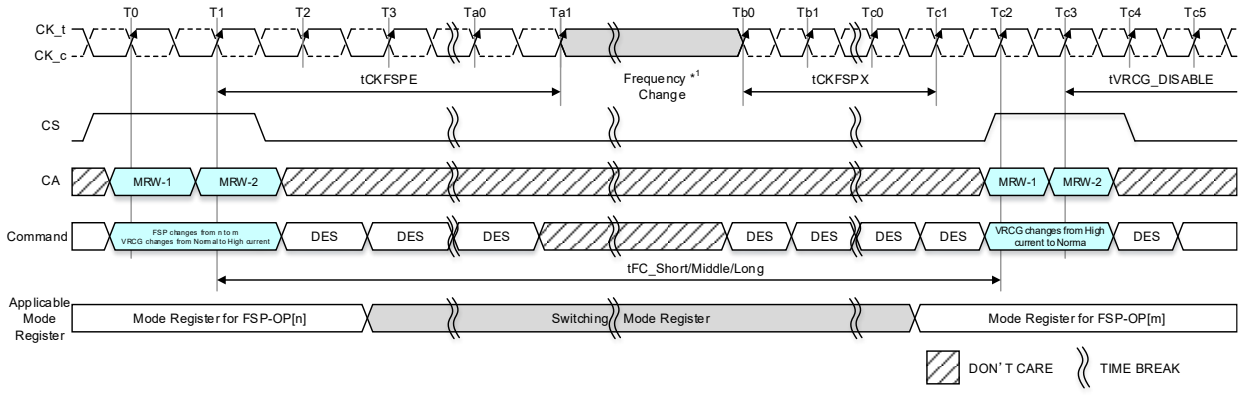

NOTE 1 The Clock frequency change should be made during the 'frequency change' timing (Ta1 to Tb0). For more information, refer to 7.6.7, Input Clock Stop and Frequency Change.

Figure 153 — Frequency Set Point Switching Timing

7.6.3.2 Frequency set point update Timing for DVFSC and DVFSQ

TBD

Table 227 — Frequency Set Point AC Timing Table

Item	Symbol	Min/ Max	CK Frequency (MHz)												Unit	Notes
			533	1067	1600	2133	2750	3200	3733	4267	4800	5500	6000	6400		
Frequency Set Point parameters																
Frequency Set Point Switching Time	tFC_Short	Min	200+0.5tCK												ns	1,2
	tFC_Middle	Min	200+0.5tCK												ns	1,2
	tFC_Long	Min	250+0.5tCK												ns	1,2
Valid Clock Requirement after Entering FSP Change	tCKFSPE	Min	max(7.5ns, 4nCK)												-	
Valid Clock Requirement before 1st Valid Command after FSP change	tCKFSPX	Min	max(7.5ns, 4nCK)												-	

NOTE 1 Frequency Set Point Switching Time depends on value of V_{REF}(CA) setting: MR12 OP[6:0] of FSP-OP 0, 1 and 2. The details are shown in Table 228. Additionally change of Frequency Set Point may affect V_{REF}(DQ) setting. Settling time of V_{REF}(DQ) level is same as V_{REF}(CA) level.

NOTE 2 tCK for this timing is the tCK value of the operating frequency when the MRW is issued.

Table 228 — tFC value mapping

Application	Step Size	
	From FSP -OP0	To FSP-OP1
tFC_Short	Base	A single step size increment/decrement
tFC_Middle	Base	Two and less than 33 step size increment/decrement
tFC_Long	Base	More than 32 step size increment/decrement

NOTE 1 Changing from FSP-OPx to FSP-OPy is also supported.

Table 229 provides an example of tFC value mapping when FSP-OP moves from OP0 to OP1.

Table 229 — tFC value mapping example

Case	From/To	FSP-OP: MR16 OP[3:2]	V_{REF}(CA) Setting: MR12: OP[6:0]	Application	Note
1	From	00	0001100	tFC_Short	1
	To	01	0001101		
2	From	00	0001100	tFC_Middle	2
	To	01	0011110		
3	From	00	0001000	tFC_Long	3
	To	01	0101000		

NOTE 1 A single step size increment/decrement for V_{REF}(CA) Setting Value.

NOTE 2 Two and less than 33 step size increment/decrement for V_{REF}(CA) Setting Value.

NOTE 3 More than 32 step size increment/decrement for V_{REF}(CA) Setting Value.

7.6.3.2 Frequency set point update Timing for DVFSC and DVFSQ (Cont'd)

The LPDDR5-SDRAM defaults to FSP-OP[0] at power-up. Both Set-Points default settings needed to operate in un-terminated, low-frequency environments. To enable the LPDDR5 SDRAM to operate at higher frequencies, Command Bus Training mode should be utilized to train the alternate Frequency Set-Point, **Figure 154**. See the section Command Bus Training (4.2.2) for more details on this training mode.

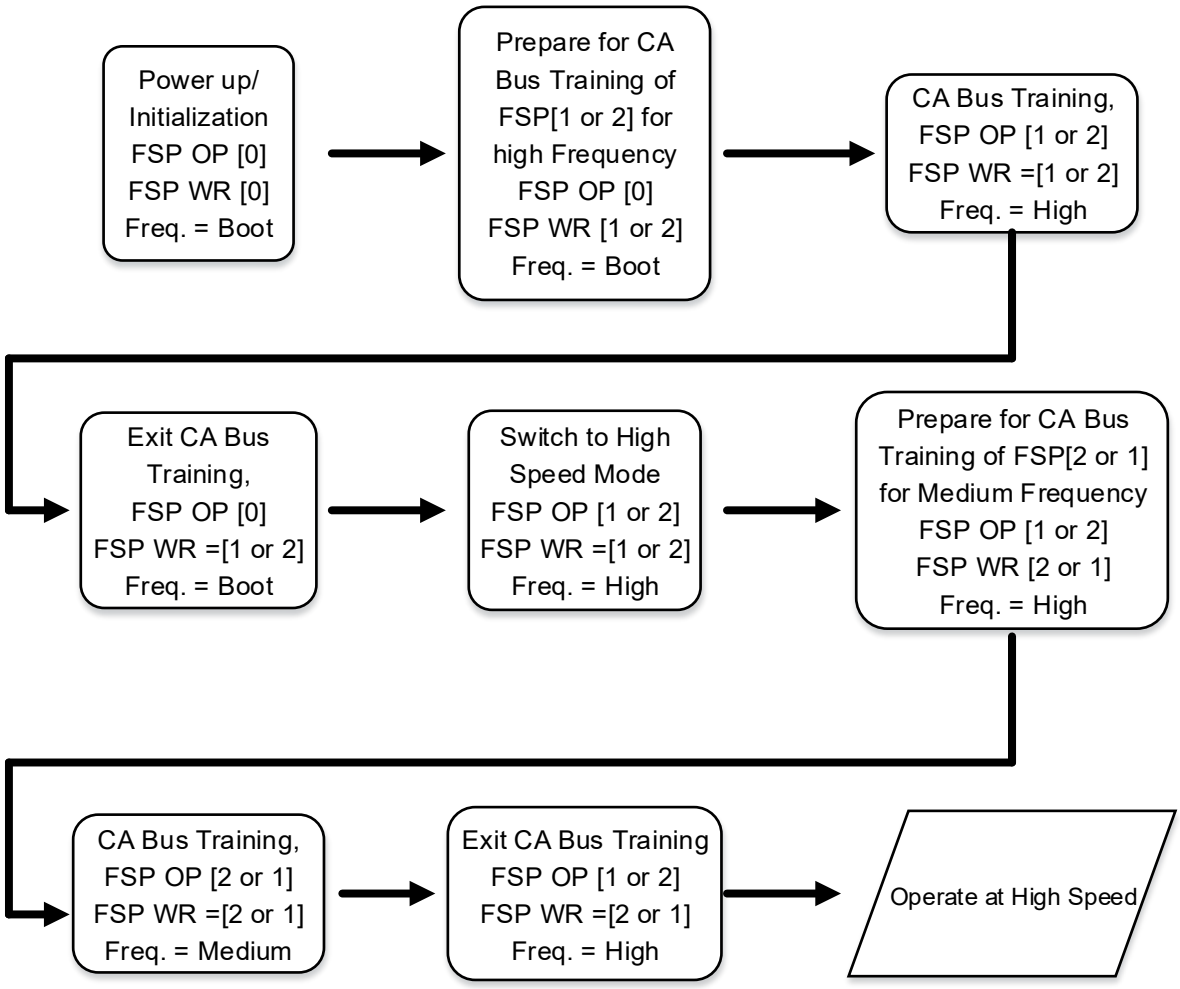

Figure 154 — Training Three Frequency Set-Points

7.6.3.2 Frequency set point update Timing for DVFSC and DVFSQ (Cont'd)

Once all Frequency Set-Points have been trained, switching between points can be performed by a single MRW followed by waiting for tFC (Figure 155).

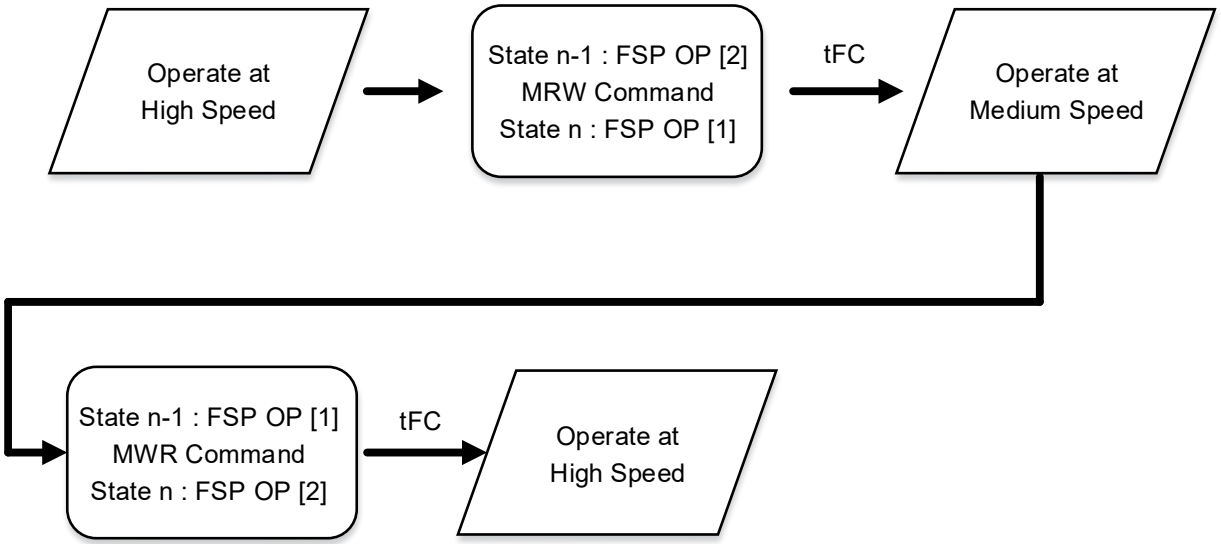

Figure 155 — Switching Between Two Trained Frequency Set-Points (Example)

Switching to a third (or more) Set-Point can be accomplished if the memory controller has stored the previously-trained values (in particular the V_{REF}(CA) calibration value) and re-writes these to the alternate Set-Point before switching FSP-OP (Figure 156).

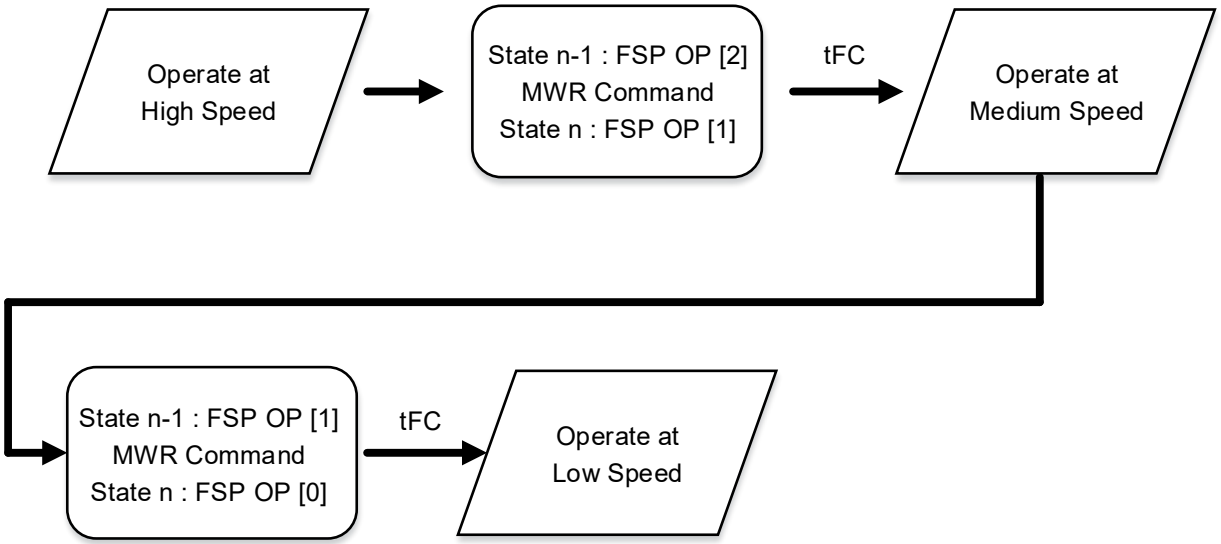

Figure 156 — Switching to a Third Trained Frequency Set-Point (Example)

7.6.4 On-Die Termination (ODT)

7.6.4.1 On-Die Termination for Command/Address Bus

Command/Address ODT (On-Die Termination) is a feature of the LPDDR5 SDRAM that allows the SDRAM to turn on/off termination resistance for CK_t, CK_c, and CA[6:0] signals. The ODT feature is designed to improve signal integrity of the memory channel by allowing the DRAM controller to turn on and off termination resistance for any target DRAM devices via Mode Register setting. A simple functional representation of the Command/Address ODT feature is shown in Figure 157.

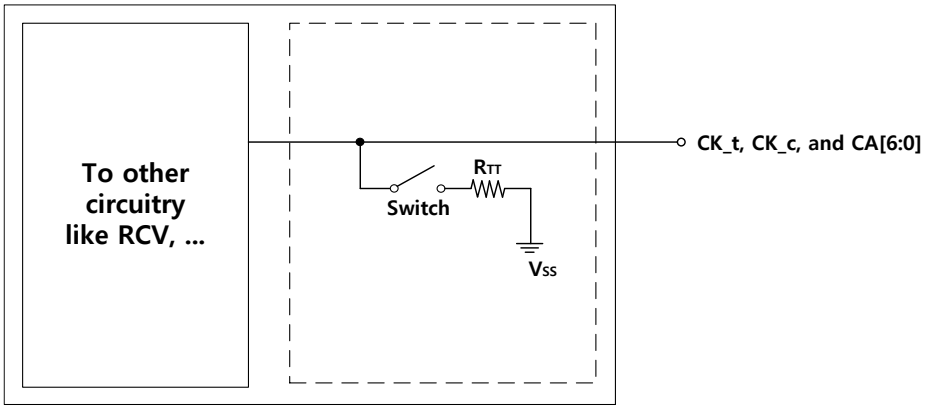

Figure 157 — Functional Representation of Command/Address bus ODT

7.6.4.1.1 ODT Mode Register and ODT State Table for Command/Address Bus

Command/Address ODT termination values are set and enabled via MR11. The CA bus (CK_t, CK_c, CA[6:0]) ODT resistance values are set by MR11 OP[6:4]. The default state for the CA bus is ODT disabled.

CA/CK ODT of the device is designed to enable one rank (termination for one rank and un-termination for other ranks) or multi ranks (balanced termination for all ranks) to terminate the entire command bus in the multi rank system. For this reason, the rank providing CA, CK ODT via MR11 OP[6:4] and also MR17 setting will continue to terminate CA, CK bus in all DRAM states including Power-Down and Deep Sleep Mode.

For the individual ODT control, LPDDR5 SDRAM uses the MR17 setting. MR17 OP[3] is set to disable the CK ODT and MR17 OP[5] is set to disable the CA ODT. MR17 OP[7:6] is set to disable CK/CA ODT of the lower or upper byte of selected device and is only used for the Byte Mode device (X8).

In the multi-rank/channel system, the device usually shares the CA/CK bus and the un-terminated die needs to know ODT status of other shared dies when the termination status of CA/CK bus is different from each other. LPDDR5 SDRAM uses the MR25 setting to decide a buffer type for power optimization. MR25 OP[4] is set to notify CK ODT status of other shared dies, MR25 OP[5] is set to notify CA ODT status of other shared dies.

Example: when CK and CA ODT status is different from each other(ex. CK termination, CA un-termination) and MR25 OP[5] is disabled, the un-terminated CA input buffer use the fixed level reference voltage (TBD).

7.6.4.1.1 ODT Mode Register and ODT State Table for Command/Address Bus (Cont'd)

The ODT state of the Command/Address bus is shown in Table 230.

Table 230 — Command/Address Bus ODT State

LPDDR5 X16 Mode Device (MR8 OP[7:6] = 00B case)

MR17	X8ODTD Upper	X8ODTD Lower	CA	CK	CA	CK_t/CK_c
	OP[7]	OP[6]	OP[5]	OP[3]		
LPDDR5	X	X	0	0	T	T
	X	X	0	1	T	
	X	X	1	0		T
	X	X	1	1		

NOTE 1 X16 mode device ignores MR17 OP[7:6] setting.
NOTE 2 MR11 OP[6:4] must be 001_B, 010_B, 011_B, 100_B, 101_B, or 110_B to turn on CA/CK ODT.
NOTE 3 T means "terminated" condition. Blank is "un-terminated".

LPDDR5 Byte Mode Device (MR8 OP[7:6] = 01B case)

MR17	X8ODTD Upper	X8ODTD Lower	CA	CK	CA		CK_t/CK_c	
	OP[7]	OP[6]	OP[5]	OP[3]	0Byte	1Byte	0Byte	1Byte
LPDDR5	0	0	0	0	T	T	T	T
	0	0	0	1	T	T		
	0	0	1	0			T	T
	0	0	1	1				
	0	1	0	0		T		T
	0	1	0	1		T		
	0	1	1	0				T
	0	1	1	1				
	1	0	0	0	T		T	
	1	0	0	1	T			
	1	0	1	0			T	
	1	0	1	1				

NOTE 1 MR11 OP[6:4] must be 001_B, 010_B, 011_B, 100_B, 101_B, or 110_B to turn on CA/CK ODT.
NOTE 2 T means "terminated" condition. Blank is "un-terminated".
NOTE 3 Two T(T for 0_B and 1_B) means balanced (identical) CA/CK ODT setting in x8 system.

7.6.4.1.2 ODT Mode Register and ODT Characteristics for Command/Address Bus

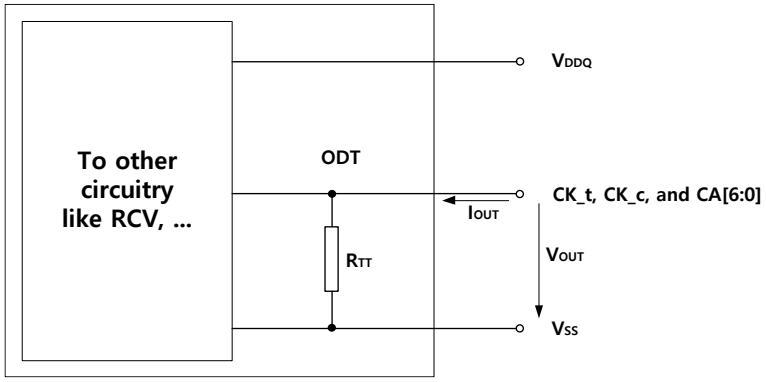

Figure 158 — On Die Termination for Command/Address Bus

Table 231 — ODT DC Electrical Characteristics, assuming RZQ = 240Ω±1% over the entire operating temperature range after a proper ZQ calibration

MR11 OP[6:4]	RTT	Vout	Min	Nom	Max	Unit	Note
001	240Ω	VOLdc = 0.2*VDDQ	0.8	1.0	1.1	RZQ	1,2,3
		VOMdc = 0.5*VDDQ	0.9	1.0	1.1	RZQ	1,2,3
		VOHdc = 0.75*VDDQ	0.9	1.0	1.3	RZQ	1,2,3
010	120Ω	VOLdc = 0.2*VDDQ	0.8	1.0	1.1	RZQ/2	1,2,3
		VOMdc = 0.5*VDDQ	0.9	1.0	1.1	RZQ/2	1,2,3
		VOHdc = 0.75*VDDQ	0.9	1.0	1.3	RZQ/2	1,2,3
011	80Ω	VOLdc = 0.2*VDDQ	0.8	1.0	1.1	RZQ/3	1,2,3
		VOMdc = 0.5*VDDQ	0.9	1.0	1.1	RZQ/3	1,2,3
		VOHdc = 0.75*VDDQ	0.9	1.0	1.3	RZQ/3	1,2,3
100	60Ω	VOLdc = 0.2*VDDQ	0.8	1.0	1.1	RZQ/4	1,2,3
		VOMdc = 0.5*VDDQ	0.9	1.0	1.1	RZQ/4	1,2,3
		VOHdc = 0.75*VDDQ	0.9	1.0	1.3	RZQ/4	1,2,3
101	48Ω	VOLdc = 0.2*VDDQ	0.8	1.0	1.1	RZQ/5	1,2,3
		VOMdc = 0.5*VDDQ	0.9	1.0	1.1	RZQ/5	1,2,3
		VOHdc = 0.75*VDDQ	0.9	1.0	1.3	RZQ/5	1,2,3
110	40Ω	VOLdc = 0.2*VDDQ	0.8	1.0	1.1	RZQ/6	1,2,3
		VOMdc = 0.5*VDDQ	0.9	1.0	1.1	RZQ/6	1,2,3
		VOHdc = 0.75*VDDQ	0.9	1.0	1.3	RZQ/6	1,2,3
Mismatch CA-CA within CLK group		0.5*VDDQ	-		2	%	1,2,4

NOTE 1 The tolerance limits are specified after calibration with stable voltage and temperature. For the behavior of the tolerance limits if temperature or voltage changes after calibration, see TBD.

NOTE 2 Pull-Dn ODT resistors are recommended to be calibrated at 0.5*VDDQ. Other calibration schemes may be used to achieve the linearity spec shown, e.g., calibration at 0.2* VDDQ and 0.75*VDDQ.

NOTE 3 Measurement definition for RTT : TBD.

NOTE 4 CA to CA mismatch within clock group (CA) variation for a given component including CK_t and CK_c (characterized).

$$\mathbf{CA-CA(Mismatch)} = \frac{\boldsymbol{RTT(max)} - \boldsymbol{RTT(min)}}{\boldsymbol{RTT(avg)}}$$

7.6.4.1.3 ODT update time for Command/Address Bus

ODT update time for Command/Address Bus after Mode Register set are shown in Figure **159**.

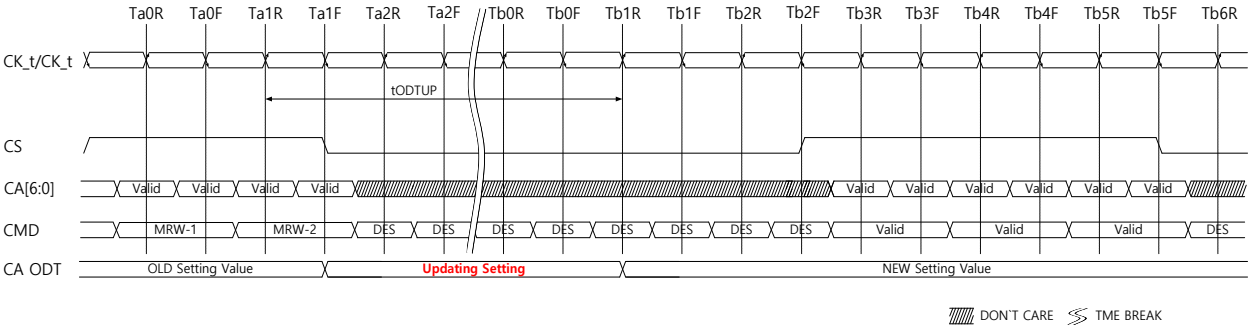

Figure 159 — ODT for Command/Address setting update timing

Table 232 — ODT Command/Address bus AC timing parameter

Speed		ALL Operation Frequency		Unit
Parameter	Symbol	MIN	MAX	
ODT C/A Value Update Time	tODTUP	-	250	ns

7.6.4.2 On-Die Termination for Data Bus

Data Bus ODT(On-Die Termination) is a feature of the LPDDR5 SDRAM that allows the DRAM to turn on/off termination resistance for each DQ, DMI, RDQS_t/c signals. The ODT feature is designed to improve signal integrity of the memory channel by allowing the DRAM controller to turn on and off termination resistance for any target DRAM devices during Write or Mask Write operation.

The Data Bus ODT feature is off and cannot be supported in Power-Down and Self-Refresh and Deep Sleep Mode states. A simple functional representation of the DRAM ODT feature is shown in **Figure 160**.

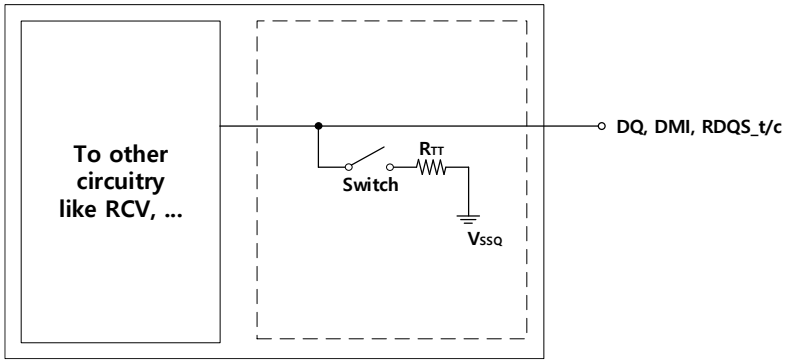

Figure 160 — Functional Representation of Data bus ODT

7.6.4.2.1 ODT Mode Register for Data Bus

The Data Bus ODT mode is enabled if MR11 OP[2:0] are non-zero. In this case, the value of RTT is determined by the settings of those bits. The ODT Mode is disabled if MR11 OP[2:0] = 0.

7.6.4.2.2 Asynchronous ODT for Data Bus

Although ODT Mode is enabled in MR11 OP[2:0], DRAM ODT is basically Hi-Z. DRAM ODT state is automatically turned ON asynchronously based on the Write or Mask Write command that DRAM samples. After the write burst is complete, DRAM ODT state is automatically turned OFF asynchronously.

Following timing parameters apply when DRAM ODT mode is enabled.

- ODTLon, tODTon,min, tODTon,max
- ODTLoff, tODToff,min, tODToff,max

ODTLon is a synchronous parameter and it is the latency from the Write or Mask Write command (the rising edge of the clock) to tODTon reference. ODTLon latency is a fixed latency value for each operation frequency range. Each operation frequency range has a different ODTLon latency. Minimum RTT turn-on time (tODTon,min) is the point in time when the device termination circuit leaves high impedance state and ODT resistance begins to turn on. Maximum RTT turn-on time (tODTon,max) is the point in time when the ODT resistance is fully on. tODTon,min and tODTon,max are measured once ODTLon latency is satisfied from the Write or Mask Write (the rising edge of the clock).

7.6.4.2.2 Asynchronous ODT for Data Bus (Cont'd)

ODTLoff is a synchronous parameter and it is the latency from the Write or Mask Write command (the rising edge of the clock) to tODToff reference. ODTLoff latency is a fixed latency value for each operation frequency range. Each operation frequency range has a different ODTLoff latency. Minimum RTT turn-off time (tODToff,min) is the point in time when the device termination circuit starts to turn off the ODT resistance. Maximum ODT turn-off time (tODToff,max) is the point in time when the on-die termination has reached high impedance. tODToff,min and tODToff,max are measured once ODTLoff latency is satisfied from the Write or Mask Write command (the rising edge of the clock).

Table 233 — ODTLon and ODTLoff Latency Values

Data Rate (Mbps)	WCK:CK Ratio	Lower Clock Frequency Limit (>) (MHz)	Upper Clock Frequency Limit (<=) (MHz)	ODTLon Units=nCK	ODTLoff (WL + BL/n_min + RU(tWCK2DQI(max)/tCK)) Units=nCK				
					16BANK mode		8BANK mode	4BANK/4BG mode	
				ALL mode	BL16	BL32	BL32	BL16	BL32
533	2:1	10	133	WL - 1	WL + 5	WL + 9	WL + 9	-	-
1067	2:1	133	267	WL - 2	WL + 5	WL + 9	WL + 9	-	-
1600	2:1	267	400	WL - 2	WL + 5	WL + 9	WL + 9	-	-
2133	2:1	400	533	WL - 3	WL + 5	WL + 9	WL + 9	-	-
2750	2:1	533	688	WL - 3	WL + 5	WL + 9	WL + 9	-	-
3200	2:1	688	800	WL - 4	WL + 5	WL + 9	WL + 9	-	-
533	4:1	5	67	WL - 1	WL + 3	WL + 5	WL + 5	-	-
1067	4:1	67	133	WL - 1	WL + 3	WL + 5	WL + 5	-	-
1600	4:1	133	200	WL - 1	WL + 3	WL + 5	WL + 5	-	-
2133	4:1	200	267	WL - 2	WL + 3	WL + 5	WL + 5	-	-
2750	4:1	267	344	WL - 2	WL + 3	WL + 5	WL + 5	-	-
3200	4:1	344	400	WL - 2	WL + 3	WL + 5	WL + 5	-	-
3733	4:1	400	467	WL - 2	-	-	WL + 5	WL + 3	WL + 7
4267	4:1	467	533	WL - 3	-	-	WL + 5	WL + 3	WL + 7
4800	4:1	533	600	WL - 3	-	-	WL + 5	WL + 3	WL + 7
5500	4:1	600	688	WL - 3	-	-	WL + 5	WL + 3	WL + 7
6000	4:1	688	750	WL - 3	-	-	WL + 5	WL + 3	WL + 7
6400	4:1	750	800	WL - 3	-	-	WL + 5	WL + 3	WL + 7

7.6.4.2.2 Asynchronous ODT for Data Bus (Cont'd)

Table 234 — Asynchronous ODT Turn On and Turn Off Timing

Parameter	ALL Operation Frequency	Unit
tODTon,min	1.5	ns
tODTon,max	3.5	ns
tODToff,min	1.5	ns
tODToff,max	3.5	ns

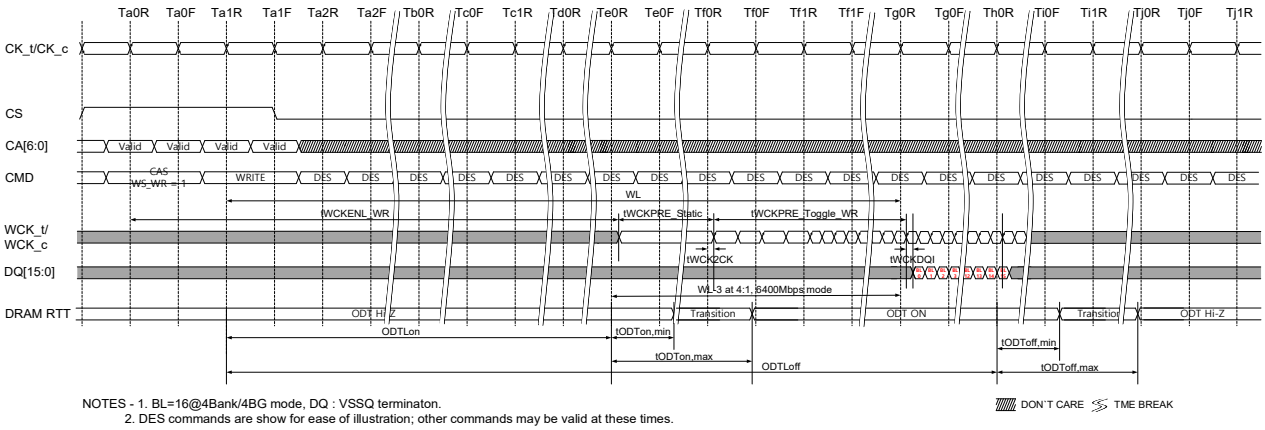

NOTE 1 BL=16@4Bank/4BG mode, DQ: VSSQ termination.
NOTE 2 DES commands are show for ease of illustration; other commands may be valid at these times.

Figure 161 — Asynchronous ODTon/ODToff Timing

7.6.4.2.3 ODT Mode Register and ODT Characteristics for Data Bus

On-Die Termination effective resistance RTT is defined by MR11 OP[2:0]. ODT is applied to the DQ, DMI, RDQS_t/c pins. A functional representation of the on-die termination is shown in Figure **162**.

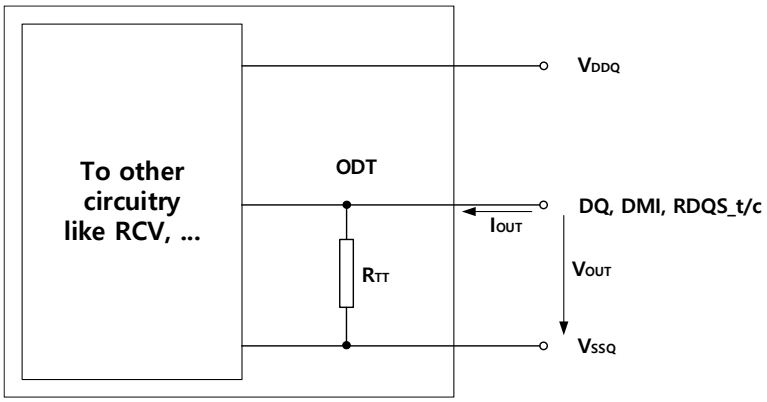

Figure 162 — On Die Termination for Data Bus

7.6.4.2.3 ODT Mode Register and ODT Characteristics for Data Bus (Cont'd)

Table 235 — ODT DC Electrical Characteristics, assuming RZQ = 240Ω±1% over the entire operating temperature range after a proper ZQ calibration

MR11 OP[2:0]	RTT	Vout	Min	Nom	Max	Unit	Note
001	240Ω	VOLdc = 0.2*VDDQ	0.8	1.0	1.1	RZQ	1,2,3
		VOMdc = 0.5*VDDQ	0.9	1.0	1.1	RZQ	1,2,3
		VOHdc = 0.75*VDDQ	0.9	1.0	1.3	RZQ	1,2,3
010	120Ω	VOLdc = 0.2*VDDQ	0.8	1.0	1.1	RZQ/2	1,2,3
		VOMdc = 0.5*VDDQ	0.9	1.0	1.1	RZQ/2	1,2,3
		VOHdc = 0.75*VDDQ	0.9	1.0	1.3	RZQ/2	1,2,3
011	80Ω	VOLdc = 0.2*VDDQ	0.8	1.0	1.1	RZQ/3	1,2,3
		VOMdc = 0.5* VDDQ	0.9	1.0	1.1	RZQ/3	1,2,3
		VOHdc = 0.75*VDDQ	0.9	1.0	1.3	RZQ/3	1,2,3
100	60Ω	VOLdc = 0.2*VDDQ	0.8	1.0	1.1	RZQ/4	1,2,3
		VOMdc = 0.5*VDDQ	0.9	1.0	1.1	RZQ/4	1,2,3
		VOHdc = 0.75*VDDQ	0.9	1.0	1.3	RZQ/4	1,2,3
101	48Ω	VOLdc = 0.2*VDDQ	0.8	1.0	1.1	RZQ/5	1,2,3
		VOMdc = 0.5*VDDQ	0.9	1.0	1.1	RZQ/5	1,2,3
		VOHdc = 0.75*VDDQ	0.9	1.0	1.3	RZQ/5	1,2,3
110	40Ω	VOLdc = 0.2*VDDQ	0.8	1.0	1.1	RZQ/6	1,2,3
		VOMdc = 0.5*VDDQ	0.9	1.0	1.1	RZQ/6	1,2,3
		VOHdc = 0.75*VDDQ	0.9	1.0	1.3	RZQ/6	1,2,3
Mismatch DQ-DQ within byte		0.5*VDDQ	-		2	%	1,2,4

NOTE 1 The tolerance limits are specified after calibration with stable voltage and temperature. For the behavior of the tolerance limits if temperature or voltage changes after calibration, see 15.9.

NOTE 2 Pull-Dn ODT resistors are recommended to be calibrated at 0.5*VDDQ. Other calibration schemes may be used to achieve the linearity spec shown, e.g., calibration at 0.2* VDDQ and 0.75*VDDQ.

NOTE 3 Measurement definition for RTT: TBD

NOTE 4 DQ to DQ mismatch within byte variation for a given component (characterized).

$$\mathbf{DQ-DQ(Mismatch)} = \frac{\boldsymbol{RTT(max)} - \boldsymbol{RTT(min)}}{\boldsymbol{RTT(avg)}}$$

7.6.4.3 On-Die Termination for WCK_t and WCK_c

WCK ODT (On-Die Termination) is a feature of the LPDDR5 SDRAM that allows the SDRAM to turn on/off termination resistance for WCK_t and WCK_c signals without the ODT control pin. The ODT feature is designed to improve signal integrity of the memory channel by allowing the DRAM controller to turn on and off termination resistance for DRAM devices via Mode Register setting. A simple functional representation of the DRAM ODT feature is shown in Figure 152.

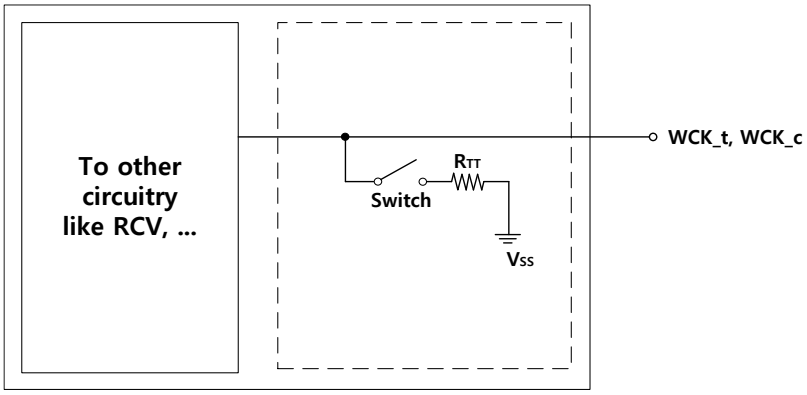

Figure 163 — Functional Representation of WCK ODT

7.6.4.3.1 ODT Mode Register for WCK_t/c

The WCK ODT termination values are set and enabled via MR18. The WCK ODT resistance values are set by MR18 OP[2:0]. The default state for the WCK is ODT disabled.

The WCK ODT of the device always maintains the present ODT status except that the device is in the Power-Down or Self-Refresh Power-Down or Deep Sleep Mode.

7.6.4.3.2 ODT during WCK2CK training

If the WCK ODT is enabled in MR18 OP[2:0], in WCK2CK training mode, DRAM always provides the termination on WCK_t/WCK_c signals with pre-defined ODT value by MR18 OP[2:0]. DQ termination is always off in WCK2CK training mode.

7.6.4.4 ODT Mode Register and ODT Characteristics for CS

CS ODT(On-Die Termination) is a feature of the LPDDR5 SDRAM that allows the DRAM to turn on/off termination resistance for CS signal. The ODT feature is designed to improve signal integrity of the memory channel by allowing the DRAM controller to turn on with specific RZQ value and off termination resistance for any target DRAM devices via Mode Register setting. A simple functional representation of the CS ODT feature is shown in **Figure 164**.

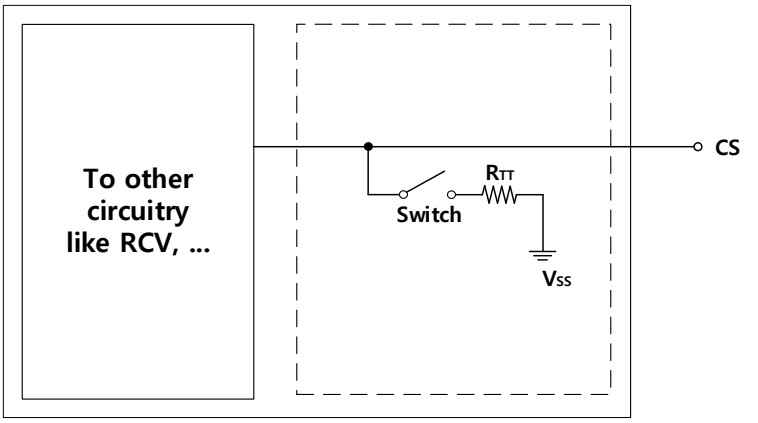

Figure 164 - Functional Representation of CS

7.6.4.4.1 ODT Mode Register and ODT Characteristics for CS

On-Die Termination effective resistance RTT of the CS pin is enabled by MR17 OP[4] with RZQ/3. The Vout level is driven from the VDD2H with VDDQ based ZQ codes. The CS ODT is not allowable in VDDQ power rail. A functional representation of the on-die termination is shown in **Figure 165**.

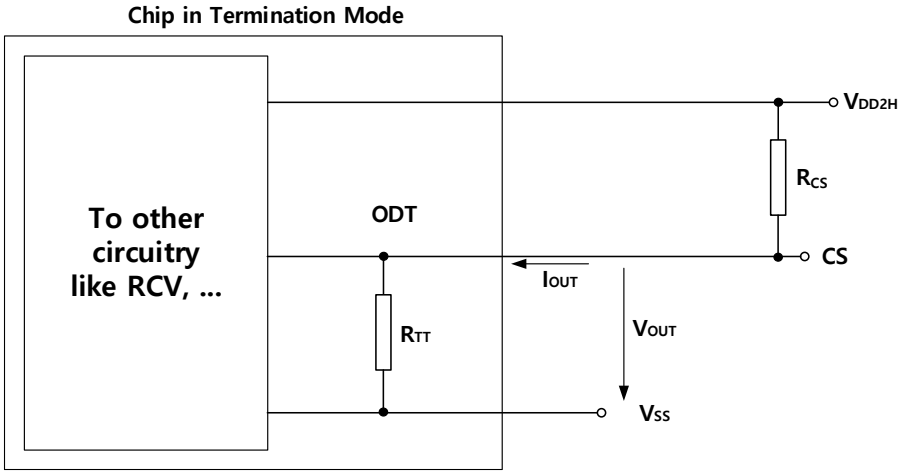

Figure 165 - On Die Termination for CS

Table 236 - CS ODT DC Electrical Characteristics, assuming RZQ = 240Ω±1% over the entire operating temperature range after a proper ZQ calibration

MR17 OP[4]	RTT	R_{CS}	Min	Nom	Max	Unit	Note
0	RZQ/3	40ohm	1.2	-	2.1	RZQ	1,2,3
		60ohm	1.2	-	1.9	RZQ	1,2,3

NOTE 1 The tolerance limits are specified after calibration with stable voltage and temperature. For the behavior of the tolerance limits if temperature or voltage changes after calibration, see TBD.
NOTE 2 Pull-Dn ODT resistors are recommended to be calibrated at 0.5*VDDQ.
NOTE 3 Measurement definition for RTT : TBD

7.6.5 Non-target DRAM ODT

LPDDR5 SDRAM supports the Non-target DRAM ODT function for DQ, DMI and RDQS pins to improve signal integrity in 2-rank configuration. The Non-target DRAM ODT function is enabled by MR11 OP[3]=1_B and its ODT value is set by MR41 OP[7:5]. The Non-target DRAM ODT is activated at all states. A simple DRAM ODT configuration at Read and Write case is shown in **Figure 166**. Non-target ODT enabling pins should be driven Low in standby mode to avoid leakage current. Also, loopback test function for debug and testing purpose between SDRAM and SOC can be supported by enabling MR41 OP [7:5] Non-target ODT setting.

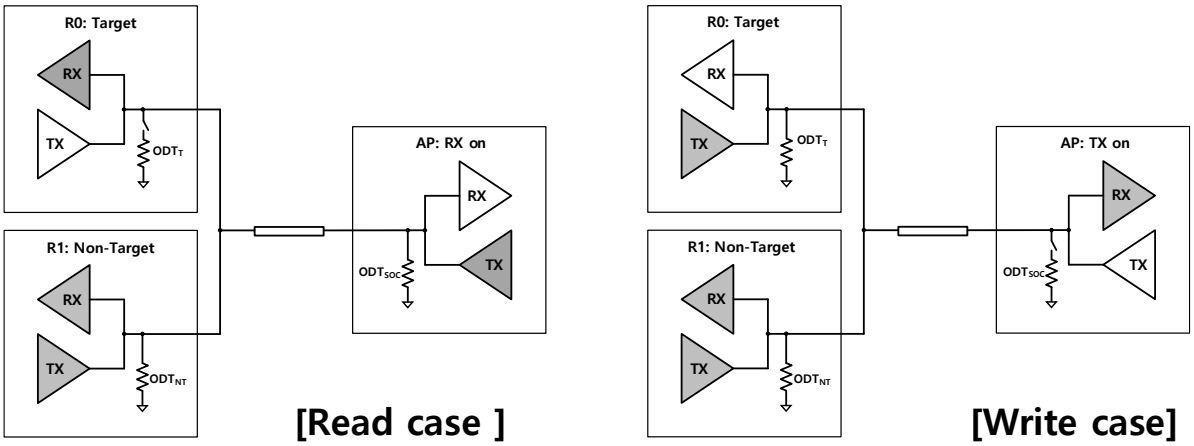

Figure 166 - DRAM ODT configuration of Non-target DRAM ODT mode

Table 237 - Table 1. Non-target and Target ODT status depending on DRAM state

Current DRAM State	Non-Target DRAM	Target DRAM
Power Down	Enable **(MR41 OP[7:5])**	Enable **(MR41 OP[7:5])**
Self-Refresh Power Down	Enable **(MR41 OP[7:5])**	Enable **(MR41 OP[7:5])**
Deep Sleep Mode	Enable **(MR41 OP[7:5])**	Enable **(MR41 OP[7:5])**
Pre-charge/Active Standby	Enable **(MR41 OP[7:5])**	Enable **(MR41 OP[7:5])**
Write/Write FIFO	Enable **(MR41 OP[7:5])**	Enable **(MR11 OP[2:0])**
Read/Read FIFO/Read DQ Calibration/MRR	Enable **(MR41 OP[7:5])**	PDDS/PUDS

7.6.5.1 Non-target DRAM ODT control

In Non-Target ODT (NT-ODT) mode, Target DRAM ODT and Non-Target DRAM ODT can be set by MR11 OP[3] and MR41 OP[7:5] and NT-ODT needs to be used with Target ODT. It means that a following MR combination is inhibited: DQ ODT: MR11 OP[2:0] =000_B and NT-ODT Enable: MR11 OP[3]=1_B. If using NT-ODT function, following things should be considered: VIH specification of DQ is satisfied for Write operation. In Read operation, since SDRAM calibrates Pull-Up strength to satisfy VOH specification according as SoC ODT of MR17 OP[2:0], SoC ODT of MR17 OP[2:0] should be the same as equivalent resistance of NT-ODT (MR41 OP[7:5]) and ODT of SoC Rx. Notice that the ODT value of non-target rank should be always one fixed level irrespective of read/write operation and NT-ODT should be disabled in case of VRO enabled by MR13 OP[2]. Refer to the table below for more information.

Table 238 - Normal Mode vs. NT-ODT Mode for Write Operation

Mode MR11 OP[3]	Target Rank ODT	Non-Target Rank ODT	Equivalent ODT of 2-Rank DRAM
OP[3]=0 (Normal Mode)	MR11 OP[2:0] (ODT_T)	Disable	ODT_T
OP[3]=1 (NT-ODT Mode)	MR11 OP[2:0] (ODT_T)	MR41 OP[7:5] (ODT_{NT})	ODT_T || ODT_{NT}

Table 239 - Table 1. Normal Mode vs. NT-ODT Mode for Read Operation

Mode MR11 OP[3]	Non-Target Rank ODT	SoC Rx ODT	Equivalent ODT for RD operation	MR17 OP[2:0] (SoC ODT for DRAM Pull-Up Cal.)
OP[3]=0 (Normal Mode)	Disable	ODT_{SOC}	ODT_{SOC}	ODT_{SOC}
OP[3]=1 (NT-ODT Mode)	MR41 OP[7:5] (ODT_{NT})	ODT_{SOC}	ODT_{NT} || ODT_{SOC}	ODT_{NT} || ODT_{SOC}[1]

NOTE 1 Since SoC ODT of MR17 can only support RZQ/n (n=1,2,3,4,5,6), (ODTNT||ODTSOC) should be one of RZQ/1, RZQ/2, RZQ/3, RZQ/4, RZQ/5, and RZQ/6.

Table 240 shows all combinations that equivalent ODT is RZQ/1, RZQ/2, RZQ/3, RZQ/4, RZQ/5, or RZQ/6.

Table 240 - Combination of Target ODT, Non-target ODT and SoC ODT

ODT_{NT}	ODT_T	ODT_{SoC}	Write (ODT_{eq}=ODT_{NT} ‖ ODT_T)	Read (SoC ODT MR17 OP[2:0])
RZQ/1	RZQ/1	RZQ/0	RZQ/2	RZQ/1
	RZQ/2	RZQ/1	RZQ/3	RZQ/2
	RZQ/3	RZQ/2	RZQ/4	RZQ/3
	RZQ/4	RZQ/3	RZQ/5	RZQ/4
	RZQ/5	RZQ/4	RZQ/6	RZQ/5
	-	RZQ/5	-	RZQ/6
RZQ/2	RZQ/1	RZQ/0	RZQ/3	RZQ/2
	RZQ/2	RZQ/1	RZQ/4	RZQ/3
	RZQ/3	RZQ/2	RZQ/5	RZQ/4
	RZQ/4	RZQ/3	RZQ/6	RZQ/5
	-	RZQ/4	-	RZQ/6
RZQ/3	RZQ/1	RZQ/0	RZQ/4	RZQ/3
	RZQ/2	RZQ/1	RZQ/5	RZQ/4
	RZQ/3	RZQ/2	RZQ/6	RZQ/5
	-	RZQ/3	-	RZQ/6
RZQ/4	RZQ/1	RZQ/0	RZQ/5	RZQ/4
	RZQ/2	RZQ/1	RZQ/6	RZQ/5
	-	RZQ/2	-	RZQ/6
RZQ/5	RZQ/1	RZQ/0	RZQ/6	RZQ/5
	-	RZQ/1	-	RZQ/6
RZQ/6	RZQ/0	RZQ/0	RZQ/6	RZQ/6

Table 241 - DMI ODT setting example in NT-ODT Mode

Read Link ECC MR22 OP[7:6]	DMD MR13 OP[5]	DBI WR MR3 OP[7]	DBI RD MR3 OP[6]	RDCFE MR21 OP[5]	DMI
00_B	0_B	0_B	0_B	0_B	NT-ODT
00_B	0_B	0_B	0_B	1_B	NT-ODT
00_B	0_B	0_B	1_B	0_B	NT-ODT
00_B	0_B	0_B	1_B	1_B	NT-ODT
00_B	0_B	1_B	0_B	0_B	NT-ODT
00_B	0_B	1_B	0_B	1_B	NT-ODT
00_B	0_B	1_B	1_B	0_B	NT-ODT
00_B	0_B	1_B	1_B	1_B	NT-ODT
00_B	1_B	0_B	0_B	0_B	Disable
00_B	1_B	0_B	0_B	1_B	NT-ODT
00_B	1_B	0_B	1_B	0_B	NT-ODT
00_B	1_B	0_B	1_B	1_B	NT-ODT
00_B	1_B	1_B	0_B	0_B	NT-ODT
00_B	1_B	1_B	0_B	1_B	NT-ODT
00_B	1_B	1_B	1_B	0_B	NT-ODT
00_B	1_B	1_B	1_B	1_B	NT-ODT
01_B	0_B	0_B	0_B	0_B	NT-ODT
01_B	0_B	0_B	0_B	1_B	NT-ODT
01_B	0_B	0_B	1_B	0_B	NT-ODT
01_B	0_B	0_B	1_B	1_B	NT-ODT
01_B	0_B	1_B	0_B	0_B	NT-ODT
01_B	0_B	1_B	0_B	1_B	NT-ODT
01_B	0_B	1_B	1_B	0_B	NT-ODT
01_B	0_B	1_B	1_B	1_B	NT-ODT
01_B	1_B	0_B	0_B	0_B	NT-ODT
01_B	1_B	0_B	0_B	1_B	NT-ODT
01_B	1_B	0_B	1_B	0_B	NT-ODT
01_B	1_B	0_B	1_B	1_B	NT-ODT
01_B	1_B	1_B	0_B	0_B	NT-ODT
01_B	1_B	1_B	0_B	1_B	NT-ODT
01_B	1_B	1_B	1_B	0_B	NT-ODT
01_B	1_B	1_B	1_B	1_B	NT-ODT

Table 242 - RDQS_t/c ODT setting example in NT-ODT Mode

WCK-DQS_t/Parity Training MP46 OP[2]	Write Link ECC MR22 OP[5:4]	RDQS MR20 OP [1:0]	RDQS_t	RDQS_c
0_B	00_B	00_B	Disable	Disable
0_B	00_B	01_B	NT-ODT	Disable
0_B	00_B	10_B	NT-ODT	NT-ODT
0_B	00_B	11_B	Disable	NT-ODT
0_B	01_B	00_B	NT-ODT	Disable
0_B	01_B	01_B	NT-ODT	Disable
0_B	01_B	10_B	NT-ODT	NT-ODT
0_B	01_B	11_B	NT-ODT	NT-ODT
1_B	00_B	00_B	NT-ODT	Disable
1_B	00_B	01_B	NT-ODT	Disable
1_B	00_B	10_B	NT-ODT	NT-ODT
1_B	00_B	11_B	NT-ODT	NT-ODT
1_B	01_B	00_B	NT-ODT	Disable
1_B	01_B	01_B	NT-ODT	Disable
1_B	01_B	10_B	NT-ODT	NT-ODT
1_B	01_B	11_B	NT-ODT	NT-ODT

NOTE 1 Following MR setting, SDRAMs connected to the same data bus line is required to have same setting.
- Write Link ECC MR22 OP[5:4]
- Read Link ECC MR22 OP[7:6]
- DBI-WR MR3 OP[7]
- DBI RD MR3 OP[6]
- DMD MR13 OP[5]
- WDCFE MR21 OP[4]
- RDCFE MR21 OP[5]
- RDQS MR20 OP[1:0]
- WCK-DQS_t/Parity Training MR46 OP[2]

7.6.5.2 Asynchronous NT-ODT

The NT-ODT is enabled by MR11 OP[3] and a target ODT of DRAM is controlled by Write related commands such as Write, Masked Write, Write FIFO command or Read related commands such as Read, MRR, Read DQ Calibration, Read FIFO command. the ODT of each DRAM is turned on with NT-ODT value (MR41 OP[2:0]). The controller can check that LPDDR5 SDRAM supports the separate DQ NT-ODT timing from RDQS NT-ODT timing by MR0 OP[0] (MR0 OP[0]=0_B: Same NT-ODT timing for DQ/RDQS, OP[0]=1_B: Separate DQ NT-ODT timing from RDQS NT-ODT timing). When Write, Mask Write or Read command is issued to the target DRAM, according to timing parameters like ODTLon_(RD/RD_DQ/RDQS), tODT_(RD)on, ODTLoff_(RD/RD_DQ/RDQS) or tODT_(RD)off, the ODT of the target DRAM is controlled. Following timing parameters apply when DRAM NT-ODT mode is enabled.

- ODTLon, tODTon,min, tODTon,max
- ODTLoff, tODToff,min, tODToff,max
- ODTLon_RD/RD_DQ/RDQS, tODT_RDon,min, tODT_RDon,max
- ODTLoff_RD/RD_DQ/RDQS, tODT_RDoff,min, tODT_RDoff,max

Table 243 - MR0 OP[0] for NT-ODT timing mode

Function	Register Type	Operand	Data
NT-ODT timing mode	Read-Only	OP[0]	0_B: Same NT-ODT timing for DQ/RDQS 1_B: Separate DQ NT-ODT timing from RDQS NT-ODT timing

ODTLon is a synchronous parameter and it is the latency from the Write related command such as Write or Masked Write, Write FIFO command (the rising edge of the clock) to tODTon reference. ODTLon latency is a fixed latency value for each operation frequency range. Each operation frequency range has a different ODTLon latency. Minimum RTT turn-on time (tODTon,min) is the point in time when the device termination circuit leaves high impedance state and NT-ODT resistance begins to turn on. Maximum RTT turn-on time (tODTon,max) is the point in time when the ODT resistance is fully on. tODTon,min and tODTon,max are measured once ODTLon latency is satisfied from the Write or Mask Write command.
ODTLoff is a synchronous parameter and it is the latency from the Write or Mask Write command (the rising edge of the clock) to tODToff reference. ODTLoff latency is a fixed latency value for each operation frequency range. Each operation frequency range has a different ODTLoff latency. Minimum RTT turn-off time (tODToff,min) is the point in time when the device termination circuit starts to turn off the NT-ODT resistance. Maximum NT-ODT turn-off time (tODToff,max) is the point in time when the on-die termination has reached high impedance. tODToff,min and tODToff,max are measured once ODTLoff latency is satisfied from the Write or Mask Write command.

ODTLoff_RD/RD_DQ/RDQS is a synchronous parameter and it is the latency from the Read command(the rising edge of the clock) to tODT_RDoff reference. ODTLoff_RD/RD_DQ/RDQS latency is a fixed latency value for each operation frequency range. Each operation frequency range has a different ODTLoff_RD/RD_DQ/RDQS latency. Minimum RTT turn-off time (tODT_RDoff,min) is the point in time when the device termination circuit starts to turn off the NT-ODT resistance. Maximum NT-ODT turn-off time (tODT_RDoff,max) is the point in time when the on-die termination has reached high impedance. tODT_RDoff,min and tODT_RDoff,max are measured once ODTLoff latency is satisfied from the Read command. ODTLon_RD/RD_DQ/RDQS is a synchronous parameter and it is the latency from the Read command (the rising edge of the clock) to tODT_RDon reference. ODTLon_RD/RD_DQ/RDQS latency is a fixed latency value for each operation frequency range. Each operation frequency range has a different ODTLon_RD/RD_DQ/RDQS latency. Minimum RTT turn-on time (tODT_RDon,min) is the point in time when the device termination circuit leaves high impedance state and NT-ODT resistance begins to turn on. Maximum RTT turn-on time (tODT_RDon,max) is the point in time when the ODT resistance is fully on. tODT_RDon,min and tODT_RDon,max are measured once ODTLon_RD/RD_DQ/RDQS latency is satisfied from the Read command.

Table 244 - ODTLon and ODTLoff Latency Values for Write

Data Rate	WCK:CK Ratio	Lower Clock Frequency Limit (>) (MHz)	Upper Clock Frequency Limit (<=) (MHz)	ODTLon Units=nCK	ODTLoff (WL + BL/n_min + RU(tWCK2DQI(max)/tCK)) Units=nCK				
				ALL mode	16B mode		8B mode	BG mode	
					BL16	BL32	BL32	BL16	BL32
533	2:1	10	133	WL - 1	WL + 5	WL + 9	WL + 9	-	-
1067	2:1	133	267	WL - 2	WL + 5	WL + 9	WL + 9	-	-
1600	2:1	267	400	WL - 2	WL + 5	WL + 9	WL + 9	-	-
2133	2:1	400	533	WL - 3	WL + 5	WL + 9	WL + 9	-	-
2750	2:1	533	688	WL - 3	WL + 5	WL + 9	WL + 9	-	-
3200	2:1	688	800	WL - 4	WL + 5	WL + 9	WL + 9	-	-
533	4:1	5	67	WL - 1	WL + 3	WL + 5	WL + 5	-	-
1067	4:1	67	133	WL - 1	WL + 3	WL + 5	WL + 5	-	-
1600	4:1	133	200	WL - 1	WL + 3	WL + 5	WL + 5	-	-
2133	4:1	200	267	WL - 2	WL + 3	WL + 5	WL + 5	-	-
2750	4:1	267	344	WL - 2	WL + 3	WL + 5	WL + 5	-	-
3200	4:1	344	400	WL - 2	WL + 3	WL + 5	WL + 5	-	-
3733	4:1	400	467	WL - 2	-	-	WL + 5	WL + 3	WL + 7
4267	4:1	467	533	WL - 3	-	-	WL + 5	WL + 3	WL + 7
4800	4:1	533	600	WL - 3	-	-	WL + 5	WL + 3	WL + 7
5500	4:1	600	688	WL - 3	-	-	WL + 5	WL + 3	WL + 7
6000	4:1	688	750	WL - 3	-	-	WL + 5	WL + 3	WL + 7
6400	4:1	750	800	WL - 3	-	-	WL + 5	WL + 3	WL + 7

Table 245 - Asynchronous NT-ODT Turn On and Turn off Timing for Write

Parameter	ALL Operation Frequency	Unit
tODTon,min	1.5	ns
tODTon,max	3.5	ns
tODToff,min	1.5	ns
tODToff,max	3.5	ns

Table 246 - ODTLon_RD and ODTLoff_RD Latency Values for Read with RDQS disabled (MR0 OP[0]=0_B)

Data Rate	WCK:CK Ratio	Lower Clock Frequency Limit (>) (MHz)	Upper Clock Frequency Limit (<=) (MHz)	ODTLoff_RD Units=nCK	ODTLon_RD (RL + BL/n_min + RU(tWCK2DQO(max)/tCK)) Units=nCK				
				ALL mode	16B mode		8B mode	BG mode	
					BL16	BL32	BL32	BL16	BL32
533	2:1	10	133	RL - 1	RL + 5	RL + 9	RL + 9	-	-
1067	2:1	133	267	RL - 2	RL + 5	RL + 9	RL + 9	-	-
1600	2:1	267	400	RL - 2	RL + 5	RL + 9	RL + 9	-	-
2133	2:1	400	533	RL - 3	RL + 6	RL + 10	RL + 10	-	-
2750	2:1	533	688	RL - 3	RL + 6	RL + 10	RL + 10	-	-
3200	2:1	688	800	RL - 4	RL + 6	RL + 10	RL + 10	-	-
533	4:1	5	67	RL - 1	RL + 3	RL + 5	RL + 5	-	-
1067	4:1	67	133	RL - 1	RL + 3	RL + 5	RL + 5	-	-
1600	4:1	133	200	RL - 1	RL + 3	RL + 5	RL + 5	-	-
2133	4:1	200	267	RL - 2	RL + 3	RL + 5	RL + 5	-	-
2750	4:1	267	344	RL - 2	RL + 3	RL + 5	RL + 5	-	-
3200	4:1	344	400	RL - 2	RL + 3	RL + 5	RL + 5	-	-
3733	4:1	400	467	RL - 2	-	-	RL + 5	RL + 3	RL + 7
4267	4:1	467	533	RL - 3	-	-	RL + 6	RL + 4	RL + 8
4800	4:1	533	600	RL - 3	-	-	RL + 6	RL + 4	RL + 8
5500	4:1	600	688	RL - 3	-	-	RL + 6	RL + 4	RL + 8
6000	4:1	688	750	RL - 3	-	-	RL + 6	RL + 4	RL + 8
6400	4:1	750	800	RL - 3	-	-	RL + 6	RL + 4	RL + 8

Table 247 - ODTLon_RD and ODTLoff_RD Latency Values for Read with RDQS enabled & MR10 OP[5:4]=00_B, 01_B, 10_B ($MR0\ OP[0]=0_B$)

Data Rate	WCK:CK Ratio	Lower Clock Frequency Limit (>) (MHz)	Upper Clock Frequency Limit (<=) (MHz)	ODTLoff_RD Units=nCK	ODTLon_RD (RL + BL/n_min + RU(tWCK2DQO(max)/tCK) + 2) Units=nCK at CKR=2:1 ODTLon_RD (RL + BL/n_min + RU(tWCK2DQO(max)/tCK) + 1) Units=nCK at CKR=4:1				
				ALL mode	16B mode		8B mode	BG mode	
					BL16	BL32	BL32	BL16	BL32
533	2:1	10	133	RL - 3	RL + 7	RL + 11	RL + 11	-	-
1067	2:1	133	267	RL - 4	RL + 7	RL + 11	RL + 11	-	-
1600	2:1	267	400	RL - 4	RL + 7	RL + 11	RL + 11	-	-
2133	2:1	400	533	RL - 5	RL + 8	RL + 12	RL + 12	-	-
2750	2:1	533	688	RL - 5	RL + 8	RL + 12	RL + 12	-	-
3200	2:1	688	800	RL - 6	RL + 8	RL + 12	RL + 12	-	-
533	4:1	5	67	RL - 2	RL + 4	RL + 6	RL + 6	-	-
1067	4:1	67	133	RL - 2	RL + 4	RL + 6	RL + 6	-	-
1600	4:1	133	200	RL - 2	RL + 4	RL + 6	RL + 6	-	-
2133	4:1	200	267	RL - 3	RL + 4	RL + 6	RL + 6	-	-
2750	4:1	267	344	RL - 3	RL + 4	RL + 6	RL + 6	-	-
3200	4:1	344	400	RL - 3	RL + 4	RL + 6	RL + 6	-	-
3733	4:1	400	467	RL - 3	-	-	RL + 6	RL + 4	RL + 8
4267	4:1	467	533	RL - 4	-	-	RL + 7	RL + 5	RL + 9
4800	4:1	533	600	RL - 4	-	-	RL + 7	RL + 5	RL + 9
5500	4:1	600	688	RL - 4	-	-	RL + 7	RL + 5	RL + 9
6000	4:1	688	750	RL - 4	-	-	RL + 7	RL + 5	RL + 9
6400	4:1	750	800	RL - 4	-	-	RL + 7	RL + 5	RL + 9

Table 248 - ODTLon_RD and ODTLoff_RD Latency Values for Read with RDQS enabled & MR10 OP[5:4]=11B (MR0 OP[0]=0B)

Data Rate	WCK:CK Ratio	Lower Clock Frequency Limit (>) (MHz)	Upper Clock Frequency Limit (<=) (MHz)	ODTLoff_RD Units=nCK	ODTLon_RD (RL + BL/n_min + RU(tWCK2DQO(max)/tCK) + 1) Units=nCK, at CKR=4:1				
				ALL mode	16B mode		8B mode	BG mode	
					BL16	BL32	BL32	BL16	BL32
3733	4:1	400	467	RL - 4	-	-	RL + 6	RL + 4	RL + 8
4267	4:1	467	533	RL - 5	-	-	RL + 7	RL + 5	RL + 9
4800	4:1	533	600	RL - 5	-	-	RL + 7	RL + 5	RL + 9
5500	4:1	600	688	RL - 5	-	-	RL + 7	RL + 5	RL + 9
6000	4:1	688	750	RL - 5	-	-	RL + 7	RL + 5	RL + 9
6400	4:1	750	800	RL - 5	-	-	RL + 7	RL + 5	RL + 9

Table 249 - ODTLon_RD_DQ and ODTLoff_RD_DQ Latency Values for Read (MR0 OP[0]=1B)

Data Rate	WCK:CK Ratio	Lower Clock Frequency Limit (>) (MHz)	Upper Clock Frequency Limit (<=) (MHz)	ODTLoff_RD_DQ Units=nCK	ODTLon_RD_DQ (RL + BL/n_min + RU(tWCK2DQO(max)/tCK)) Units=nCK				
				ALL mode	16B mode		8B mode	BG mode	
					BL16	BL32	BL32	BL16	BL32
533	2:1	10	133	RL - 1	RL + 5	RL + 9	RL + 9	-	-
1067	2:1	133	267	RL - 2	RL + 5	RL + 9	RL + 9	-	-
1600	2:1	267	400	RL - 2	RL + 5	RL + 9	RL + 9	-	-
2133	2:1	400	533	RL - 3	RL + 6	RL + 10	RL + 10	-	-
2750	2:1	533	688	RL - 3	RL + 6	RL + 10	RL + 10	-	-
3200	2:1	688	800	RL - 4	RL + 6	RL + 10	RL + 10	-	-
533	4:1	5	67	RL - 1	RL + 3	RL + 5	RL + 5	-	-
1067	4:1	67	133	RL - 1	RL + 3	RL + 5	RL + 5	-	-
1600	4:1	133	200	RL - 1	RL + 3	RL + 5	RL + 5	-	-
2133	4:1	200	267	RL - 2	RL + 3	RL + 5	RL + 5	-	-
2750	4:1	267	344	RL - 2	RL + 3	RL + 5	RL + 5	-	-
3200	4:1	344	400	RL - 2	RL + 3	RL + 5	RL + 5	-	-
3733	4:1	400	467	RL - 2	-	-	RL + 5	RL + 3	RL + 7
4267	4:1	467	533	RL - 3	-	-	RL + 6	RL + 4	RL + 8
4800	4:1	533	600	RL - 3	-	-	RL + 6	RL + 4	RL + 8
5500	4:1	600	688	RL - 3	-	-	RL + 6	RL + 4	RL + 8
6000	4:1	688	750	RL - 3	-	-	RL + 6	RL + 4	RL + 8
6400	4:1	750	800	RL - 3	-	-	RL + 6	RL + 4	RL + 8

Table 250 - ODTLon_RD_RDQS and ODTLoff_RD_RDQS Latency Values for Read with RDQS disabled (MR0 OP[0]=1_B)

Data Rate	WCK:CK Ratio	Lower Clock Frequency Limit (>) (MHz)	Upper Clock Frequency Limit (<=) (MHz)	ODTLoff_RD_RDQS Units=nCK	ODTLon_RD_RDQS (RL + BL/n_min + RU(tWCK2DQO(max)/tCK)) Units=nCK				
				ALL mode	16B mode		8B mode	BG mode	
					BL16	BL32	BL32	BL16	BL32
533	2:1	10	133	RL - 1	RL + 5	RL + 9	RL + 9	-	-
1067	2:1	133	267	RL - 2	RL + 5	RL + 9	RL + 9	-	-
1600	2:1	267	400	RL - 2	RL + 5	RL + 9	RL + 9	-	-
2133	2:1	400	533	RL - 3	RL + 6	RL + 10	RL + 10	-	-
2750	2:1	533	688	RL - 3	RL + 6	RL + 10	RL + 10	-	-
3200	2:1	688	800	RL - 4	RL + 6	RL + 10	RL + 10	-	-
533	4:1	5	67	RL - 1	RL + 3	RL + 5	RL + 5	-	-
1067	4:1	67	133	RL - 1	RL + 3	RL + 5	RL + 5	-	-
1600	4:1	133	200	RL - 1	RL + 3	RL + 5	RL + 5	-	-
2133	4:1	200	267	RL - 2	RL + 3	RL + 5	RL + 5	-	-
2750	4:1	267	344	RL - 2	RL + 3	RL + 5	RL + 5	-	-
3200	4:1	344	400	RL - 2	RL + 3	RL + 5	RL + 5	-	-
3733	4:1	400	467	RL - 2	-	-	RL + 5	RL + 3	RL + 7
4267	4:1	467	533	RL - 3	-	-	RL + 6	RL + 4	RL + 8
4800	4:1	533	600	RL - 3	-	-	RL + 6	RL + 4	RL + 8
5500	4:1	600	688	RL - 3	-	-	RL + 6	RL + 4	RL + 8
6000	4:1	688	750	RL - 3	-	-	RL + 6	RL + 4	RL + 8
6400	4:1	750	800	RL - 3	-	-	RL + 6	RL + 4	RL + 8

Table 251 - ODTLon_RD_RDQS and ODTLoff_RD_RDQS Latency Values for Read with RDQS enabled & MR10 OP[5:4]=00_B, 01_B, 10_B (MR0 OP[0]=1_B)

Data Rate	WCK:CK Ratio	Lower Clock Frequency Limit (>) (MHz)	Upper Clock Frequency Limit (<=) (MHz)	ODTLoff_RD_RDQS Units=nCK	ODTLon_RD_RDQS (RL + BL/n_min + RU(tWCK2DQO(max)/tCK) + 2) Units=nCK at CKR=2:1 ODTLon_RD_RDQS (RL + BL/n_min + RU(tWCK2DQO(max)/tCK) + 1) Units=nCK at CKR=4:1				
				ALL mode	16B mode		8B mode	BG mode	
					BL16	BL32	BL32	BL16	BL32
533	2:1	10	133	RL - 3	RL + 7	RL + 11	RL + 11	-	-
1067	2:1	133	267	RL - 4	RL + 7	RL + 11	RL + 11	-	-
1600	2:1	267	400	RL - 4	RL + 7	RL + 11	RL + 11	-	-
2133	2:1	400	533	RL - 5	RL + 8	RL + 12	RL + 12	-	-
2750	2:1	533	688	RL - 5	RL + 8	RL + 12	RL + 12	-	-
3200	2:1	688	800	RL - 6	RL + 8	RL + 12	RL + 12	-	-
533	4:1	5	67	RL - 2	RL + 4	RL + 6	RL + 6	-	-
1067	4:1	67	133	RL - 2	RL + 4	RL + 6	RL + 6	-	-
1600	4:1	133	200	RL - 2	RL + 4	RL + 6	RL + 6	-	-
2133	4:1	200	267	RL - 3	RL + 4	RL + 6	RL + 6	-	-
2750	4:1	267	344	RL - 3	RL + 4	RL + 6	RL + 6	-	-
3200	4:1	344	400	RL - 3	RL + 4	RL + 6	RL + 6	-	-
3733	4:1	400	467	RL - 3	-	-	RL + 6	RL + 4	RL + 8
4267	4:1	467	533	RL - 4	-	-	RL + 7	RL + 5	RL + 9
4800	4:1	533	600	RL - 4	-	-	RL + 7	RL + 5	RL + 9
5500	4:1	600	688	RL - 4	-	-	RL + 7	RL + 5	RL + 9
6000	4:1	688	750	RL - 4	-	-	RL + 7	RL + 5	RL + 9
6400	4:1	750	800	RL - 4	-	-	RL + 7	RL + 5	RL + 9

Table 252 - ODTLon_RD_RDQS and ODTLoff_RD_RDQS Latency Values for Read with RDQS enabled & MR10 OP[5:4]=11B (MR0 OP[0]=1B)

Data Rate	WCK:CK Ratio	Lower Clock Frequency Limit (>) (MHz)	Upper Clock Frequency Limit (<=) (MHz)	ODTLoff_RD_RDQS Units=nCK	ODTLon_RD_RDQS (RL + BL/n_min + RU(tWCK2DQO(max)/tCK) + 1) Units=nCK, at CKR=4:1				
				ALL mode	16B mode		8B mode	BG mode	
					BL16	BL32	BL32	BL16	BL32
3733	4:1	400	467	RL - 4	-	-	RL + 6	RL + 4	RL + 8
4267	4:1	467	533	RL - 5	-	-	RL + 7	RL + 5	RL + 9
4800	4:1	533	600	RL - 5	-	-	RL + 7	RL + 5	RL + 9
5500	4:1	600	688	RL - 5	-	-	RL + 7	RL + 5	RL + 9
6000	4:1	688	750	RL - 5	-	-	RL + 7	RL + 5	RL + 9
6400	4:1	750	800	RL - 5	-	-	RL + 7	RL + 5	RL + 9

Table 253 - Asynchronous NT-ODT Turn On and Turn Off Timing

Parameter	ALL Operation Frequency	Unit
tODT_RDon,min	1.5	ns
tODT_RDon,max	3.5	ns
tODT_RDoff,min	1.5	ns
tODT_RDoff,max	3.5	ns

7.6.5.3 Timing diagram of Write case

In Non-target DRAM ODT enabled mode, ODT timings (ODTLon and ODTLoff) are referenced to WL after the write command and the ODT value in target rank can be updated within tODTon,max as shown in **Figure 167**. After write operation, target ODT value should be recovered to pre-defined Non-target DRAM ODT value within the tODToff,max.

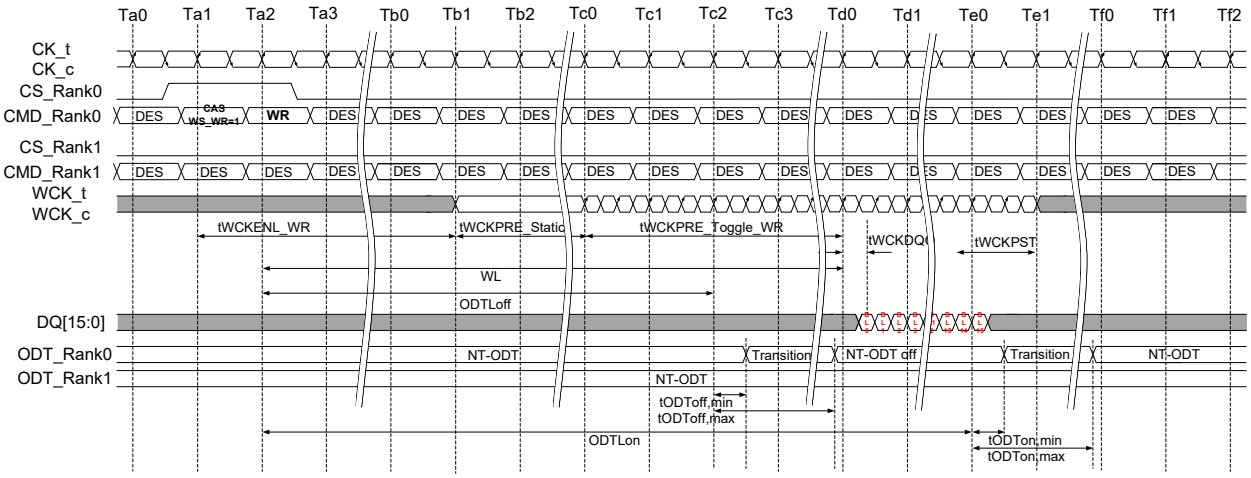

Figure 167 - ODT Control on Non-target DRAM for Write

7.6.5.4 Timing diagram of Read case

In Non-target DRAM ODT enabled mode, ODT timings (ODTLoff_RD/RD_DQ/RDQS) are referenced to RL after the read command and the ODT value in target rank is disabled within tODT_RDoff,max as shown in **Figure 168**. After read operation, disabled ODT should be recovered to pre-defined Non-target DRAM ODT value within the tODT_RDon,max.

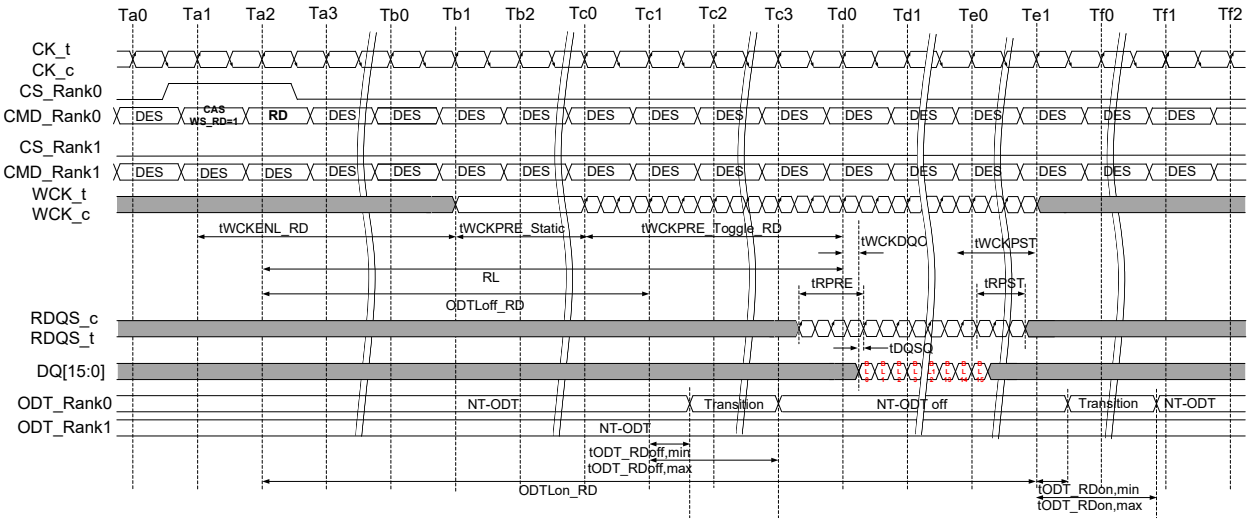

Figure 168 - ODT Control on Non-target DRAM for Read (MR0 OP[0]=0B)

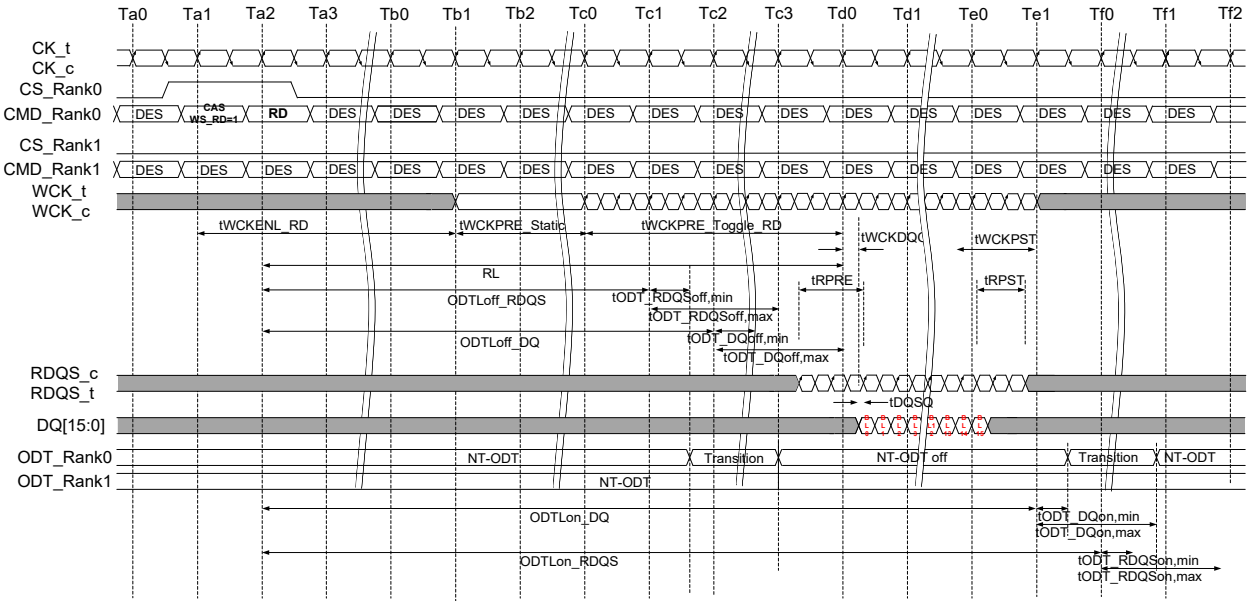

Figure 169 - ODT Control on Non-target DRAM for Read (MR0 OP[0]=1B)

7.6.5.5 Rank2Rank Timing diagram of Write to Read case

In Non-target DRAM ODT enabled mode, Write to Read command constraint in Rank2Rank operation MR0 OP[0] = 1_B(RDQS/DQ NT-ODT control Separated) is shorter than MR0 OP[0]=0_B(RDQS/DQ NT-ODT control merged). Refer to **Figure 170** and **Figure 171**.

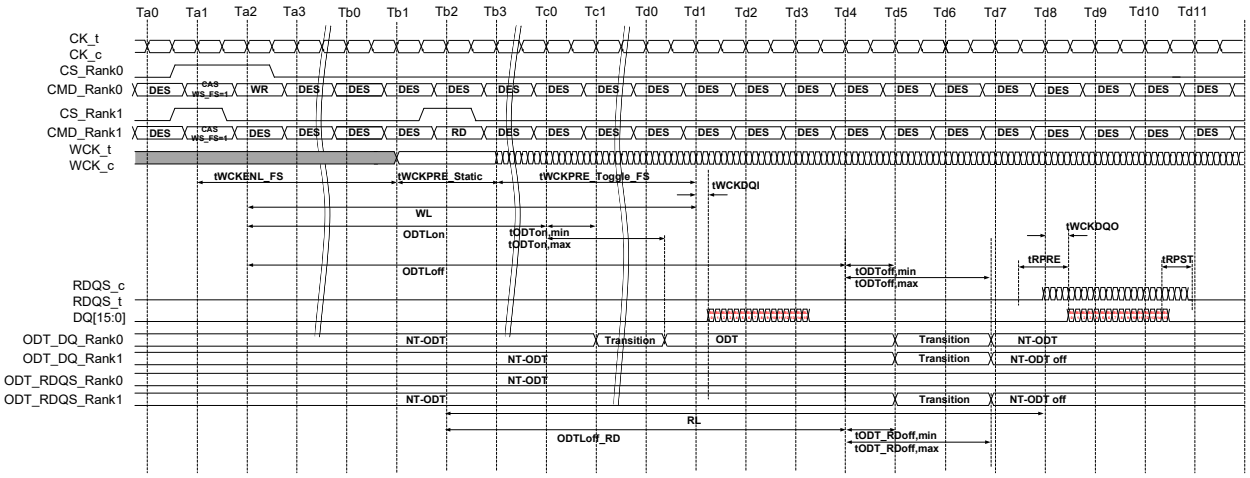

NOTE :
1) MR0 OP[0] = 0B (RDQS/DQ NT-ODT control are merged)
2) CKR = 4:1 mode, BL16
3) MR10 OP[5:4] = 01B (Static = 2*tWCK, Toggle = 2tWCK), MR10 OP[7:6] = 01B(2.5*tWCK)

Figure 170 - Write to Read Rank2Rank Operation (MR OP[0]=0_B)

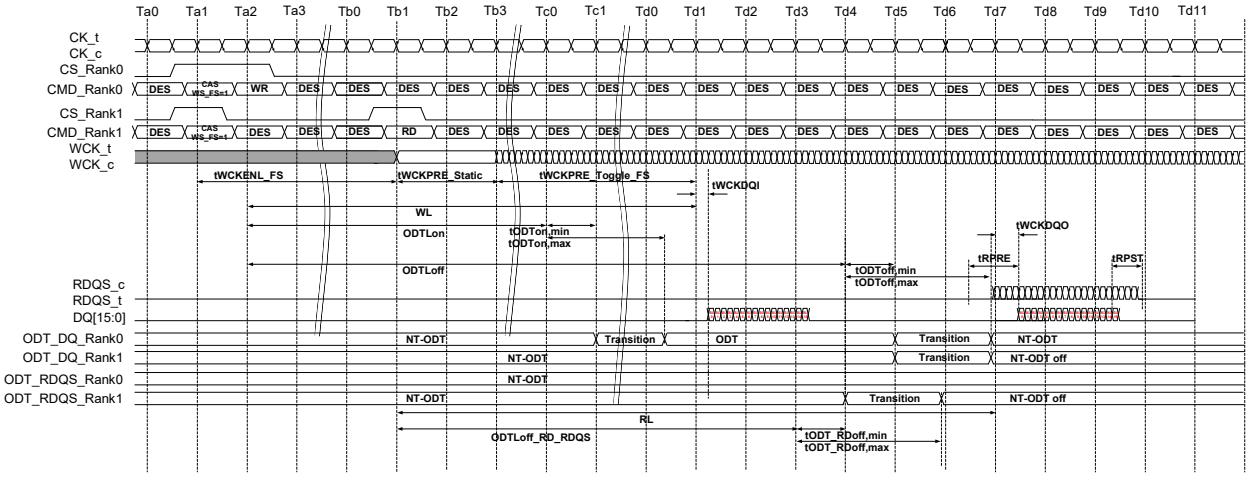

NOTE :
1) MR0 OP[0] = 1B (RDQS/DQ NT-ODT control are separated)
2) CKR = 4:1 mode, BL16
3) MR10 OP[5:4] = 01B (Static = 2*tWCK, Toggle = 2tWCK), MR10 OP[7:6] = 01B(2.5*tWCK)

Figure 171 - Write to Read Rank2Rank Operation (MR OP[0]=1_B)

7.6.6 NT-ODT behavior unification

LPDDR5 SDRAM supports the unified NT-ODT behavior as optional feature to reduce one bubble in the Write to Read operation in multi rank case when Write Link ECC is disabled and to simplify the handling of NT-ODT timing.
MR0 OP[5] indicates whether the unified NT-ODT behavior is supported or not.

- MR0 OP[5]=0_B
  The NT-ODT behavior does not follow the unified NT-ODT behavior.
  See vendor's data sheet for detail of NT-ODT behavior.
- MR0 OP[5]=1_B
  The NT-ODT behavior follow the unified NT-ODT behavior which defined in this section.

7.6.6.1 Unified NT-ODT behavior

Once NT-ODT is enabled, termination by NT-ODT for DQ, DMI and RDQS pins are continuing until NT-ODT is disabled or SDRAM will be reset, except following case.

- DQ
  - During the input receiver turned on (Write operation for example).
  - During the output driver turned on (Read operation for example).
- DMI
  - DMI is disabled by MR setting.
  - During the input receiver turned on.
  - During the output driver turned on.
- RDQS_t
  - RDQS_t is disabled by MR setting.
  - During the input receiver turned on.
  - During the output driver turned on.
- RDQS_c
  - RDQS_c is disabled by MR setting.
  - During the output driver turned on.

In Non-Target ODT (NT-ODT) mode, Target DRAM ODT and Non-Target DRAM ODT can be set by MR11 and MR41 and a possible combination is shown in **Table 256**. NT-ODT needs to be used with Target ODT. It means that a following MR combination is inhibited: DQ ODT: MR11 OP[2:0] =000_B and NT-ODT Enable: MR11 OP[3]=1_B. If using NT-ODT function, following things should be considered: V_{IH} specification of DQ is satisfied for Write operation. In Read operation, since SDRAM calibrates Pull-Up strength to satisfy V_{OH} specification according as SoC ODT of MR17 OP[2:0], SoC ODT of MR17 OP[2:0] should be the same as equivalent resistance of NT-ODT (MR41 OP[7:5]) and ODT of SoC Rx. Notice that the ODT value of non-target rank should be always one fixed level irrespective of read/write operation and NT-ODT should be disabled in case of VRO enabled by MR13 OP[2]. Refer to the table below for more information.
Following MR setting, SDRAMs connected to the same data bus line is required to have same setting.

- MR22 OP[5:4]: Write Link ECC
- MR22 OP[7:6]: Read Link ECC
- MR3 OP[7]: DBI-WR
- MR3 OP[6]: DBI RD
- MR13 OP[5]: DMD
- MR21 OP[5]: RDCFE
- MR20 OP[1:0]: RDQS
- MR46 OP[2]: WCK-DQS_t/Parity Training
- MR26 OP[7] Read/Write-based WCK-RDQS_t Training

Table 254 - Normal Mode vs. NT-ODT Mode for Write Operation

Mode MR11 OP[3]	Target Rank ODT	Non-Target Rank ODT	Equivalent ODT of 2-Rank DRAM
OP[3]=0 (Normal Mode)	MR11 OP[2:0] (ODT_T)	Disable	ODT_T
OP[3]=1 (NT-ODT Mode)	MR11 OP[2:0] (ODT_T)	MR41 OP[7:5] (ODT_{NT})	ODT_T || ODT_{NT}

Table 255 - Normal Mode vs. NT-ODT Mode for Read Operation

Mode MR11 OP[3]	Non-Target Rank ODT	SoC Rx ODT	Equivalent ODT for RD operation	MR17 OP[2:0] (SoC ODT for DRAM Pull-Up Cal.)
OP[3]=0 (Normal Mode)	Disable	ODT_{SOC}	ODT_{SOC}	ODT_{SOC}
OP[3]=1 (NT-ODT Mode)	MR41 OP[7:5] (ODT_{NT})	ODT_{SOC}	ODT_{NT} || ODT_{SOC}	ODT_{NT} || ODT_{SOC}[1]

NOTE 1 Since SoC ODT of MR17 can only support RZQ/n (n=1,2,3,4,5,6), (ODTNT||ODTSOC) should be one of RZQ/1, RZQ/2, RZQ/3, RZQ/4, RZQ/5, and RZQ/6.

Table 256 shows all combinations that equivalent ODT is RZQ/1, RZQ/2, RZQ/3, RZQ/4, RZQ/5, or RZQ/6.

Table 256 - Combination of Target ODT, Non-target ODT and SoC ODT

ODT_{NT}	ODT_T	ODT_{SoC}	Write (ODT_{eq}=ODT_{NT} // ODT_T)	Read (SoC ODT MR17 OP[2:0])
RZQ/1	RZQ/1	RZQ/0	RZQ/2	RZQ/1
	RZQ/2	RZQ/1	RZQ/3	RZQ/2
	RZQ/3	RZQ/2	RZQ/4	RZQ/3
	RZQ/4	RZQ/3	RZQ/5	RZQ/4
	RZQ/5	RZQ/4	RZQ/6	RZQ/5
	-	RZQ/5	-	RZQ/6
RZQ/2	RZQ/1	RZQ/0	RZQ/3	RZQ/2
	RZQ/2	RZQ/1	RZQ/4	RZQ/3
	RZQ/3	RZQ/2	RZQ/5	RZQ/4
	RZQ/4	RZQ/3	RZQ/6	RZQ/5
	-	RZQ/4	-	RZQ/6
RZQ/3	RZQ/1	RZQ/0	RZQ/4	RZQ/3
	RZQ/2	RZQ/1	RZQ/5	RZQ/4
	RZQ/3	RZQ/2	RZQ/6	RZQ/5
	-	RZQ/3	-	RZQ/6
RZQ/4	RZQ/1	RZQ/0	RZQ/5	RZQ/4
	RZQ/2	RZQ/1	RZQ/6	RZQ/5
	-	RZQ/2	-	RZQ/6
RZQ/5	RZQ/1	RZQ/0	RZQ/6	RZQ/5
	-	RZQ/1	-	RZQ/6
RZQ/6	RZQ/0	RZQ/0	RZQ/6	RZQ/6

7.6.6.2 Effective MR set for NT ODT

The following MR setting affect NT-ODT behavior.

- The NT-ODT does not apply to DMI if all of the following function is disabled.
  - MR3 OP[6]: DBI-Read select
  - MR3 OP[7]: DBI-Write select
  - MR13 OP[5]: Data Mask Disable
  - MR21 OP[5]: READ Data Copy Function Enable
  - MR22 OP[7:6]: Read link ECC Control

Table 257 - NT ODT behavior of DMI by MR setting

Function					NT ODT to DMI
MR3 OP[6] DBI-Read	MR3 OP[7] DBI-Write	MR13 OP[5] Data Mask	MR21 OP[5] READ Data Copy	MR22 OP[7:6] Read Link ECC	
0_B (Disable)	0_B (Disable)	1_B (Disable)	0_B (Disable)	00_B (Disable)	NT ODT is not applied.
Other than those above					NT ODT is applied.

NOTE 1 The following MR setting is inhibited when MR46 OP[2] =1_B.
DBI-Read: MR3 OP[6]=0_B, DBI-Write: MR3 OP[7]=0_B, Data Mask: MR13 OP[5]=1_B, READ Data Copy: MR21 OP[5]=0_B, Read Link ECC: MR22 OP[7:6]=00_B

- The NT-ODT does not apply to RDQS_t if all of the following function is disabled.
  - MR20 OP[1:0]: Read DQS
  - MR22 OP[5:4]: Write link ECC Control
  - MR46 OP[2]: WCK-RDQS_t/Parity Training

Table 258 - NT ODT behavior of RDQS_t by MR setting

MR46 OP[2] WCK-RDQS_t/Parity Training	MR26 OP[7] Read/Write-based WCK-RDQS_t Training	MR20 OP[1:0] Read DQS	MR22 OP[5:4] Write Link ECC	NT ODT to RDQS_t
0_B (Disable)	0_B (Disable)	00_B or 11_B (Disable)	00_B (Disable)	NT ODT is not applied
0_B (Disable)	0_B (Disable)	00_B or 11_B (Disable)	01_B (Enable)	NT ODT is applied
0_B (Disable)	0_B (Disable)	01_B or 10_B (Enable)	00_B (Disable)	NT ODT is applied
0_B (Disable)	0_B (Disable)	01_B or 10_B (Enable)	01_B (Enable)	NT ODT is applied
0_B (Disable)	1_B (Enable)	00_B or 11_B (Disable)	00_B (Disable)	NT ODT is applied
0_B (Disable)	1_B (Enable)	00_B or 11_B (Disable)	01_B (Enable)	NT ODT is applied
0_B (Disable)	1_B (Enable)	01_B or 10_B (Enable)	00_B (Disable)	NT ODT is applied
0_B (Disable)	1_B (Enable)	01_B or 10_B (Enable)	01_B (Enable)	NT ODT is applied
1_B (Enable)	0_B (Disable)	00_B or 11_B (Disable)	00_B (Disable)	Prohibited setting
1_B (Enable)	0_B (Disable)	00_B or 11_B (Disable)	01_B (Enable)	NT ODT is applied
1_B (Enable)	0_B (Disable)	01_B or 10_B (Enable)	00_B (Disable)	Prohibited setting
1_B (Enable)	0_B (Disable)	01_B or 10_B (Enable)	01_B (Enable)	NT ODT is applied
1_B (Enable)	1_B (Enable)	00_B or 11_B (Disable)	00_B (Disable)	Prohibited setting
1_B (Enable)	1_B (Enable)	00_B or 11_B (Disable)	01_B (Enable)	Prohibited setting
1_B (Enable)	1_B (Enable)	01_B or 10_B (Enable)	00_B (Disable)	Prohibited setting
1_B (Enable)	1_B (Enable)	01_B or 10_B (Enable)	01_B (Enable)	Prohibited setting

- The NT-ODT does not apply to RDQS_c if Read DQS function for RDQS_c is disabled.
  - MR20 OP[1:0]: Read DQS

Table 259 - NT ODT behavior of RDQS_c by MR setting

Function	NT ODT to RDQS_c
MR20 OP[1:0] Read DQS	
00_B (Disable)	NT ODT is not applied.
01_B (Disable)	NT ODT is not applied.
Other than those above	NT ODT is applied.

7.6.6.3 Asynchronous NT-ODT

The NT-ODT is enabled by MR11 OP[3] and a target ODT of SDRAM is controlled by Write related command such as Write, Mask Write command or Read related command such as Read and MRR command. The ODT of each SDRAM is turned on with NT-ODT value (MR41 OP[2:0]). When Write, Mask Write or Read command is issued to the target DRAM, according to timing parameters like ODTLon_(RD_DQ/RDQS), tODT_RDon, ODTLoff_(RD_DQ/RDQS) or tODT_RDoff, the ODT of the target DRAM is controlled.

Following timing parameters apply when DRAM NT-ODT mode is enabled.

- ODTLon, tODTon,min, tODTon,max
- ODTLoff, tODToff,min, tODToff,max
- ODTLon_RD_DQ/ODTLon_RD_RDQS, tODT_RDon,min, tODT_RDon,max
- ODTLoff_RD_DQ/ ODTLoff_RD_RDQS, tODT_RDoff,min, tODT_RDoff,max

7.6.6.3.1 NT-ODT behavior for Write operation

ODTLon is a synchronous parameter and it is the latency from the Write related command such as Write or Mask Write command (the rising edge of the clock) to tODTon reference. ODTLon latency is a fixed latency value for each operation frequency range. Each operation frequency range has a different ODTLon latency. Minimum RTT turn-on time (tODTon,min) is the point in time when the device termination circuit leaves high impedance state and NT-ODT resistance begins to turn on. Maximum RTT turn-on time (tODTon,max) is the point in time when the ODT resistance is fully on. tODTon,min and tODTon,max are measured once ODTLon latency is satisfied from the Write or Mask Write command.

ODTLoff is a synchronous parameter and it is the latency from the Write or Mask Write command (the rising edge of the clock) to tODToff reference. ODTLoff latency is a fixed latency value for each operation frequency range. Each operation frequency range has a different ODTLoff latency. Minimum RTT turn-off time (tODToff,min) is the point in time when the device termination circuit starts to turn off the NT-ODT resistance. Maximum NT-ODT turn-off time (tODToff,max) is the point in time when the on-die termination has reached high impedance. tODToff,min and tODToff,max are measured once ODTLoff latency is satisfied from the Write or Mask Write command.

In Non-target DRAM ODT enabled mode, ODT timings (ODTLon and ODTLoff) are referenced to the Write command and the ODT value in target rank can be updated within tODTLon,max as shown in **Figure 172**. After write operation, target ODT value should be recovered to pre-defined Non-target DRAM ODT value within the tODToff,max.

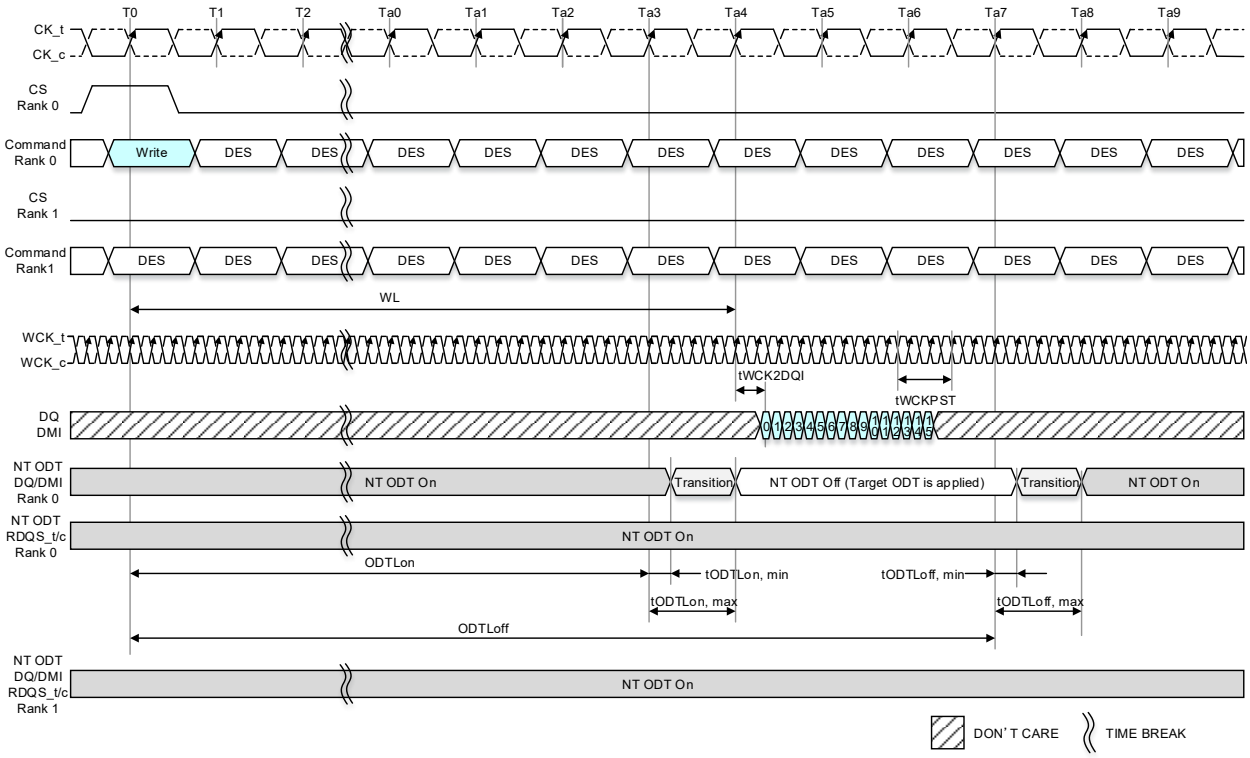

NOTE 1 tWCK2CK is 0ps in this instance.
NOTE 2 ODTLon=WL-1, ODTLoff=WL+3
NOTE 3 In case of NT-ODT is applied for DMI.
NOTE 4 Write Link ECC is disabled.

Figure 172 - ODT, NT ODT Timing for Write BG Mode: CKR (WCK vs. CK) = 4:1, BL=16

Table 260 - ODTLon and ODTLoff Latency Values for Write

Data Rate	WCK:CK Ratio	Lower Clock Frequency Limit (>) (MHz)	Upper Clock Frequency Limit (≤) (MHz)	ODTLon Units=nCK	ODTLoff (WL + BL/n_min + RU(tWCK2DQI(max)/tCK)) Units=nCK				
				ALL mode	16B mode		8B mode	BG mode	
					BL16	BL32	BL32	BL16	BL32
533	2:1	10	133	WL - 1	WL + 5	WL + 9	WL + 9	-	-
1067	2:1	133	267	WL - 2	WL + 5	WL + 9	WL + 9	-	-
1600	2:1	267	400	WL - 2	WL + 5	WL + 9	WL + 9	-	-
2133	2:1	400	533	WL - 3	WL + 5	WL + 9	WL + 9	-	-
2750	2:1	533	688	WL - 3	WL + 5	WL + 9	WL + 9	-	-
3200	2:1	688	800	WL - 4	WL + 5	WL + 9	WL + 9	-	-
533	4:1	5	67	WL - 1	WL + 3	WL + 5	WL + 5	-	-
1067	4:1	67	133	WL - 1	WL + 3	WL + 5	WL + 5	-	-
1600	4:1	133	200	WL - 1	WL + 3	WL + 5	WL + 5	-	-
2133	4:1	200	267	WL - 2	WL + 3	WL + 5	WL + 5	-	-
2750	4:1	267	344	WL - 2	WL + 3	WL + 5	WL + 5	-	-
3200	4:1	344	400	WL - 2	WL + 3	WL + 5	WL + 5	-	-
3733	4:1	400	467	WL - 2	-	-	WL + 5	WL + 3	WL + 7
4267	4:1	467	533	WL - 3	-	-	WL + 5	WL + 3	WL + 7
4800	4:1	533	600	WL - 3	-	-	WL + 5	WL + 3	WL + 7
5500	4:1	600	688	WL - 3	-	-	WL + 5	WL + 3	WL + 7
6000	4:1	688	750	WL - 3	-	-	WL + 5	WL + 3	WL + 7
6400	4:1	750	800	WL - 3	-	-	WL + 5	WL + 3	WL + 7

NOTE 1 ODTLoff is not related to WCK post-amble because the ODT of WCK is always turned on or off.

Table 261 - Asynchronous NT-ODT Turn on and Turn off Timing for Write

Parameter	ALL Operation Frequency	Unit
tODTon,min	1.5	ns
tODTon,max	3.5	ns
tODToff,min	1.5	ns
tODToff,max	3.5	ns

7.6.6.3.2 NT-ODT behavior for Read operation

LPDDR5 SDRAM only supports “Separate DQ NT-ODT timing from RDQS NT-ODT timing” at Read related command such as Read and MRR and this information is described MR0 OP[0]: NT-ODT timing mode.

MR0 OP[0]=1_B: Separate DQ NT-ODT timing from RDQS NT-ODT timing

ODTLoff_RD_DQ/RDQS is a synchronous parameter and it is the latency from the Read command(the rising edge of the clock) to tODT_RDoff reference. ODTLoff_RD_DQ/RDQS latency is a fixed latency value for each operation frequency range. Each operation frequency range has a different ODTLoff_RD_DQ/RDQS latency. Minimum RTT turn-off time (tODT_RDoff,min for example) is the point in time when the device termination circuit starts to turn off the NT-ODT resistance. Maximum NT-ODT turn-off time (tODT_RDoff,max) is the point in time when the on-die termination has reached high impedance. tODT_RDoff,min and tODT_RDoff,max are measured once ODTLoff latency is satisfied from the Read command.

ODTLoff_RD_DQ/RDQS is a synchronous parameter and it is the latency from the Read command (the rising edge of the clock) to tODT_RDon reference. ODTLoff_RD_DQ/RDQS latency is a fixed latency value for each operation frequency range. Each operation frequency range has a different ODTLoff_RD_DQ/RDQS latency. Minimum RTT turn-on time (tODT_RDon,min) is the point in time when the device termination circuit leaves high impedance state and NT-ODT resistance begins to turn on. Maximum RTT turn-on time (tODT_RDon,max) is the point in time when the ODT resistance is fully on. tODT_RDon,min and tODT_RDon,max are measured once ODTLoff_RD_DQ/RDQS latency is satisfied from the Read command.

In Non-target DRAM ODT enabled mode, ODT timings (ODTLoff_RD_DQ/RDQS and ODTLon_RD_DQ/RDQS) are referenced to Read command and the ODT value in target rank is disabled within tODT_RDoff,max as shown in **Figure 173**. After read operation, disabled ODT should be recovered to pre-defined Non-target DRAM ODT value within the tODT_RDon,max.

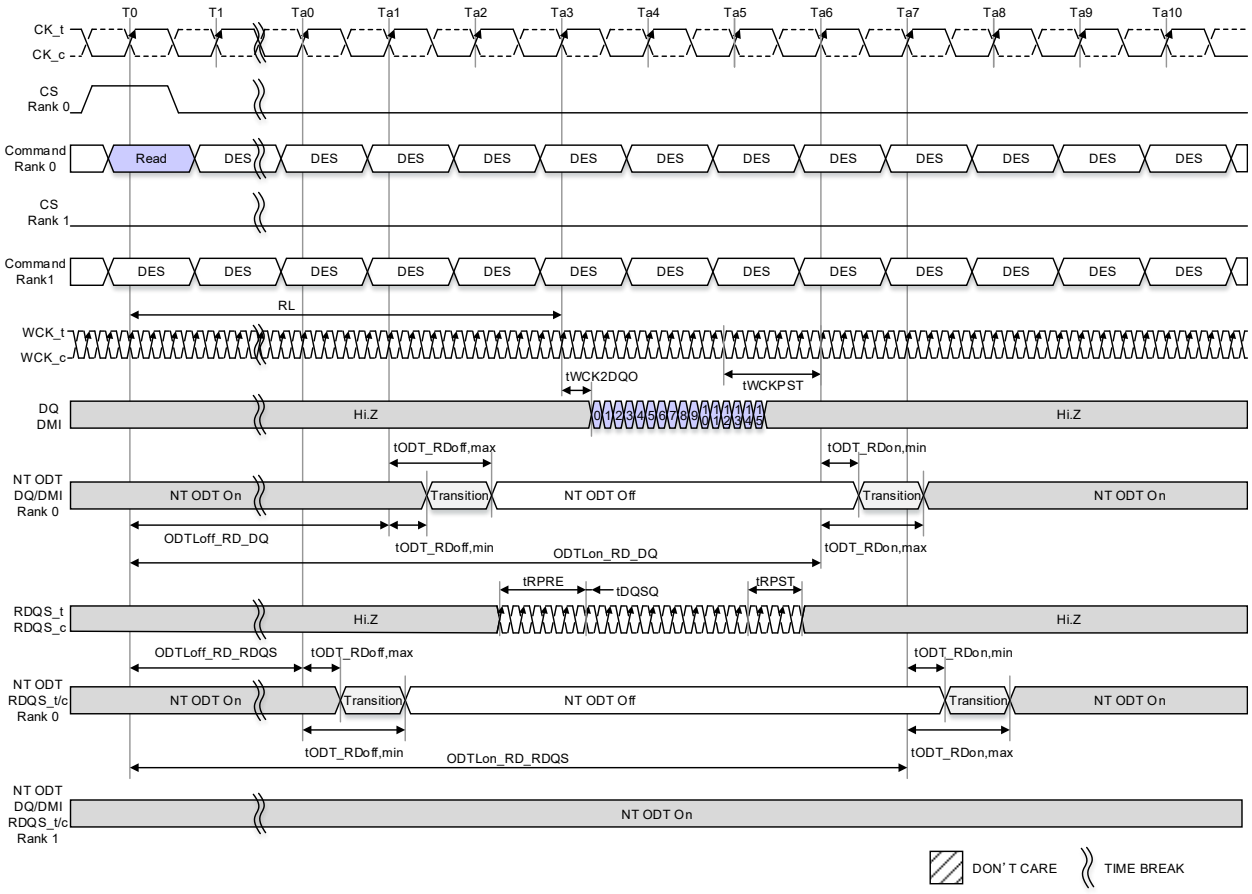

NOTE 1 tWCK2CK is 0ps in this instance.
NOTE 2 ODT/NT-ODT turned on/off timing for DQ and RDQS is separated.

Figure 173 - ODT Control on Non-target DRAM for Read (MR0 OP[0]=1$_B$)

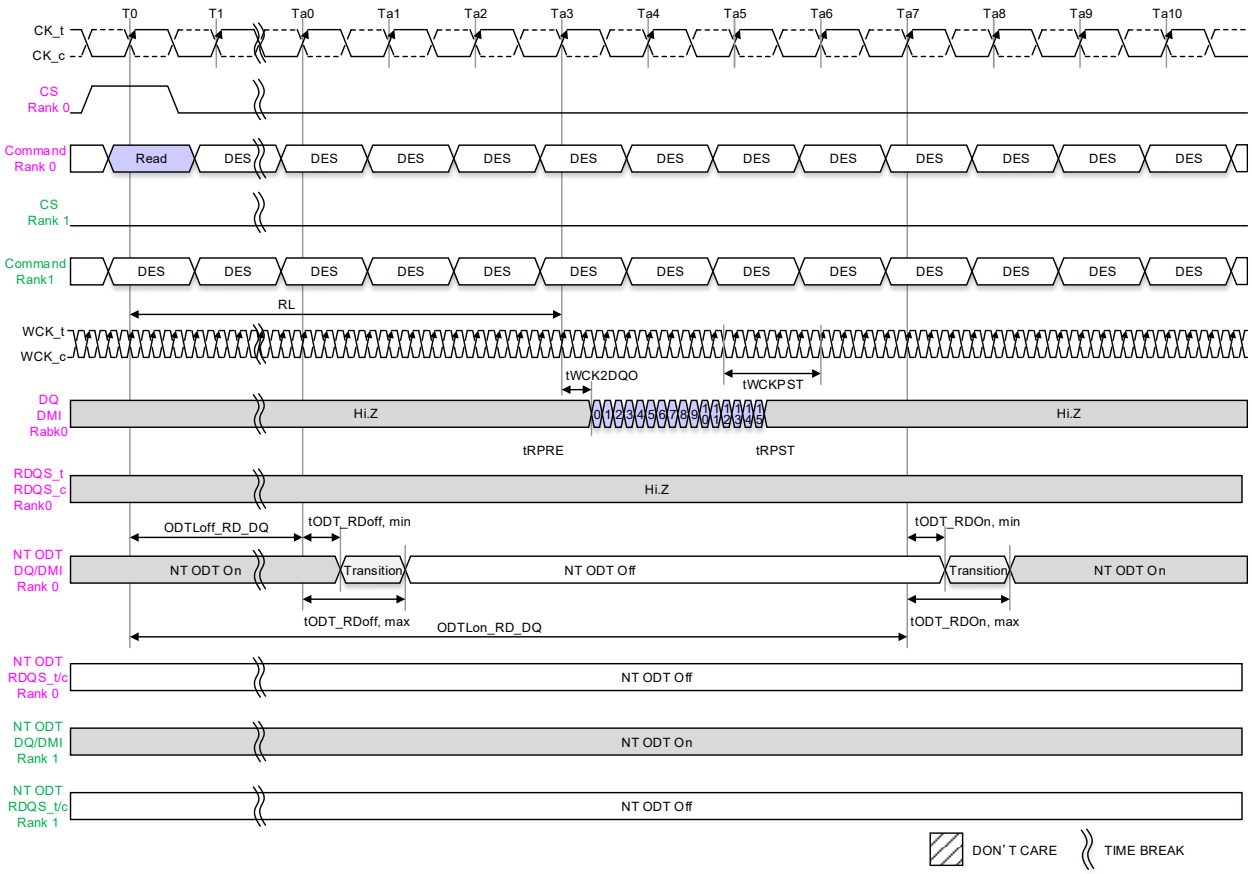

NOTE 1 tWCK2CK is 0ps in this instance.

Figure 174 - ODT, NT ODT Timing for Read BG Mode: CKR (WCK vs. CK) = 4:1, BL=16 RDQS = Disabled, MR0 OP[0]=1B

Table 262 - ODTLon_RD_DQ and ODTLoff_RD_DQ Latency Values for Read (MR0 OP[0]=1B)

Data Rate	WCK:CK Ratio	Lower Clock Frequency Limit (>) (MHz)	Upper Clock Frequency Limit (≤) (MHz)	ODTLoff_RD_DQ Units=nCK	ODTLon_RD_DQ (RL + BL/n_min + RU(tWCK2DQO(max)/tCK)) Units=nCK				
				ALL mode	16B mode		8B mode	BG mode	
					BL16	BL32	BL32	BL16	BL32
533	2:1	10	133	RL - 1	RL + 5	RL + 9	RL + 9	-	-
1067	2:1	133	267	RL - 2	RL + 5	RL + 9	RL + 9	-	-
1600	2:1	267	400	RL - 2	RL + 5	RL + 9	RL + 9	-	-
2133	2:1	400	533	RL - 3	RL + 6	RL + 10	RL + 10	-	-
2750	2:1	533	688	RL - 3	RL + 6	RL + 10	RL + 10	-	-
3200	2:1	688	800	RL - 4	RL + 6	RL + 10	RL + 10	-	-
533	4:1	5	67	RL - 1	RL + 3	RL + 5	RL + 5	-	-
1067	4:1	67	133	RL - 1	RL + 3	RL + 5	RL + 5	-	-
1600	4:1	133	200	RL - 1	RL + 3	RL + 5	RL + 5	-	-
2133	4:1	200	267	RL - 2	RL + 3	RL + 5	RL + 5	-	-
2750	4:1	267	344	RL - 2	RL + 3	RL + 5	RL + 5	-	-
3200	4:1	344	400	RL - 2	RL + 3	RL + 5	RL + 5	-	-
3733	4:1	400	467	RL - 2	-	-	RL + 5	RL + 3	RL + 7
4267	4:1	467	533	RL - 3	-	-	RL + 6	RL + 4	RL + 8
4800	4:1	533	600	RL - 3	-	-	RL + 6	RL + 4	RL + 8
5500	4:1	600	688	RL - 3	-	-	RL + 6	RL + 4	RL + 8
6000	4:1	688	750	RL - 3	-	-	RL + 6	RL + 4	RL + 8
6400	4:1	750	800	RL - 3	-	-	RL + 6	RL + 4	RL + 8

Table 263 - ODTLon_RD_RDQS and ODTLoff_RD_RDQS Latency Values for Read with RDQS enabled & MR10 OP[5:4]=00_B, 01_B, 10_B (MR0 OP[0]=1_B)

Data Rate	WCK:CK Ratio	Lower Clock Frequency Limit (>) (MHz)	Upper Clock Frequency Limit (≤) (MHz)	ODTLoff_RD_RDQS Units=nCK	ODTLon_RD_RDQS (RL + BL/n_min + RU(tWCK2DQO(max)/tCK) + 2) Units=nCK at CKR=2:1 ODTLon_RD_RDQS (RL + BL/n_min + RU(tWCK2DQO(max)/tCK) + 1) Units=nCK at CKR=4:1				
				ALL mode	16B mode		8B mode	BG mode	
					BL16	BL32	BL32	BL16	BL32
533	2:1	10	133	RL - 3	RL + 7	RL + 11	RL + 11	-	-
1067	2:1	133	267	RL - 4	RL + 7	RL + 11	RL + 11	-	-
1600	2:1	267	400	RL - 4	RL + 7	RL + 11	RL + 11	-	-
2133	2:1	400	533	RL - 5	RL + 8	RL + 12	RL + 12	-	-
2750	2:1	533	688	RL - 5	RL + 8	RL + 12	RL + 12	-	-
3200	2:1	688	800	RL - 6	RL + 8	RL + 12	RL + 12	-	-
533	4:1	5	67	RL - 2	RL + 4	RL + 6	RL + 6	-	-
1067	4:1	67	133	RL - 2	RL + 4	RL + 6	RL + 6	-	-
1600	4:1	133	200	RL - 2	RL + 4	RL + 6	RL + 6	-	-
2133	4:1	200	267	RL - 3	RL + 4	RL + 6	RL + 6	-	-
2750	4:1	267	344	RL - 3	RL + 4	RL + 6	RL + 6	-	-
3200	4:1	344	400	RL - 3	RL + 4	RL + 6	RL + 6	-	-
3733	4:1	400	467	RL - 3	-	-	RL + 6	RL + 4	RL + 8
4267	4:1	467	533	RL - 4	-	-	RL + 7	RL + 5	RL + 9
4800	4:1	533	600	RL - 4	-	-	RL + 7	RL + 5	RL + 9
5500	4:1	600	688	RL - 4	-	-	RL + 7	RL + 5	RL + 9
6000	4:1	688	750	RL - 4	-	-	RL + 7	RL + 5	RL + 9
6400	4:1	750	800	RL - 4	-	-	RL + 7	RL + 5	RL + 9

Table 264 - ODTLon_RD_RDQS and ODTLoff_RD_RDQS Latency Values for Read with RDQS enabled & MR10 OP[5:4]=11B (MR0 OP[0]=1B)

Data Rate	WCK:CK Ratio	Lower Clock Frequency Limit (>) (MHz)	Upper Clock Frequency Limit (≤) (MHz)	ODTLoff_RD_RDQS Units=nCK	ODTLon_RD_RDQS (RL + BL/n_min + RU(tWCK2DQO(max)/tCK) + 1) Units=nCK, at CKR=4:1				
				ALL mode	16B mode		8B mode	BG mode	
					BL16	BL32	BL32	BL16	BL32
3733	4:1	400	467	RL - 4	-	-	RL + 6	RL + 4	RL + 8
4267	4:1	467	533	RL - 5	-	-	RL + 7	RL + 5	RL + 9
4800	4:1	533	600	RL - 5	-	-	RL + 7	RL + 5	RL + 9
5500	4:1	600	688	RL - 5	-	-	RL + 7	RL + 5	RL + 9
6000	4:1	688	750	RL - 5	-	-	RL + 7	RL + 5	RL + 9
6400	4:1	750	800	RL - 5	-	-	RL + 7	RL + 5	RL + 9

Table 265 - Asynchronous NT-ODT Turn On and Turn Off Timing

Parameter	ALL Operation Frequency	Unit
tODT_RDon,min	1.5	ns
tODT_RDon,max	3.5	ns
tODT_RDoff,min	1.5	ns
tODT_RDoff,max	3.5	ns

7.6.6.3.3 Timing diagrams for typical case

Timing diagrams for typical case are shown in below.

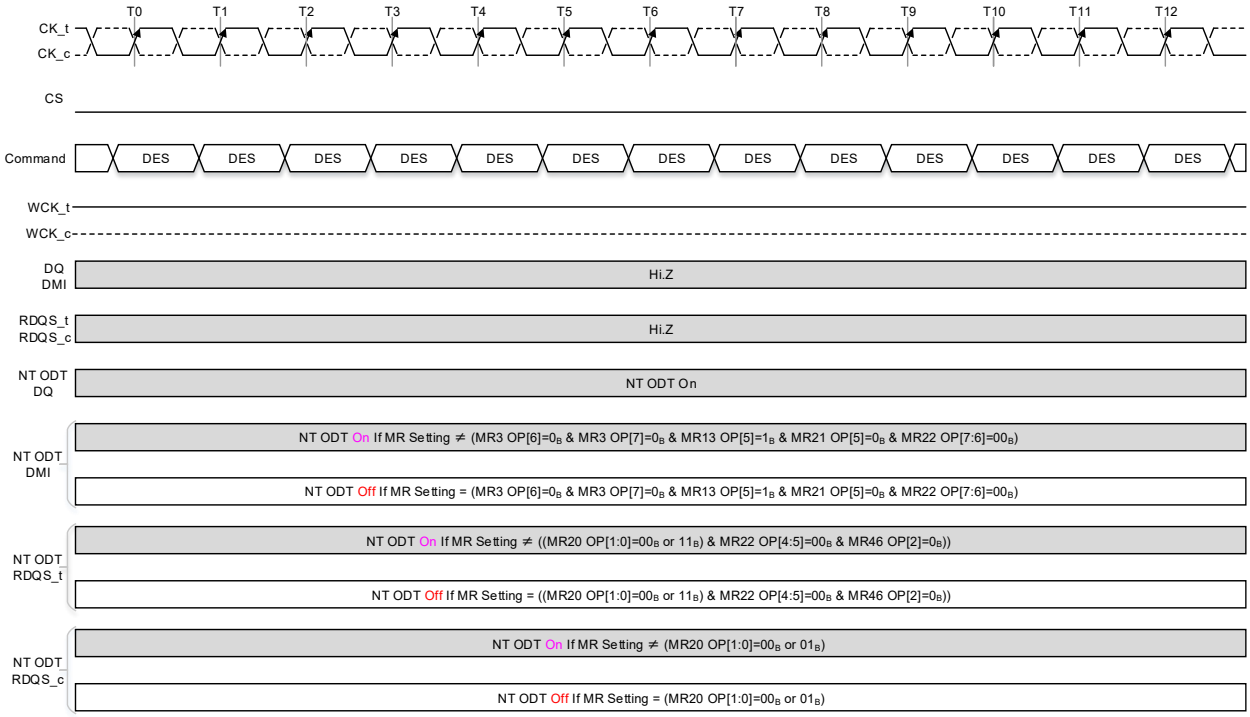

Figure 175 - NT ODT State at Idle

NT-ODT behavior in Write X operation is shown in below.

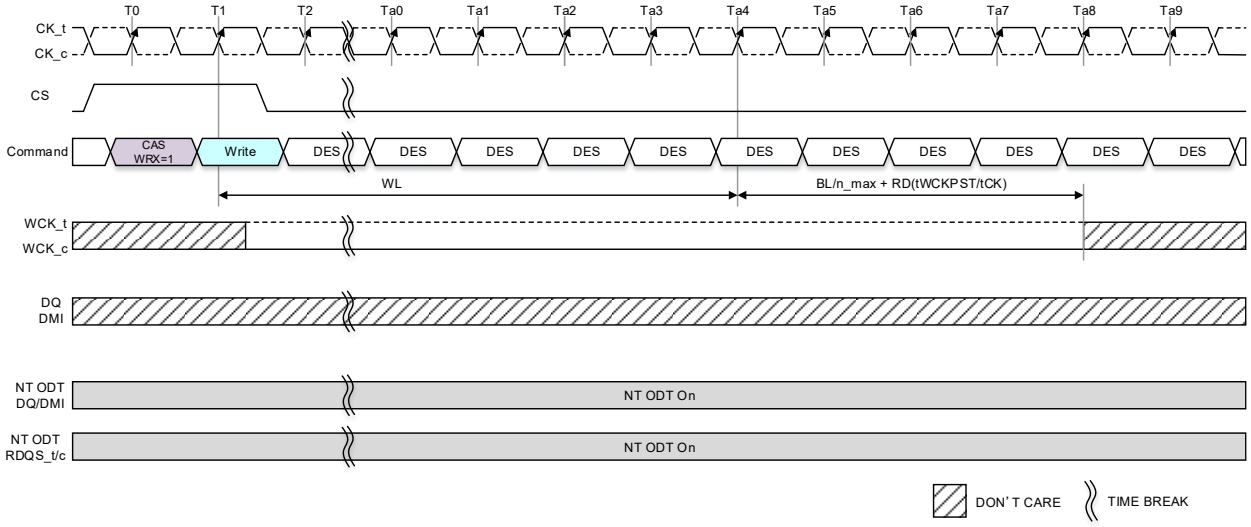

NOTE 1 NT ODT is Enabled.

Figure 176 - NT ODT Timing at Write X for Write BG Mode: CKR (WCK vs. CK) = 4:1, BL=16

NT-ODT behavior in Write with Link ECC operation is shown in below.

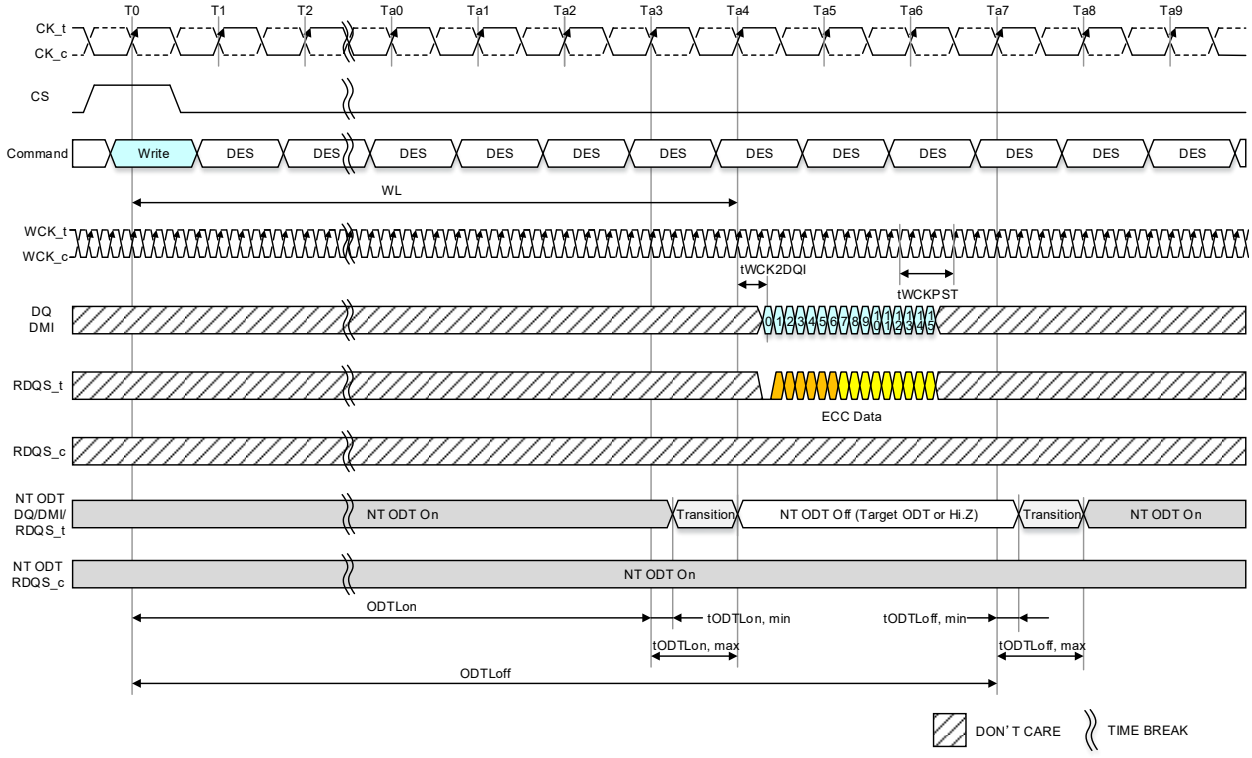

NOTE 1 tWCK2CK is 0ps in this instance.
NOTE 2 ODTLon=WL-1, ODTLoff=WL+3
NOTE 3 In case of NT-ODT is applied for DMI.
NOTE 4 Write Link ECC is enabled.

Figure 177 - ODT, NT ODT Timing for Write w/ Link ECC BG Mode: CKR (WCK vs. CK) = 4:1, BL=16

NT-ODT behavior in Write with Write X and Link ECC operation is shown in below.

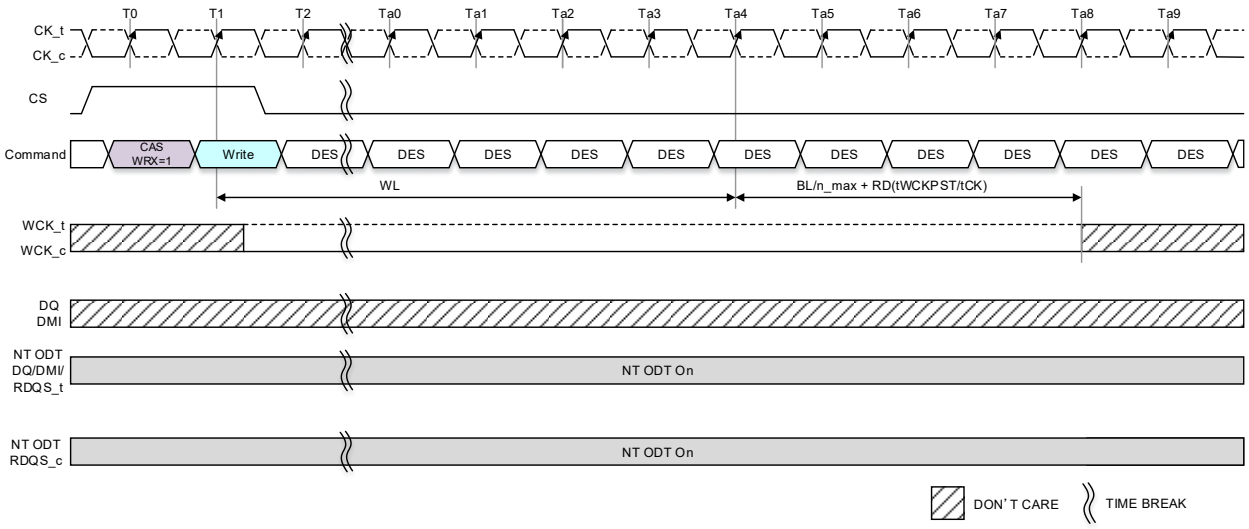

Figure 178 - NT ODT Timing at Write X with Write Link ECC for Write BG Mode: CKR (WCK vs. CK) = 4:1, BL=16

7.6.6.3.4 Rank to Rank Write to Read timing

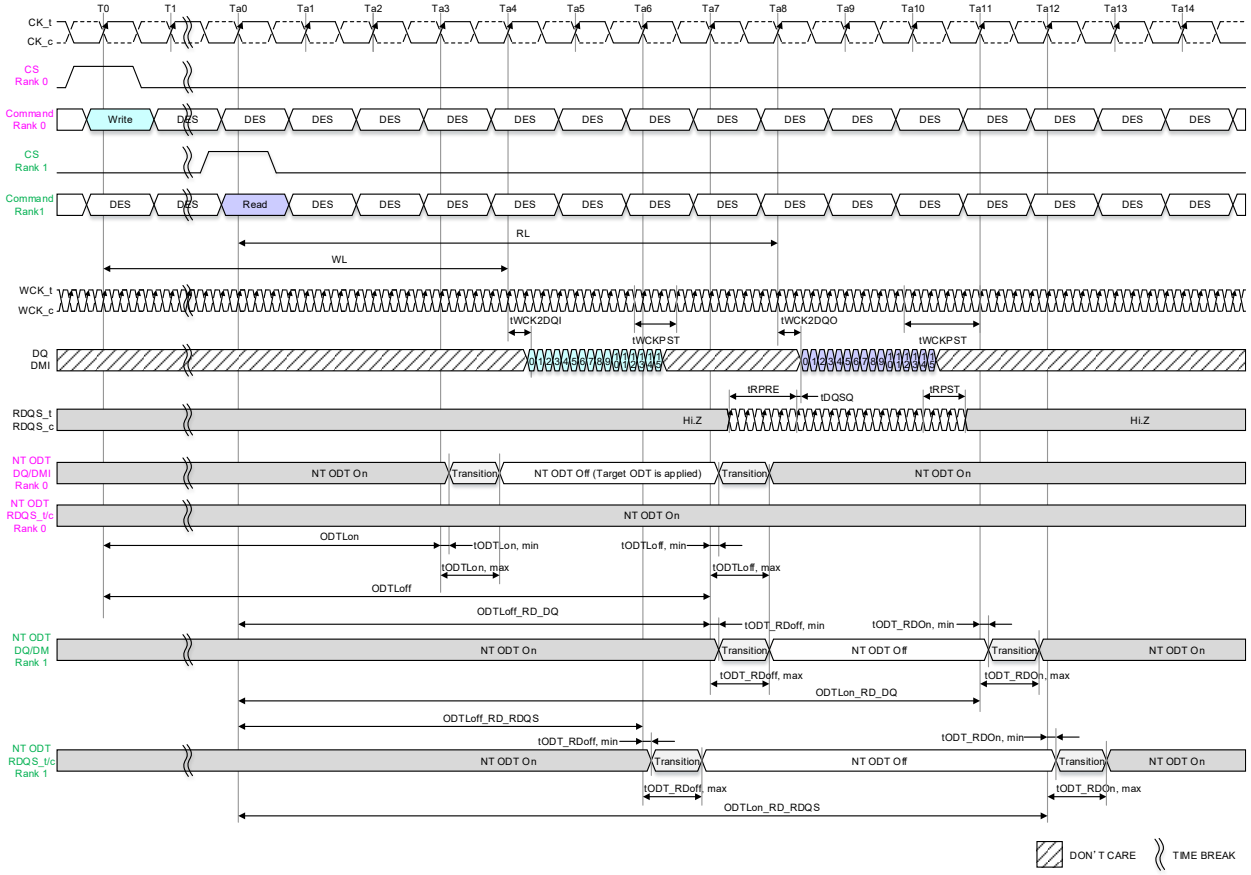

NOTE 1 tWCK2CK is 0ps in this instance.
NOTE 2 ODTLon=WL-1, ODTLoff=WL+3
NOTE 3 In case of NT-ODT is applied for DMI.
NOTE 4 Write Link ECC is disabled.
NOTE 5 ODTLoff_RD_DQ=RL-1, ODTLon_RD_DQ=RL+3
NOTE 6 ODTLoff_RD_RDQS=RL-2, ODTLon_RD_RDQS=RL+4
NOTE 7 ODT/NT-ODT turned on/off timing for DQ and RDQS is separated.

Figure 179 - Write to Read Rank2Rank Operation (MR0 OP[0]=1_B)

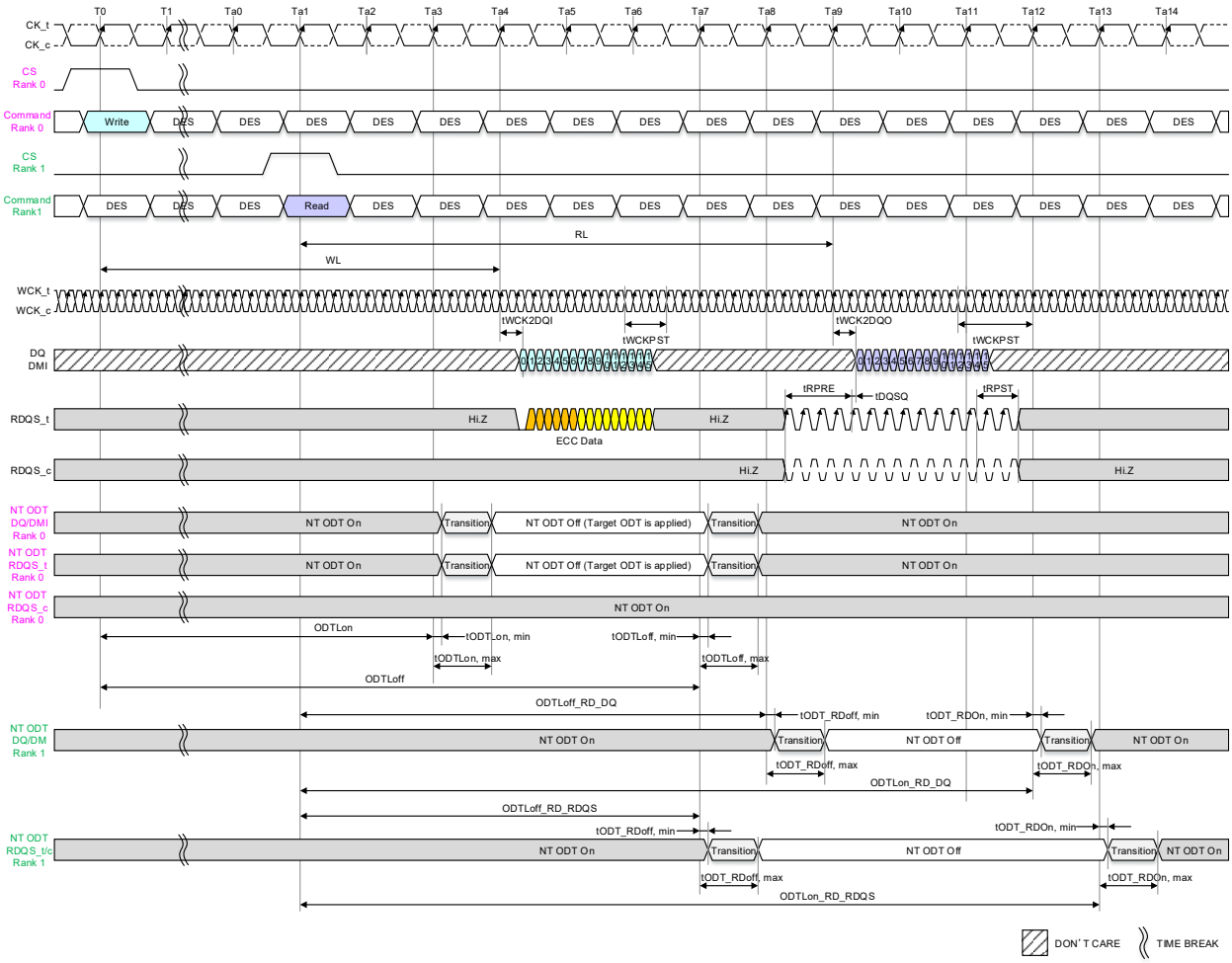

NOTE 1 tWCK2CK is 0ps in this instance.
NOTE 2 ODTLon=WL-1, ODTLoff=WL+3
NOTE 3 In case of NT-ODT is applied for DMI.
NOTE 4 Write Link ECC is enabled.
NOTE 5 ODTLoff_RD_DQ=RL-1, ODTLon_RD_DQ=RL+3
NOTE 6 ODTLoff_RD_RDQS=RL-2, ODTLon_RD_RDQS=RL+4
NOTE 7 ODT/NT-ODT turned on/off timing for DQ and RDQS is separated.

Figure 180 - Write to Read Rank2Rank Operation w/ Link ECC (MR0 OP[0]=1_B)

7.6.7 Input Clock Stop and Frequency Change

LPDDR5 SDRAM supports input clock frequency change under the following conditions:

- tCK(abs)min is met for each clock cycle.
- Refresh requirements apply during clock frequency change.
- All banks are required to be idle state or during tRFC.
- The certain timing conditions such as tRCD, tWR, tWRA, tMRW, tMRR have been met prior to changing the frequency.
- CS shall be held LOW during clock frequency change.
- The LPDDR5 SDRAM is ready for normal operation after the clock satisfies tCH(abs) and tCL(abs) for a minimum of TBD.

After the input clock frequency is changed, additional MRW commands may be required to set the WR, RL, etc. These settings may need to be adjusted to meet minimum timing requirements at the target clock frequency.

LPDDR5 SDRAM supports clock stop under the following conditions:

- CK_t is held LOW and CK_c is held HIGH during clock stop.
- CS shall be held LOW during clock stop.
- Refresh requirements apply during clock stop.
- All banks are required to be idle state or during tRFC.
- The certain timing conditions such as tRCD, tWR, tRP, tMRW, tMRR, tZQLAT, etc. have been met prior to stopping the clock.
- Read with auto precharge and write with auto precharge commands need extra TBD clock cycles in addition to the related timing constraints, nWR and nRTP, to complete the operations.

7.6.6 Input Clock Stop and Frequency Change (Cont'd)

- REFab, REFpb, SRE, SRX and ZQcal Start commands are required to have TBD additional clocks prior to stopping the clock.
- The LPDDR5 SDRAM is ready for normal operation after the clock is restarted and satisfies tCH(abs) and tCL(abs) for a minimum of TBD.

7.6.8 V_{REF} Current Generator (VRCG)

LPDDR5 SDRAM VREF current generators (VRCG) incorporate a high current mode to reduce the settling time of the internal V_{REF}(DQ) and V_{REF}(CA) levels during training and when changing frequency set points during operation. The high current mode is enabled by setting MR16 OP[6] = 1. Only Deselect commands may be issued until tVRCG_ENABLE is satisfied. tVRCG_ENABLE timing is shown in Figure 181.

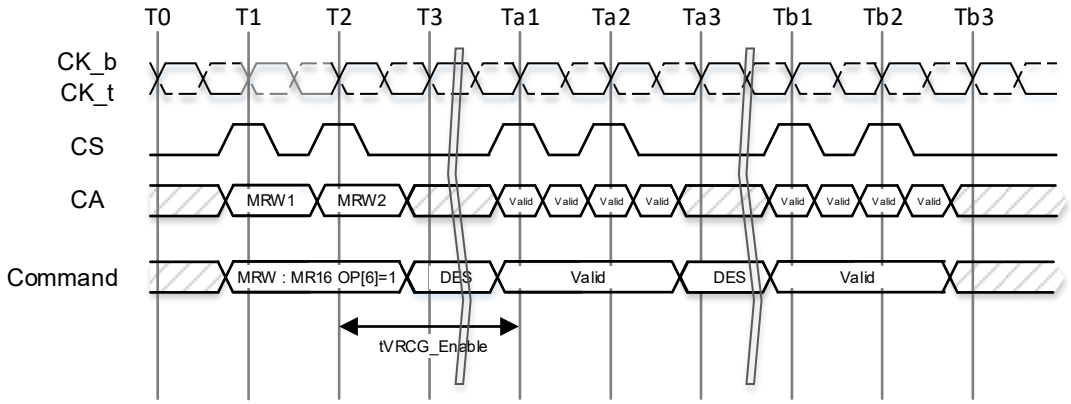

Figure 181 — VRCG Enable Timing

VRCG high current mode is disabled by setting MR16 OP[6] = 0. Only Deselect commands may be issued until tVRCG_DISABLE is satisfied. tVRCG_DISABLE timing is shown in Figure 182.

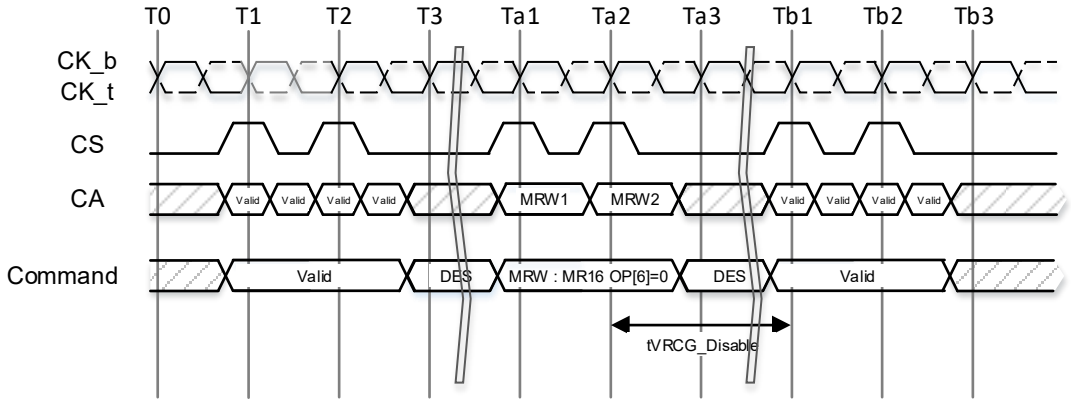

Figure 182 — VRCG Disable Timing

Note that LPDDR5 SDRAM devices support V_{REF}(CA) and V_{REF}(DQ) range and value changes without enabling VRCG high current mode.

Table 266 — VRCG Enable / Disable Timing

Parameter	Symbol	Min	Max	Unit	Note
V_{REF} High Current Mode Enable Time	tVRCG_ENABLE		150	ns	
V_{REF} High Current Mode Disable Time	tVRCG_DISABLE		100	ns	

7.6.9 VREF(CA) update timing

In case of VRCG is high current mode: MR16 OP[6]=1_B, LPDDR5 V_{REF}(CA) setting time which update by MRW command is shown in **Figure 183**.

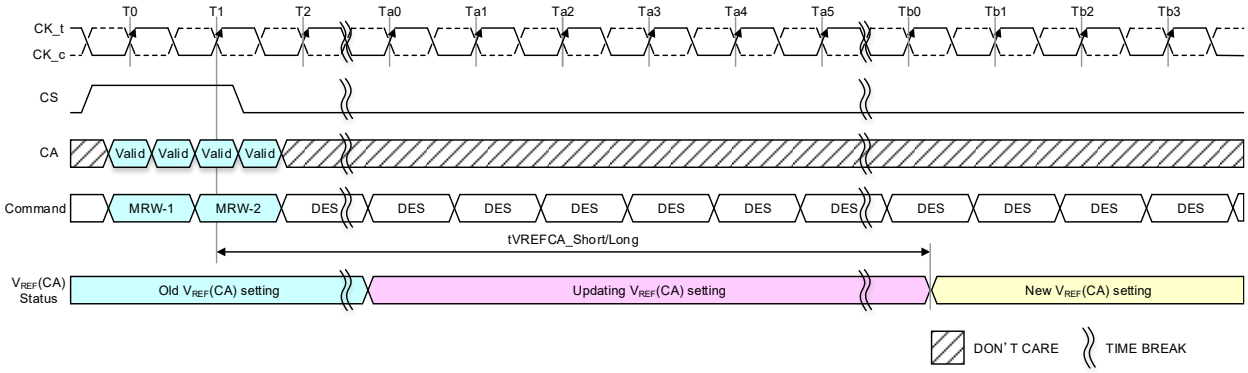

NOTE 1 VRCG (VREF Current Generator): MR16 OP[6]=1_B.
NOTE 2 Only DES Command is allowed till tVREFCA_Short/Long is satisfied.

Figure 183 - V_{REF}(CA) update timing: VRCG is High Current Mode

In case of VRCG is Normal operation: MR16 OP[6]=0_B, LPDDR5 VREF(CA) setting time which update by MRW command is shown in **Figure 184**.

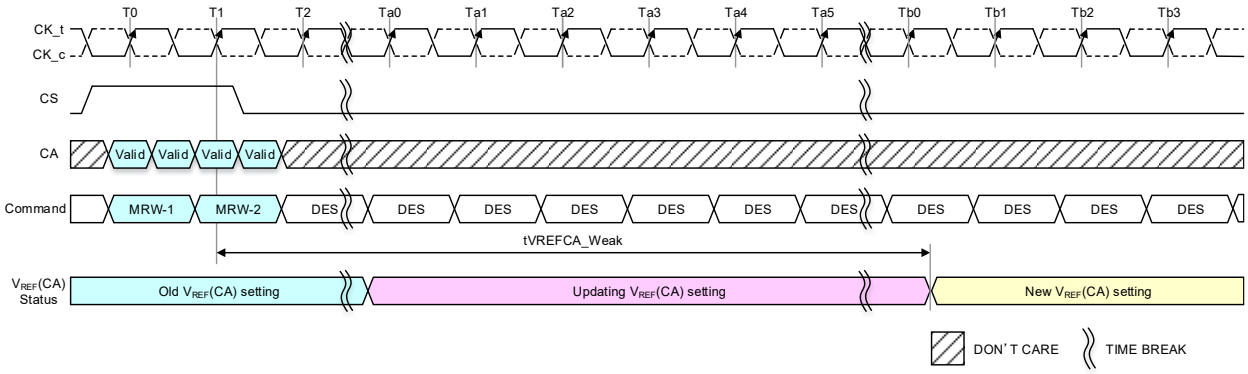

NOTE 1 VRCG (VREF Current Generator): MR16 OP[6]=0_B.
NOTE 2 Only DES Command is allowed till tVREFCA_Weak is satisfied.

Figure 184 - V_{REF}(CA) update timing: VRCG is Normal Operation

Table 267 - V_{REF}(CA) update timing AC Timing Table

Item	Symbol	Min/ Max	CK Frequency (MHz)												Unit	Notes
			67	133	200	267	344	400	467	533	600	688	750	800		
VREF(CA) update parameters																
V_{REF}(CA) update timing	tVREFCA_Short	Min	200+0.5tCK												ns	1,2,3
	tVREFCA_Long	Min	250+0.5tCK												ns	1,2,4
	tVREFCA_Weak	Min	1												ms	6

NOTE 1 V_{REF}(CA) update timing depends on value of V_{REF}(CA) setting: MR12 OP[6:0].
NOTE 2 The value is assumed that VRCG is setting High current mode: MR16 OP[6]=1_B.
NOTE 3 tCK for this timing is the tCK value of the operating frequency when the MRW is issued.
NOTE 4 VREFCA_Short is for a single step size increment/decrement change in V_{REF}(CA) voltage.
NOTE 5 VREFCA_Long is for at least 2 step sizes increment/decrement change including up to V_{REF}min to V_{REF}max or V_{REF}max to V_{REF}min change in V_{REF}(CA) voltage.
NOTE 6 The value is assumed that VRCG is setting Normal Operation: MR16 OP[6]=0_B.

7.6.10 VREF(DQ) update timing

In case of VRCG is high current mode: MR16 OP[6]=1_B, LPDDR5 V_{REF}(DQ) setting time which update by MRW command is shown in **Figure 183**.

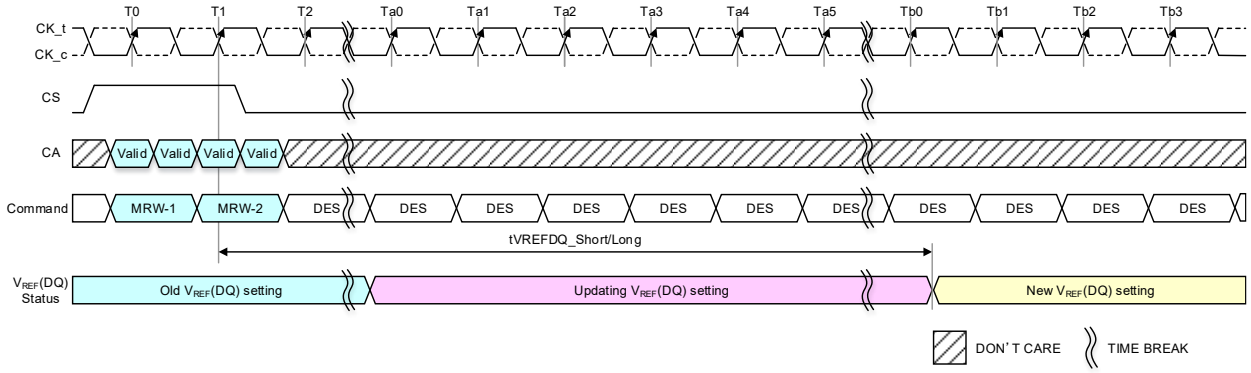

NOTE 1 VRCG (VREF Current Generator): MR16 OP[6]=1_B.
NOTE 2 DES commands are shown for ease of illustration; other commands may be valid at these times.
NOTE 3 The WCK and Data input is prohibited till the tVREFDQ_Short/Long period is satisfied.

Figure 185 - V_{REF}(DQ) update timing: VRCG is High Current Mode

In case of VRCG is Normal operation: MR16 OP[6]=0_B, LPDDR5 VREF(DQ) setting time which update by MRW command is shown in **Figure 186**.

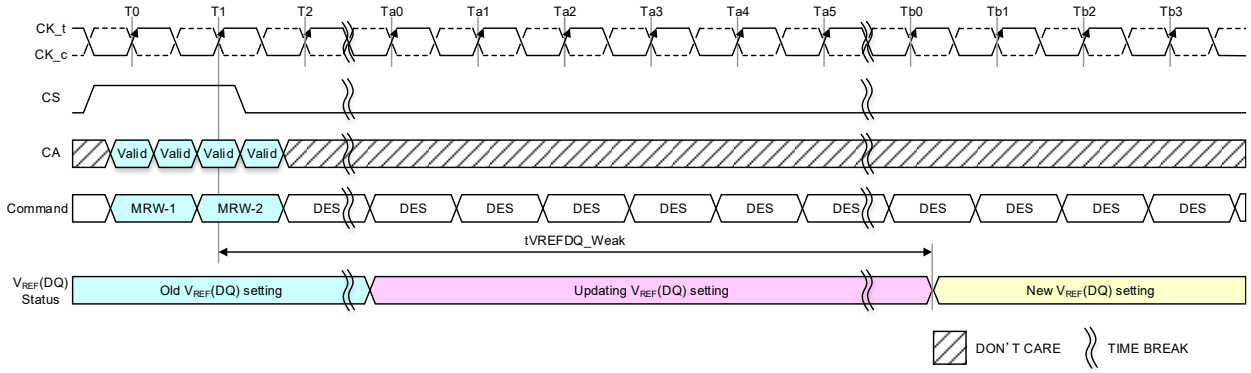

NOTE 1 VRCG (VREF Current Generator): MR16 OP[6]=0_B.
NOTE 2 DES commands are shown for ease of illustration; other commands may be valid at these times.
NOTE 3 The WCK and Data input is prohibited till the tVREFDQ_Weak period is satisfied.

Figure 186 - V_{REF}(DQ) update timing: VRCG is Normal Operation

Table 268 - V_{REF}(DQ) update timing AC Timing Table

Item	Symbol	Min/ Max	Data Rate (Mbps)												Unit	Notes
			533	1067	1600	2133	2750	3200	3733	4267	4800	5500	6000	6400		
V_{REF}(DQ) update parameters																
V_{REF}(DQ) update timing	tVREFDQ_Short	Min	200+0.5tCK												ns	1,2,3
	tVREFDQ_Long	Min	250+0.5tCK												ns	1,2,4
	tVREFDQ_Weak	Min	1												ms	6

NOTE 1 V_{REF}(DQ) update timing depends on value of V_{REF}(DQ) setting: MR14 OP[6:0] and MR15 OP[6:0].
NOTE 2 The value is assumed that VRCG is setting High current mode: MR16 OP[6]=1_B.
NOTE 3 tCK for this timing is the tCK value of the operating frequency when the MRW is issued.
NOTE 4 VREFDQ_Short is for a single step size increment/decrement change in V_{REF}(DQ) voltage.
NOTE 5 VREFDQ_Long is for at least 2 step sizes increment/decrement change including up to V_{REF}min to V_{REF}max or V_{REF}max to V_{REF}min change in V_{REF}(DQ) voltage.
NOTE 6 The value is assumed that VRCG is setting Normal Operation: MR16 OP[6]=0_B.

7.6.11 Thermal Offset

Because of their tight thermal coupling with the LPDDR5 device, hot spots on an SOC can induce thermal gradients across the LPDDR5 device. As these hot spots may not be located near the device thermal sensor, the devices' temperature compensated self-refresh circuit may not generate enough refresh cycles to guarantee memory retention. To address this shortcoming, the controller can provide a thermal offset that the memory uses to adjust its TCSR circuit to ensure reliable operation.

This offset is provided through MR13 OP[1:0]. This temperature offset may modify refresh behavior. It will take a max of 200us to have the change reflected in MR4 OP[4:0]. If the induced thermal gradient from the device temperature sensor location to the hot spot location of the controller is larger than 15 degrees C, then self-refresh mode will not reliably maintain memory contents.

To accurately determine the temperature gradient between the memory thermal sensor and the induced hot spot, the memory thermal sensor location must be provided to the LPDDR5 memory controller.

7.6.12 Temperature Sensor

LPDDR5 devices feature a temperature sensor whose status can be read from MR4. This sensor can be used to determine an appropriate refresh rate, determine whether AC timing de-rating is required in the elevated temperature range, and/or monitor the operating temperature. Either the temperature sensor or the device TOPER may be used to determine whether operating temperature requirements are being met.

LPDDR5 devices shall monitor device temperature and update MR4 according to tTSI. Device temperature status bits shall be no older than tTSI. MR4 will be updated even when device is in self refresh state.

When using the temperature sensor, the actual device case temperature may be higher than the TOPER specification that applies for the standard or elevated temperature ranges. For example, TCASE may be above 85°C when MR4[4:0] equals 'b01001. LPDDR5 devices shall allow for 2°C temperature margin between the point at which the device updates the MR4 value and the point at which the controller reconfigures the system accordingly. In the case of tight thermal coupling of the memory device to external hot spots, the maximum device temperature might be higher than what is indicated by MR4

To assure proper operation using the temperature sensor, applications should consider the following factors:

- TempGradient is the maximum temperature gradient experienced by the memory device at the temperature of interest over a range of 2 °C.
- ReadInterval is the time period between MR4 reads from the system.
- TempSensorInterval (tTSI) is maximum delay between internal updates of MR4.
- SysRespDelay is the maximum time between a read of MR4 and the response by the system.

7.6.9 Temperature Sensor (Cont'd)

In order to determine the required frequency of polling MR4, the system shall use the maximum TempGradient and the maximum response time of the system using the following equation:

TempGradient x (ReadInterval + tTSI + SysRespDelay) ≤ 2°C

Table 269 — Temperature Sensor

Parameter	Symbol	Max/ Min	Value	Unit	Note
System Temperature Gradient	TempGradient	Max	System Dependent	°C/s	
MR4 Read Interval	ReadInterval	Max	System Dependent	ms	
Temperature Sensor Interval	tTSI	Max	32	ms	
System Response Delay	SysRespDelay	Max	System Dependent	ms	
Device Temperature Margin	TempMargin	Max	2	°C	

For example, if TempGradient is 10°C/s and the SysRespDelay is 1 ms: (10°C/s) x (ReadInterval + 32ms + 1ms) ≤ 2°C.

In this case, ReadInterval shall be no greater than 167 ms.

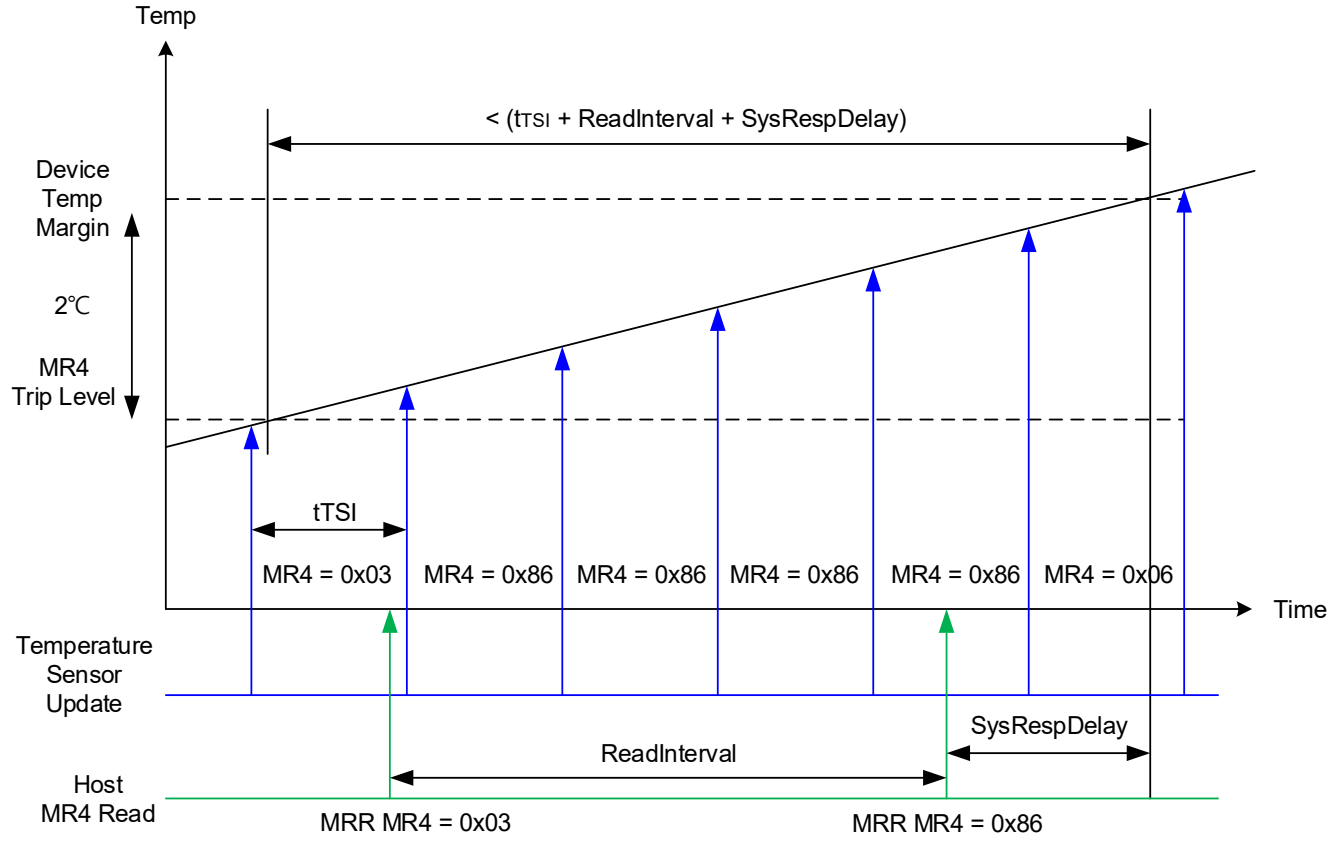

Figure 187 — Temp Sensor Timing

7.6.13 Multi-Purpose Command (MPC)

LPDDR5 SDRAM uses the MPC command to issue commands about ZQ calibration and WCK2DQx Interval Oscillator. The MPC command is initiated with CS, and CA[6:0] asserted to the proper state at the crossing points of CK_t and CK_c, as defined by the Command Truth Table, **Table 178**. The MPC command has eight operands (OP[7:0]) that are decoded to execute specific commands in the SDRAM. OP[7] is a special bit that is decoded on the first crossing point of CK_t and CK_c of the MPC command.

The MPC command supports the following functions:

- Start WCK2DQI Interval Oscillator
- Stop WCK2DQI Interval Oscillator
- Start WCK2DQO Interval Oscillator
- Stop WCK2DQO Interval Oscillator
- ZQ CAL Start
- ZQ CAL Latch

Table 270 — MPC Command Definition

SDRAM COMMAND	DDR COMMAND PINS								CK_t edge	Notes
	CS	CA0	CA1	CA2	CA3	CA4	CA5	CA6		
MULTI PURPOSE COMMAND (MPC)	H	L	L	L	L	H	H	OP7	↑ R1	
	X	OP0	OP1	OP2	OP3	OP4	OP5	OP6	↓ F1	

Table 271 — MPC Command Definition for OP[7:0]

Function	Operand	Data	Notes
Commands	OP[7:0]	10000001_B: Start WCK2DQI Interval Oscillator 10000010_B: Stop WCK2DQI Interval Oscillator 10000011_B: Start WCK2DQO Interval Oscillator 10000100_B: Stop WCK2DQO Interval Oscillator 10000101_B: ZQ CAL Start 10000110_B: ZQ CAL Latch All Others: Reserved	

7.6.14 tWCK2DQ Interval Oscillator

As voltage and temperature change on the SDRAM die, the WCK clock tree delay will shift and may require re-training. The LPDDR5-SDRAM includes an internal CK based WCK2DQx Interval Oscillator to measure the amount of delay over a given time interval (determined by the controller), allowing the controller to compare the trained delay value to the delay value seen at a later time. The CK based WCK2DQx Interval Oscillator will provide the controller with important information regarding the need to re-train, and the magnitude of potential error in WCK clock tree. In order to provide low power interval oscillator to user, the WCK2DQx Interval Oscillator counts the number of CK cycles, not the number of WCK cycles.

The WCK2DQx Interval Oscillator is started by issuing a MPC [Start WCK2DQI Osc] or MPC [Start WCK2DQO Osc] command with OP[7:0] set as described in the MPC Operation section, which will start an internal ring oscillator. A counter is implemented to count the number of times a signal propagates through a replica of the WCK clock tree during the established time interval.

The WCK2DQx Interval Oscillator may be stopped by issuing a MPC [Stop WCK2DQI Osc] or MPC [Stop WCK2DQO Osc] command with OP[7:0] set as described in the MPC Operation section, or the controller may instruct the SDRAM to count for a specific number of clocks and then stop automatically (See MR37/MR40 for more information). If MR37 or MR40 is set to automatically stop the WCK2DQx Interval Oscillator, then the MPC [Stop WCK2DQI Osc] or MPC [Stop WCK2DQO Osc] command should not be used (illegal). MR37 WCK2DQI interval timer run time setting is prohibited to change during WCK2DQI Interval Oscillator is running. As with MR37, MR40 WCK2DQO interval timer run time setting is prohibited to change during WCK2DQO Interval Oscillator is running. When the WCK2DQx Interval Oscillator is stopped by either method, the result of the oscillator counter for WCK2DQI is automatically stored in MR35 and MR36, and the data for WCK2DQO is also stored in MR38 and MR39.

A new MPC [Start WCK2DQI Osc] or MPC [Start WCK2DQO Osc] command with OP[7:0] can be issued, and the new MPC [Start WCK2DQI Osc] or MPC [Start WCK2DQO Osc] command will reset the stored result in MR35/36 or MR38/39, respectively. If power down or deep sleep mode command is issued while WCK2DQ Interval Oscillator is operating, DRAM will stop operating oscillator. In this case, results stored in MR35/36 or MR38/39 are invalid and shall be ignored.

WCK2DQI Interval Oscillator and WCK2DQO Interval Oscillator cannot be operated simulataneously. After completing WCK2DQI(or WCK2DQO) Interval Oscillator operation, WCK2DQO (or WCK2DQI) Interval Oscaillator Start MPC can be issued. To track tWCK2DQx variation of different WCK frequency modes (MR18 OP[3]), user can specify WCK2DQx oscillator for WCK low or high frequency mode via MR18 OP[5]. When operating in WCK low frequency mode (MR18 OP[3]=0_B), WCK2DQx oscillator for WCK high frequency mode (MR18 OP[5]=1_B) can be enabled and vice versa.

The controller may adjust the accuracy of the result by running the WCK2DQx Interval Oscillator for shorter (less accurate) or longer (more accurate) duration. The accuracy of the result for a given temperature and voltage is determined by the following equation:

$$\textbf{WCK2DQx Interval Oscillator Granularity Error} = \frac{2 * (\boldsymbol{WCK2DQx\ Delay})}{\boldsymbol{Run\ Time}}$$

Where:

Run Time = Total time between start and stop commands
WCK2DQ delay = the value of the WCK clock tree delay (tWCK2DQ min/max)

Additional matching error must be included, which is the difference between WCK training circuit and the actual WCK clock tree across voltage and temperature.
Therefore, the total accuracy of the WCK2DQx Interval Oscillator counter is given by:

WCK2DQx Interval Oscillator Accuracy = 1 - Granularity Error - Matching Error

Example: If the total time between start and stop commands is 200ns, and the maximum WCK clock tree delay is 1600ps (tWCK2DQO max), then the WCK Oscillator Granularity Error is:

$$\textbf{WCK2DQx Interval Oscillator Granularity Error} = \frac{2 * (\boldsymbol{1.6ns})}{\boldsymbol{200ns}} = \boldsymbol{1.6\%}$$

This equates to a granularity timing error of 25.6ps.

Assuming a circuit Matching Error of 5.5ps across voltage and temperature, then the accuracy is:

$$\textbf{WCK2DQx Interval Oscillator Accuracy} = \boldsymbol{1 - \frac{25.6ps + 5.5ps}{1600ps} = 98.06\%}$$

Example: Running the WCK Oscillator for a longer period improves the accuracy. If the total time between start and stop commands is 500ns, and the maximum WCK clock tree delay is 1600ps (tWCK2DQO max), then the WCK Oscillator Granularity Error is:

$$\textbf{WCK2DQx Oscillator Granularity Error} = \frac{2 * (\boldsymbol{1.6ns})}{\boldsymbol{500ns}} = \boldsymbol{0.64\%}$$

This equates to a granularity timing error of 10ps.
Assuming a circuit Matching Error of 5.5ps across voltage and temperature, then the accuracy is:

$$\textbf{WCK2DQx Oscillator Accuracy} = \boldsymbol{1 - \frac{10ps + 5.5ps}{1600ps} = 99.0\%}$$

The result of the WCK2DQx Interval Oscillator is defined as the number of CK cycles which reflects WCK Clock Tree Delays that are counted during the run time determined by the controller. The result for WCK2DQI is stored in MR35-OP[7:0] and MR36-OP[7:0], and that for WCK2DQO is also stored in MR38-OP[7:0] and MR39-OP[7:0]. MR35 and MR38 contain the least significant bits (LSB) of the result for WCK2DQI and WCK2DQO, respectively. MR36 andMR39 contain the most significant bits (MSB) of the result for WCK2DQI and WCK2DQO, respectively.

MR35 and MR36 are overwritten by the SDRAM when a MPC-1 [Stop WCK2DQI Osc] command is received. Similarly, for a WCK2DQI stop command, MR38 and MR39 is also overwritten when SDRAM receives MPC-1 [Stop WCK2DQO Osc] command.

The SDRAM counter will count to its maximum value (=2^16) and stop. If the maximum value is read from the mode registers, then the memory controller must assume that the counter overflowed the register and discard the result. The longest “run time” for the oscillator that will not overflow the counter registers can be calculated as follows:

$$\text{Longest WCK2DQI Run Time Interval} = 2^{16} * \text{tWCK2DQ(min)} = 2^{16} * 0.3\text{ns} = 19.66\text{us}$$

$$\text{Longest WCK2DQO Run Time Interval} = 2^{16} * \text{tWCK2DQ(min)} = 2^{16} * 0.65\text{ns} = 42.6\text{us}$$

7.6.14.1 Interval Oscillator Matching Error

The interval oscillator matching error is defined as the difference between the WCK training circuit (interval oscillator) and the actual WCK clock tree across voltage and temperature.

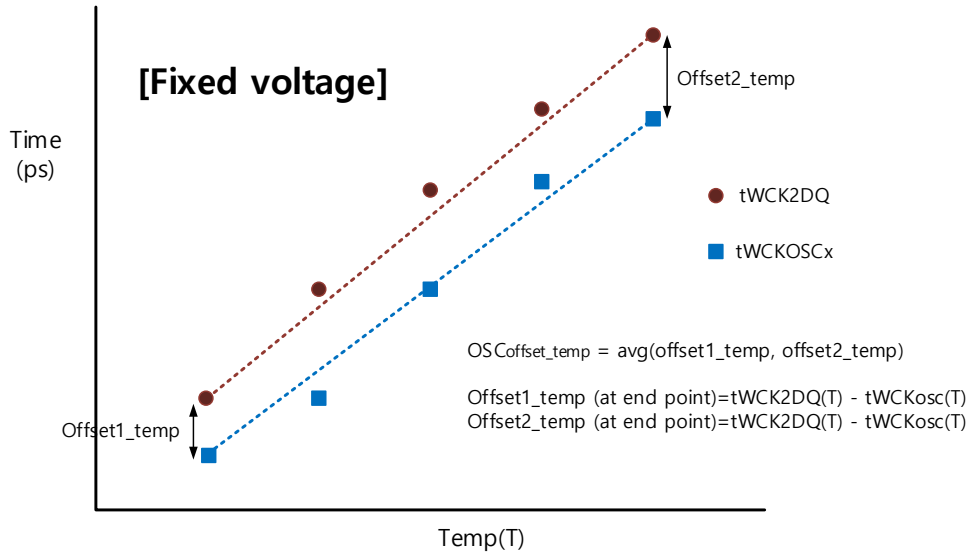

Figure 188 - Interval oscillator offset_temp

- OSC_{Match_temp} : $\mathbf{OSC_{Match_temp} = [tWCK2DQ_{(T)} - tWCKosc_{(T)} - OSC_{offset_temp}]}$
- tWCKosc(T) : $\mathbf{tWCKosc(T)} = \frac{\boldsymbol{Run\ Time}}{\boldsymbol{2*Count}}$

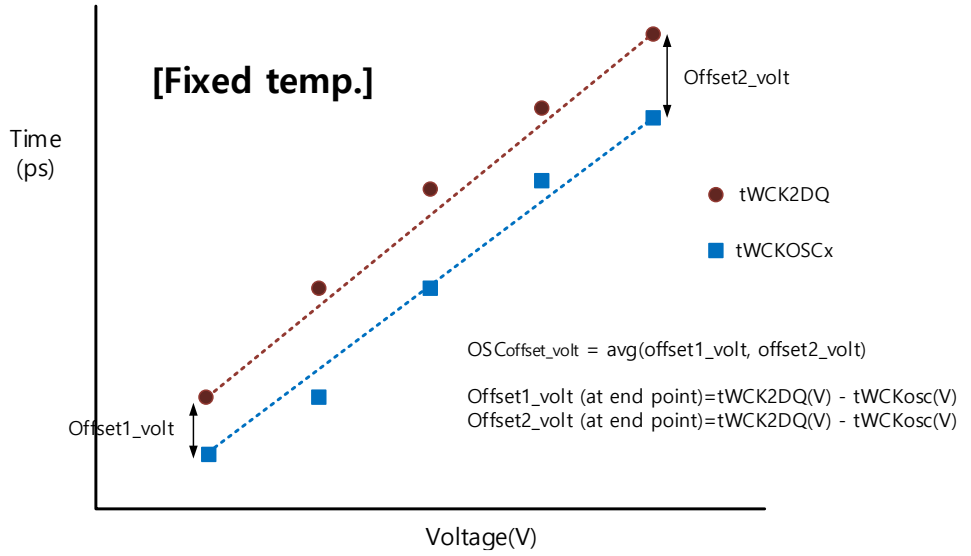

Figure 189 - Interval oscillator offset_volt

- OSC_{Match_volt} : $\mathbf{OSC_{Match_volt} = [tWCK2DQ_{(V)} - tWCKosc_{(V)} - OSC_{offset_volt}]}$
- tWCKosc(V) : $\mathbf{tWCKosc(V)} = \frac{\boldsymbol{Run\ Time}}{\boldsymbol{2*Count}}$

Table 272 - WCK Oscillator Matching Error Specification for HF mode

Parameter	Symbol	Min	Max	Units	Notes
Write WCK Oscillator Matching Error: voltage variation	$WOSC_{Match_volt}$	-7.5	7.5	ps	1,2,3,5
Write WCK Oscillator Error: Temperature variation	$WOSC_{Match_temp}$	-7.5	7.5	ps	1,2,3,5
Write WCK Oscillator Offset For voltage variation	$WOSC_{offset_volt}$	-100	100	ps	2,5
Write WCK Oscillator Offset For temp variation	$WOSC_{offset_temp}$	-100	100	ps	2,5
Read WCK Oscillator Matching Error: voltage variation	$ROSC_{Match_volt}$	-20	20	ps	1,2,3,6
Read WCK Oscillator Error: Temperature variation	$ROSC_{Match_temp}$	-20	20	ps	1,2,3,6
Read WCK Oscillator Offset For voltage variation	$ROSC_{offset_volt}$	-200	200	ps	2,6
Read WCK Oscillator Offset For voltage variation	$ROSC_{offset_temp}$	-200	200	ps	2,6

NOTE 1 The WOSCmatch or ROSCmatch is the matching error per between the actual WCK and WCK interval oscillator over voltage and temp.
NOTE 2 This parameter will be characterized or guaranteed by design.
NOTE 3 The input stimulus for tWCK2DQ will be consistent over voltage and temp conditions.
NOTE 4 tWCK2DQ(V,T) delay will the average of WCK to DQ delay over the runtime period.
NOTE 5 The matching error and offset of WOSC is from WCK2DQI interval oscillator.
NOTE 6 The matching error and offset of ROSC is from WCK2DQO interval oscillator.

Table 273 - WCK Oscillator Matching Error Specification for LF mode

Parameter	Symbol	Min	Max	Units	Notes
Write WCK Oscillator Matching Error: voltage variation	$WOSC_{Match_volt}$	TBD	TBD	ps	1,2,3,5
Write WCK Oscillator Error: Temperature variation	$WOSC_{Match_temp}$	TBD	TBD	ps	1,2,3,5
Write WCK Oscillator Offset: Voltage variation	$WOSC_{offset_volt}$	TBD	TBD	ps	2,5
Write WCK Oscillator Offset: Temperature variation	$WOSC_{offset_temp}$	TBD	TBD	ps	2,5
Read WCK Oscillator Matching Error: voltage variation	$ROSC_{Match_volt}$	TBD	TBD	ps	1,2,3,6
Read WCK Oscillator Error: Temperature variation	$ROSC_{Match_temp}$	TBD	TBD	ps	1,2,3,6
Read WCK Oscillator Offset: Voltage variation	$ROSC_{offset_volt}$	TBD	TBD	ps	2,6
Read WCK Oscillator Offset: Temperature variation	$ROSC_{offset_temp}$	TBD	TBD	ps	2,6

NOTE 1 The WOSCmatch or ROSCmatch is the matching error per between the actual WCK and WCK interval oscillator over voltage and temp.
NOTE 2 This parameter will be characterized or guaranteed by design.
NOTE 3 The input stimulus for tWCK2DQ will be consistent over voltage and temp conditions.
NOTE 4 tWCK2DQ(V,T) delay will the average of WCK to DQ delay over the runtime period.
NOTE 5 The matching error and offset of WOSC is from WCK2DQI interval oscillator.
NOTE 6 The matching error and offset of ROSC is from WCK2DQO interval oscillator.

7.6.14.2 WCK2DQI/O interval Oscillator Readout Timing

7.6.14.2.1 WCK2DQI interval Oscillator

WCK2DQI interval Oscillator Stop to its counting value readout timing is shown in **Figure 190** and **Figure 191**.

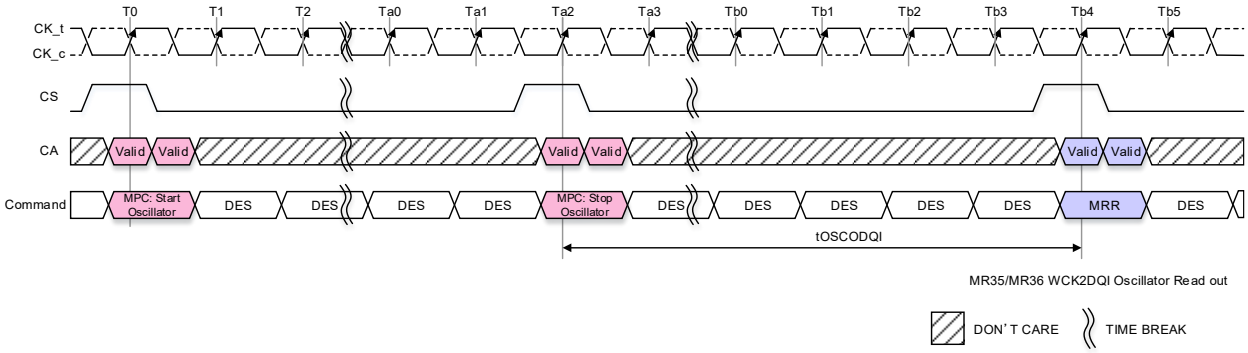

NOTE 1 The combination of “MPC: Start Oscillator” and “MPC: Stop Oscillator” is as following. Start WCK2DQI Interval Oscillator and Stop WCK2DQI Interval Oscillator.
NOTE 2 WCK2DQI interval timer run time: MR37 OP[7:0]=00000000_B.
NOTE 3 DES commands are shown for ease of illustration; other commands may be valid at these times.

Figure 190 - In case of WCK2DQI Interval Oscillator is stopped by MPC Command

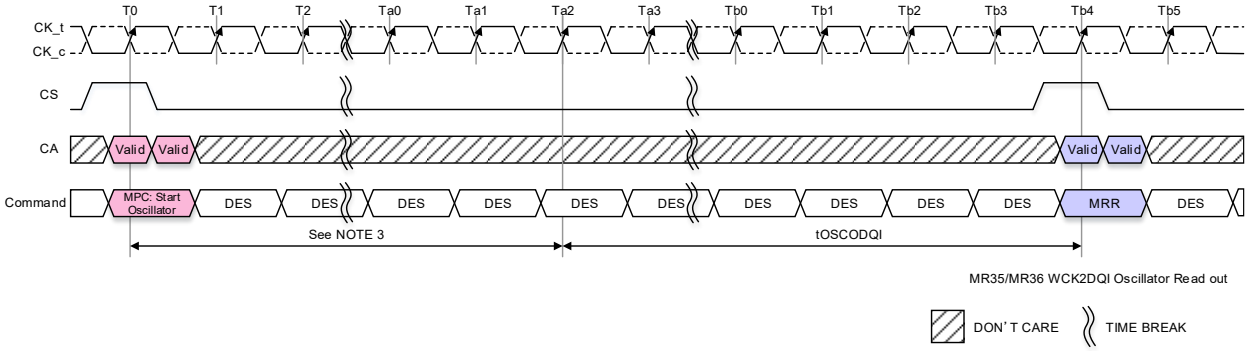

NOTE 1 The combination of “MPC: Start Oscillator” and “MPC: Stop Oscillator” is as following. Start WCK2DQI Interval Oscillator and Stop WCK2DQI Interval Oscillator.
NOTE 2 WCK2DQI interval timer run time: MR37 OP[7:0] ≠ 00000000_B.
NOTE 3 Setting counts of MR37 for WCK2DQI interval Oscillator.
NOTE 4 DES commands are shown for ease of illustration; other commands may be valid at these times.

Figure 191 - In case of WCK2DQI Interval Oscillator is stopped by Interval Timer

7.6.14.2.2 WCK2DQO interval Oscillator

WCK2DQO interval Oscillator Stop to its counting value readout timing is shown in **Figure 192** and **Figure 193**.

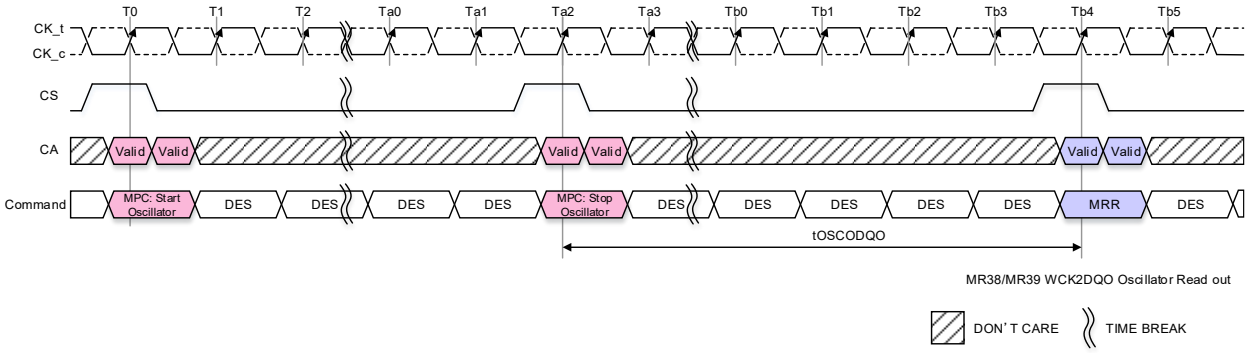

NOTE 1 The combination of “MPC: Start Oscillator” and “MPC: Stop Oscillator” is as following. Start WCK2DQO Interval Oscillator and Stop WCK2DQO Interval Oscillator.
NOTE 2 WCK2DQO interval timer run time: MR40 OP[7:0]=00000000_B.
NOTE 3 DES commands are shown for ease of illustration; other commands may be valid at these times.

Figure 192 - In case of WCK2DQO Interval Oscillator is stopped by MPC Command

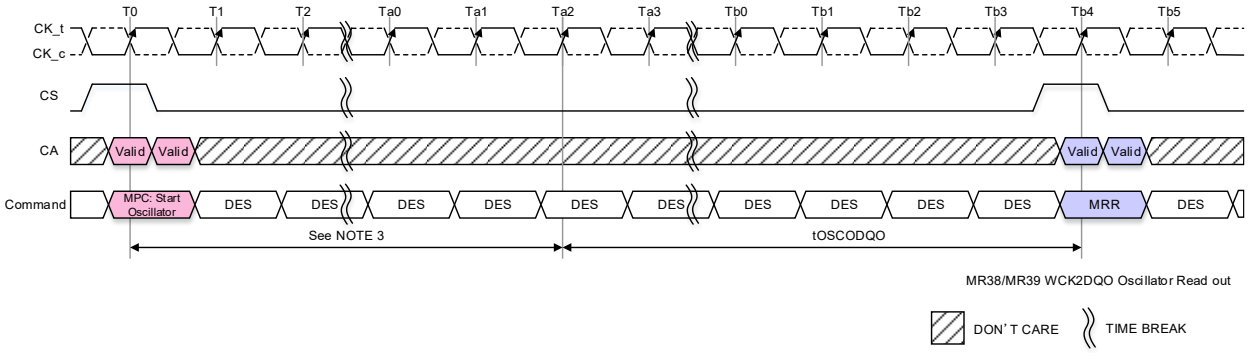

NOTE 1 The combination of “MPC: Start Oscillator” and “MPC: Stop Oscillator” is as following. Start WCK2DQO Interval Oscillator and Stop WCK2DQO Interval Oscillator.
NOTE 2 WCK2DQO interval timer run time: MR40 OP[7:0] ≠ 00000000_B.
NOTE 3 Setting counts of MR40 for WCK2DQO interval Oscillator.
NOTE 4 DES commands are shown for ease of illustration; other commands may be valid at these times.

Figure 193 - In case of WCK2DQO Interval Oscillator is stopped by Interval Timer

7.6.14.3 WCK2DQI(O) Interval Oscillator Start/Stop Command Constraints

WCK2DQI/WCK2DQO Interval Oscillator Start/Stop Command Constraints is shown in **Figure 194**.

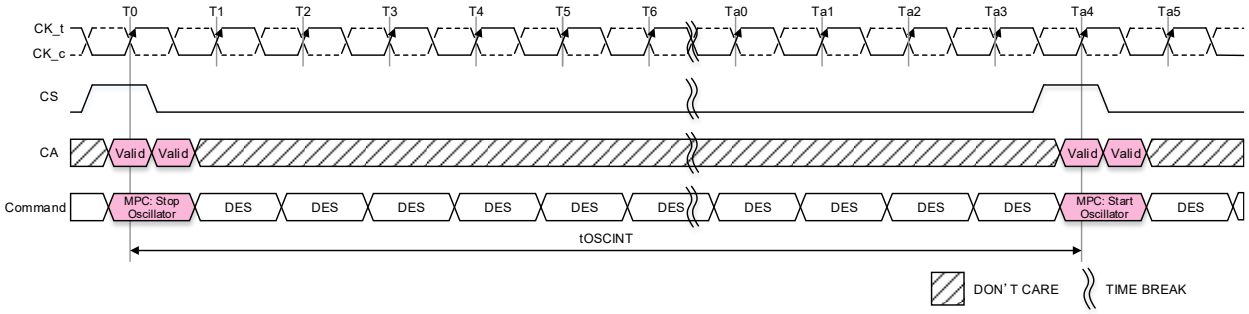

NOTE 1 This parameter applies a following combination.
- MPC Stop WCK2DQI Interval Oscillator to MPC Start WCK2DQO Interval Oscillator.
- MPC Stop WCK2DQO Interval Oscillator to MPC Start WCK2DQI Interval Oscillator.
- MPC Stop WCK2DQI Interval Oscillator to MPC Start WCK2DQI Interval Oscillator.
- MPC Stop WCK2DQO Interval Oscillator to MPC Start WCK2DQO Interval Oscillator.

Figure 194 - WCK2DQI/WCK2DQO Interval Oscillator Start/Stop Command Constraints Timing

Table 274 - WCK2DQI/WCK2DQO Interval Oscillator AC Timing

Parameter	Symbol	Min/ Max	Value	Units	Notes
Delay time from Stop WCK2DQI Interval Oscillator command to Mode Register Readout	tOSCODQI	Min	Max(40ns,8nCK)	ns	
Delay time from Stop WCK2DQO Interval Oscillator command to Mode Register Readout	tOSCODQO	Min	Max(40ns,8nCK)	ns	
Delay time from MPC OSC Stop command to MPC OSC Start command	tOSCINT	Min	Max(40ns,8nCK)	ns	

7.7 Specific features, Reliability & Power-optimization

7.7.1 Dynamic Voltage and Frequency Scaling (DVFS)

LPDDR5 Dynamic Voltage and Frequency Scaling (DVFS) consists of two modes intended to reduce the LPDRAM energy consumption. The two modes are DVFSC (DVFS Core) and DVFSQ (DVFS V_{DDQ}).

7.7.1.1 DVFSC Mode

In DVFSC mode, when enabled by MR19 OP[1:0]=01_B, the LPDRAM may operate internal circuitry from either the V_{DD2H} rail or the V_{DD2L} rail. When the memory controller commands a FSP change, the LPDRAM may internally switch some internal circuits from one rail to the other. This switching will complete within tFC, when normal operation at the new frequency set point may commence. DVFSC mode changes are only allowed as part of FSP-OP switching. Changes to DVFSC mode by direct programming of MR19 OP[1:0] for the current operating point are illegal.

Some LPDRAM operations will take longer to complete when DVFSC is enabled. Latencies and AC timing parameters are specified in separate tables depending on the current DVFSC state of the LPDRAM.

Application usage of DVFSC mode is optional. Systems which will not implement DVFSC must supply the specified V_{DD2H} voltage level to both the V_{DD2H} and V_{DD2L} rails of the LPDRAM, and must set MR13 OP[7]=1 and MR19 OP[1:0]=00B at all times.

Figures 1 and 2 below illustrate DVFSC high-to-low and low-to-high timing respectively. In these diagrams commands other than the FSP switch are shown as examples only. For more information on FSP switching refer to the section “Frequency Set Points”.

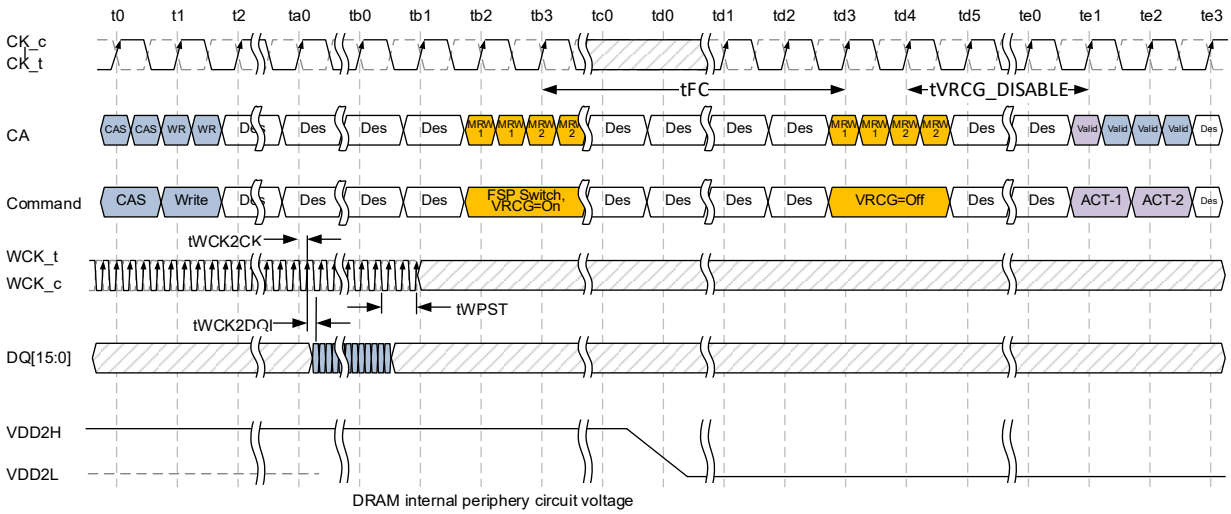

Figure 195 DVFSC High (VDD2H) to Low (VDD2L) Transition

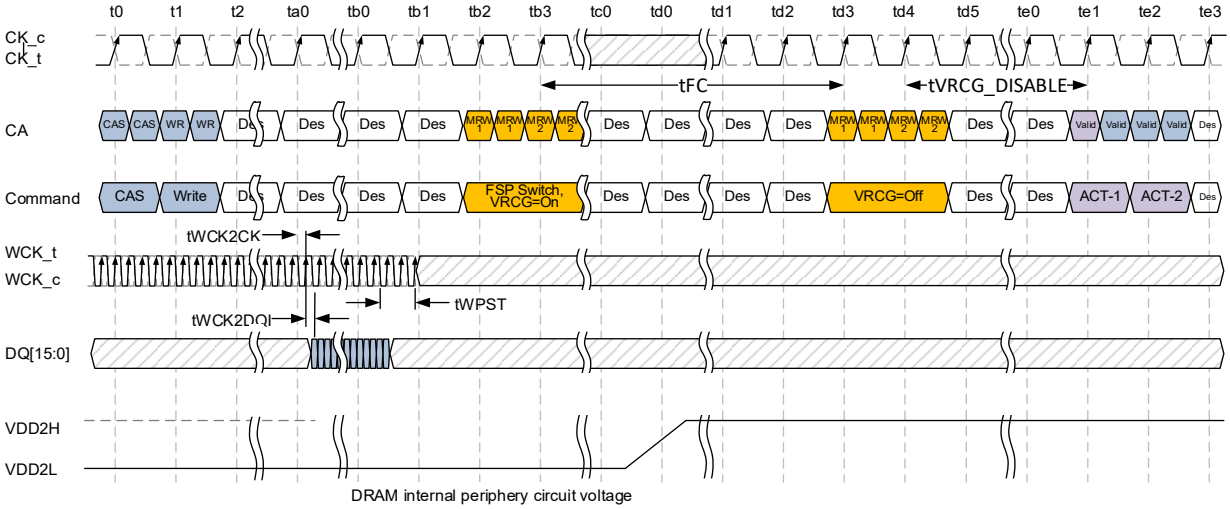

Figure 196 DVFSC Low (VDD2L) to High (VDD2H) Transition

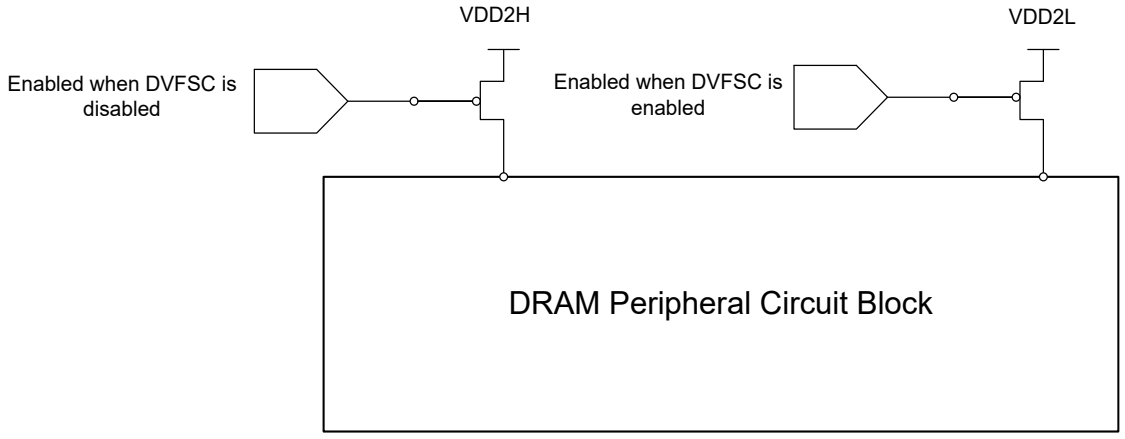

Figure 197 Example DVFSC Block Diagram

7.7.1.2 DVFSQ Mode

LPDDR5 devices can allow the V_{DDQ} to be ramped during operation including Read/Write transactions. Exact speeds and levels are to be determined by the system builder according to the limits specified in this standard, their own system limitations, and at their own risk. Some guidelines are:
If operation of the LPDRAM will be halted during the V_{DDQ} voltage ramp

1. The device must be placed in power-down mode or CS held low until the voltage ramp is complete
2. Re-calibration is recommended before high-speed operation at VDDQ=0.5v nominal after ramping the VDDQ level
3. FSP change to appropriate new settings should occur before operation at the new level

If operation of the LPDRAM during the V_{DDQ} voltage ramp is intended

1. The LPDRAM should be operated at settings and speeds suitable for the lowest V_{DDQ} level
2. Operation with ODT disabled is highly recommended, and generally required for V_{DDQ} levels below 0.5V nominal
3. The V_{DDQ} voltage ramp should always be equal or slower than the specified limits
4. Recommended to set VRCG enabled to ensure internal Vref tracking of the changing V_{DDQ} level
5. Re-calibration is recommended before high-speed operation at VDDq=0.5v nominal after ramping the VDDQ level
6. FSP change to appropriate new settings should occur before higher-speed operation at the new level

7.7.1.2.1 DVFSQ High-to-Low Transition

An example DVFSQ high-to-low transition sequence is:

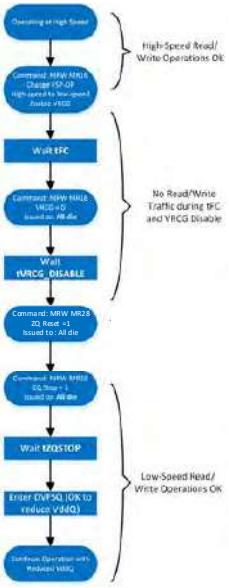

1. Operating at high speed with VddQ=0.5v nominal
2. FSP switch from high frequency to a low frequency suitable for non-ODT operation, enable VRCG
3. Wait tFC (stall traffic)
4. Issue MRW MR16 – set VRCG = 0
5. Wait tVRCG_DISABLE (stall traffic)
6. Issue MRW MR28 – ZQ reset OP[0] = 1 to set default ZQ strength to meet VDDQ = 0.3V operation
7. Wait tZQRESET without ZQ latch
8. Issue MRW MR28 – set ZQ Stop=1 to disable background calibration
9. Wait tZQSTOP
10. Enter DVFSQ (reduce VDDQ below 0.5v nominal)
11. Continue operation with reduced VddQ

Background ZQ Calibration mode is assumed. Refer to Section 4.2.1 'LPDDR5 ZQ Calibration' for details and options related to ZQ requirements.

Figure 4 DVFSQ High (VDDQ) to Low Transition Flow Chart

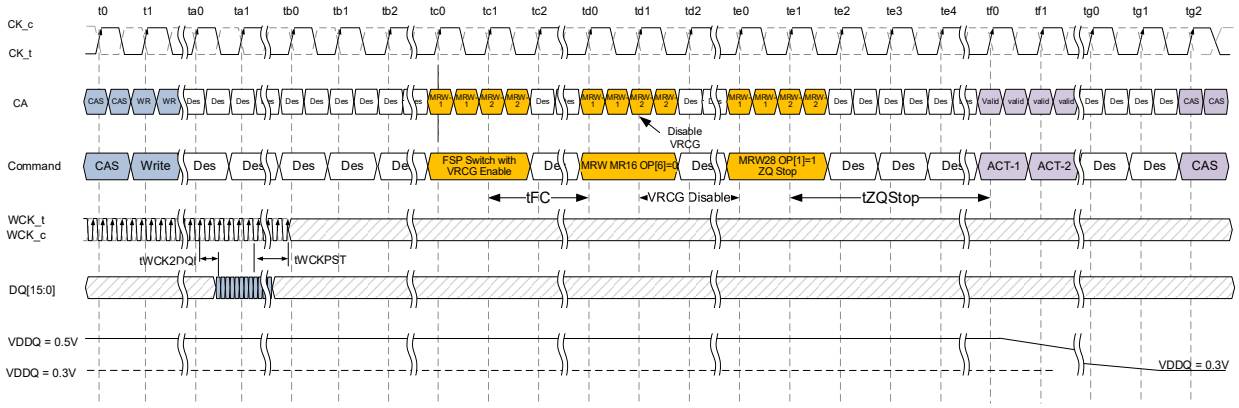

Figure 5 DVFSQ High (VDDQ) to Low Transition Timing

7.7.1.2.2 DVFSQ Low-to-High Transition without VRCG during VDDQ ramp

An example DVFSQ low-to-high transition sequence is:

1. Operating at low speed with VDDQ<0.5v nominal
2. Ramp VDDQ up to 0.5v nominal
3. Issue MRW MR28 – set ZQ Stop=0 to enable background calibration
4. Wait tZQCALx
5. FSP switch from low frequency to high frequency and VRCG enabled
6. Wait tFC (stall traffic)
7. Issue MRW 16 to disable VRCG
8. Wait tVRCG_DISABLE (stall traffic)
9. Begin high-speed operation with VDDQ=0.5v nominal

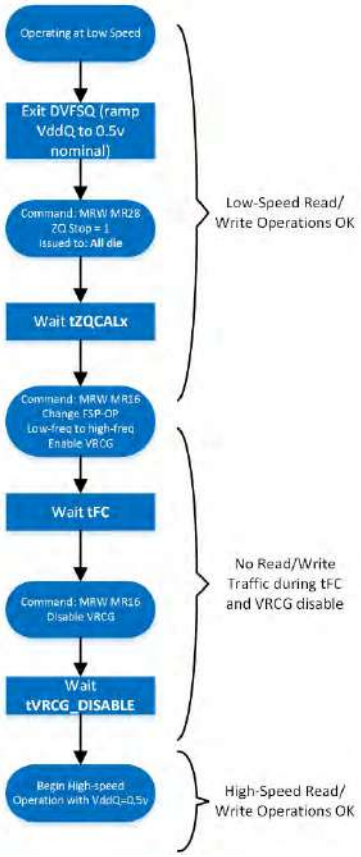

Figure 6 DVFSQ Low (VDDQ) to High (VDDQ) Transition Flow Chart without VRCG

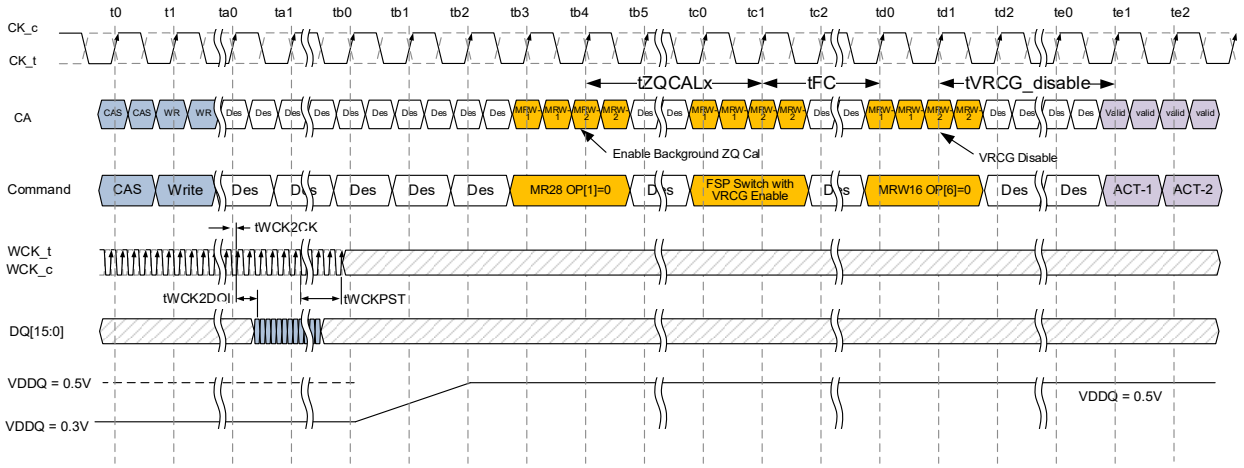

Figure 7 DVFSQ Low (VDDQ) to High Transition Timing without VRCG during VDDQ ramp

7.7.1.2.3 DVFSQ Low-to-High Transition with VRCG

Enabling VRCG before a VDDQ level transition allows the VREF circuits to accurately track during higher VDDQ slew rates, as shown in table 1 below. An example DVFSQ low-to-high transition sequence including use of VRCG mode is:

1. Operating at low speed with VddQ<0.5v nominal
2. Enable VRCG
3. Wait tVRCG_enable (stall traffic)
4. Ramp VddQ up to 0.5v nominal
5. Issue MRW MR28 – set ZQ Stop=0 to enable background calibration
6. Wait tZQCALx
7. FSP switch from low frequency to high frequency
8. Wait tFC (stall traffic)
9. Disable VRCG
10. Wait tVRCG_disable (continue stall traffic)
11. Begin high-speed operation with VddQ=0.5v nominal

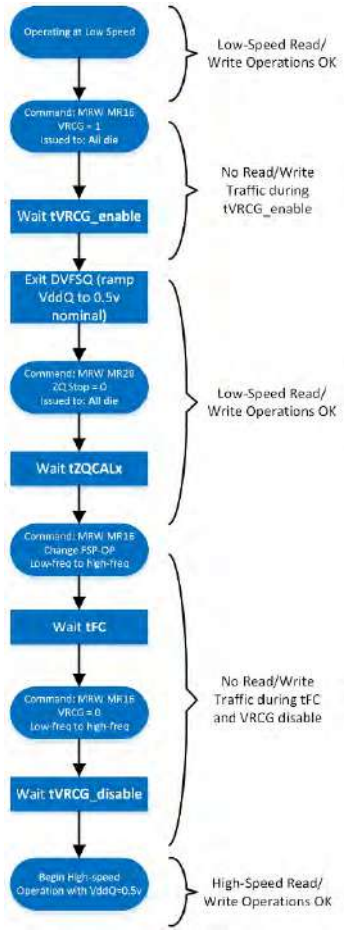

Figure 8 DVFSQ Low (VDDQ) to High (VDDQ) Transition Flow Chart with VRCG

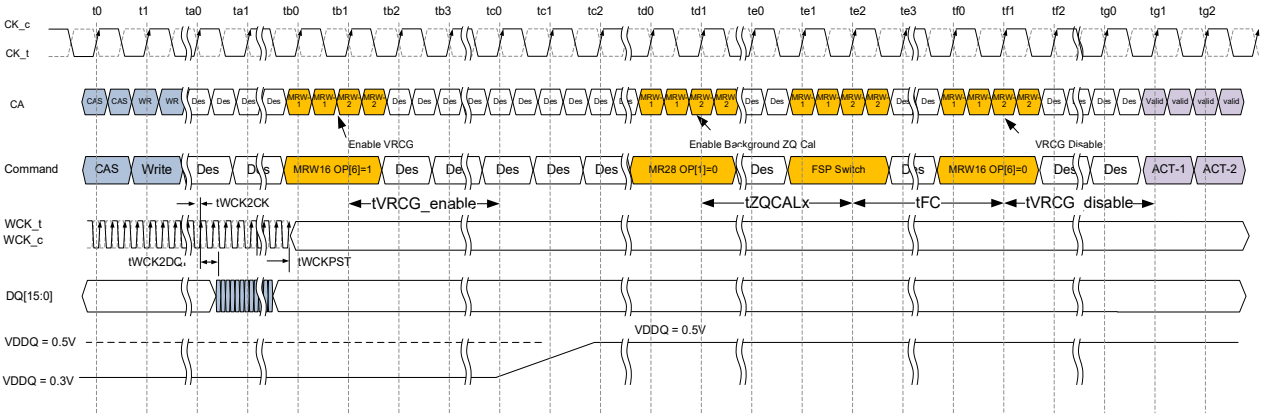

Figure 9 DVFSQ Low (VDDQ) to High Transition with VRCG

In DVFSQ Mode, the V_{DDQ} voltage ramp must conform to the limits in Table 1.

Table 275 V_{DDQ} Ramp Rates

Parameter	Symbol	Max/Min	Value	Units
V_{DDQ} Slew Rate, VRCG Enabled	VDQSR1	Max	20	mV/us
V_{DDQ} Slew Rate, VRCG Disabled	VDQSR2	Max	4.8	mV/us

7.7.2 Data Copy Low Power Function

LPDDR5 device can support a data copy low power function to reduce LPDDR5 IO and core power (IDD4W, IDD4R) consumption by utilizing data pattern repeatability per 8Byte data copy granularity. If LPDDR5 device support the data copy function (MR21 OP[0]= 1_B (WDCFS, WRITE Data Copy Function Supported) and/or MR21 OP[1]= 1_B (RDCFS, READ Data Copy Function Supported)), users may enable the data copy function by MR21 programming (MR21 OP[4]=1_B (WDCFE, WRITE Data Copy Function Enable) and/or MR21 OP[5]=1_B (RDCFE, READ Data Copy Function Enable)). The LPDDR5 Data Copy Low Power function is only valid to normal Write and Read operations with the same AC timing conditions. Read latency may increase per Read Data Copy Function enabled (MR21 OP[5]=1_B). Refer to LPDDR5 Read latency table.

7.7.2.1 Write Data Copy Function

LPDDR5 Write data copy function is applied to each 8 Byte data granularity per DQ byte, if LPDDR5 device supports the WRITE data copy function (MR21 OP[0]= 1_B (WDCFS, WRITE Data Copy Function Supported)) and the WRITE data copy function is enabled by MR21 programming (MR21 OP[4]=1_B (WDCFE, WRITE Data Copy Function Enable)). Whenever any data pattern is repeated over 8Byte data, only the reference data (Reference Data 0-7 in Figure 198) is transferred through one DQ link (DQ0 for a lower DQ byte, DQ8 for an upper DQ byte) per DQ byte from a host to a LPDDR5 device. LPDDR5 device recovers the original 8Byte data by copying the reference data to other 7 DQ data during LPDDR5 device's internal Write operation. Figure 198 illustrates data copy granularity and reference data configuration per X16 channel (BL32).

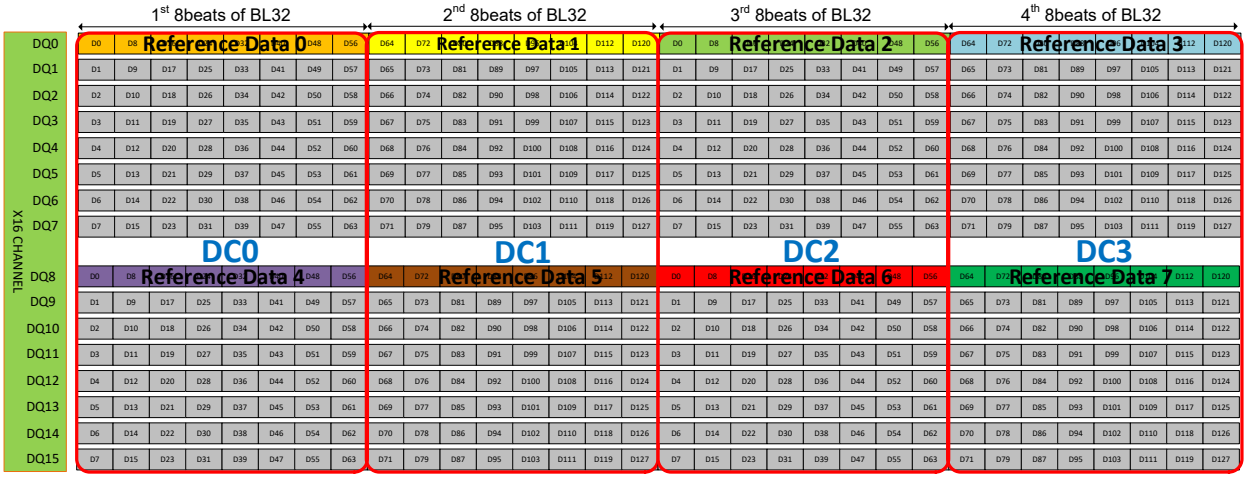

Figure 198 - Data copy granularity and reference data configuration in BL32

Each reference data can be any data pattern (i.e. 256 data patterns) and there is no dependence between reference data. Refer to Table 276 about reference data S[7:0] bit mapping details.

Table 276 - Reference data S[7:0] bit mapping

DQ Byte	Burst Cycle Number (Beat of Burst)							
	1	2	3	4	5	6	7	8
Reference Data S[7:0] through DQ0	S0	S1	S2	S3	S4	S5	S6	S7
Original 64bit Data								
DQ0	D0	D8	D16	D24	D32	D40	D48	D56
DQ1	D1	D9	D17	D25	D33	D41	D49	D57
DQ2	D2	D10	D18	D26	D34	D42	D50	D58
DQ3	D3	D11	D19	D27	D35	D43	D51	D59
DQ4	D4	D12	D20	D28	D36	D44	D52	D60
DQ5	D5	D13	D21	D29	D37	D45	D53	D61
DQ6	D6	D14	D22	D30	D38	D46	D54	D62
DQ7	D7	D15	D23	D31	D39	D47	D55	D63

NOTE 1 Data Copy hit occurs when the following bitwise condition is met:
(D0=D1=D2=D3=D4=D5=D6=D7) AND (D8=D9=D10=D11=D12=D13=D14=D15) AND
(D16=D17=D18=D19=D20=D21=D22=D23) AND
(D24=D25=D26=D27=D28=D29=D30=D31) AND
(D32=D33=D34=D35=D36=D37=D38=D39) AND
(D40=D41=D42=D43=D44=D45=D46=D47) AND
(D48=D49=D50=D51=D52=D53=D54=D55) AND
(D56=D57=D58=D59=D60=D61=D62=D63)

NOTE 2 S0 is copied to D0, D1, D2, D3, D4, D5, D6 and D7

NOTE 3 S1 is copied to D8, D9, D10, D11, D12, D13, D14 and D15

NOTE 4 S2 is copied to D16, D17, D18, D19, D20, D21, D22 and D23

NOTE 5 S3 is copied to D24, D25, D26, D27, D28, D29, D30 and D31

NOTE 6 S4 is copied to D32, D33, D34, D35, D36, D37, D38 and D39

NOTE 7 S5 is copied to D40, D41, D42, D43, D44, D45, D46 and D47

NOTE 8 S6 is copied to D48, D49, D50, D51, D52, D53, D54 and D55

NOTE 9 S7 is copied to D56, D57, D58, D59, D60, D61, D62 and D63

CAS command delivers Write data copy hit or miss information to LPDDR5 devices with 4bit operands (DC0 – DC3, refer to LPDDR5 command truth table).

Table 277 - Write data copy hit or miss operands (DC0 – DC3) of CAS command

Write Data Copy Operand of CAS Command	Description	Notes
DC0	0B: Write data copy miss (normal Write) 1B: Write data copy hit (reference byte through DQ0 and DQ8)	1
DC1	0B: Write data copy miss (normal Write) 1B: Write data copy hit (reference byte through DQ0 and DQ8)	2
DC2	0B: Write data copy miss (normal Write) 1B: Write data copy hit (reference byte through DQ0 and DQ8)	3, 5
DC3	0B: Write data copy miss (normal Write) 1B: Write data copy hit (reference byte through DQ0 and DQ8)	4, 5

NOTE 1 DC0 is applied to the first 8 beats of BL16 or BL32.
NOTE 2 DC1 is applied to the second 8 beats of BL16 or BL32.
NOTE 3 DC2 is applied to the third 8 beats of BL32.
NOTE 4 DC3 is applied to the fourth 8 beats of BL32.
NOTE 5 DC2 and DC3 are “don’t care” in case of BL16.

Figure 199 shows an example of Write Data Copy function timing diagram in case of a CAS command with DC0=1B, DC1=0B, DC2=1B and DC3=0B.

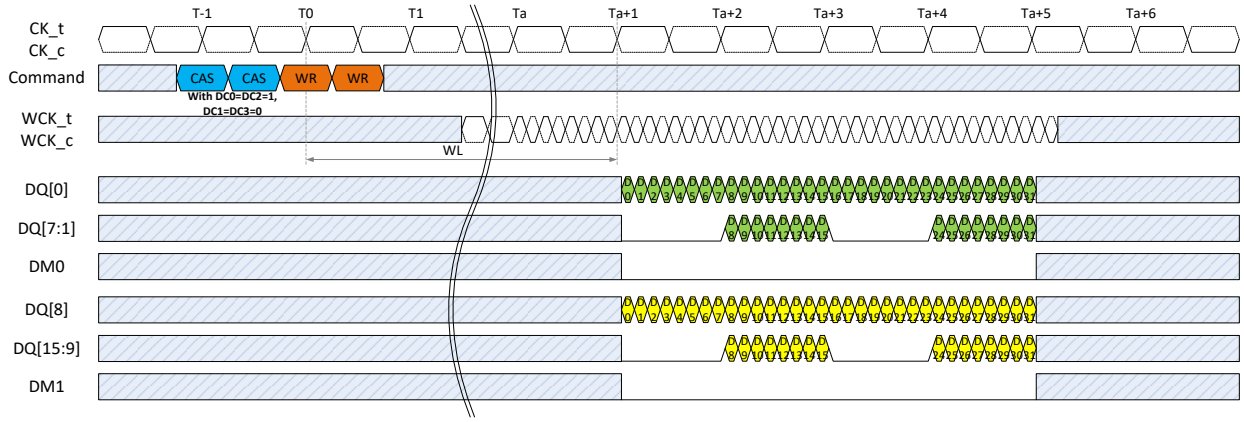

NOTE 1 WCK:CK = 4:1, BL32, ODT on
NOTE 2 CAS command with DC0=1B, DC1=0B, DC2=1B and DC3=0B

Figure 199 - Example of Write Data Copy Function Timing Diagram

7.7.2.2 Read Data Copy Function

LPDDR5 Read data copy function is applied to each 8 Byte data granularity per DQ byte, if LPDDR5 device supports the READ data copy function (MR21 OP[1]= 1_B (RDCFS, READ Data Copy Function Supported)) and the READ data copy function is enabled by MR21 programming (MR21 OP[5]=1_B (RDCFE, READ Data Copy Function Enable)). LPDDR5 device may include an internal data comparator logic to determine any data pattern repeatability per 8Byte read data during Read operations. If any data pattern repeatability over 8Byte read data is found, LPDDR5 device returns a reference data S[7:0] through one DQ link (DQ0 for a lower DQ byte, DQ8 for an upper DQ byte) per DQ byte and a Read data copy hit or miss flag bit through a DM pin (DM0 for a lower DQ byte, DM1 for an upper DQ byte) to a host system. Read reference data S[7:0] bit mapping is same as Write data copy operation. (Refer to Table 276). LPDDR5 device shall drive other DQs (DQ[7:1] in a lower DQ byte, DQ[15:9] in an upper DQ byte) in 8 Byte data granularity to LOW in case of the Read data copy hit.

Table 278 - Read data copy hit or miss flag bits in a DM pin

DM Burst Data	Description	Notes
1st beat of DM burst data (DM-0)	0B: Read data copy miss (normal Read) 1B: Read data copy hit (reference byte through DQ0 (or DQ8))	1
9th beat of DM burst data (DM-8)	0B: Read data copy miss (normal Read) 1B: Read data copy hit (reference byte through DQ0 (or DQ8))	2
17th beat of DM burst data (DM-16)	0B: Read data copy miss (normal Read) 1B: Read data copy hit (reference byte through DQ0 (or DQ8))	3
25th beat of DM burst data (DM-24)	0B: Read data copy miss (normal Read) 1B: Read data copy hit (reference byte through DQ0 (or DQ8))	4

NOTE 1 DM-0 is a read data copy hit or miss flag bit applied to the first 8 beats of BL16 or BL32.
NOTE 2 DM-8 is a read data copy hit or miss flag bit applied to the second 8 beats of BL16 or BL32.
NOTE 3 DM-16 is a read data copy hit or miss flag bit applied to the third 8 beats of BL32 only.
NOTE 4 DM-24 is a read data copy hit or miss flag bit applied to the fourth 8 beats of BL32 only.

Figure 200 shows an example of Read Data Copy function timing diagram in case of mixed read data copy hit and miss.

Figure 3

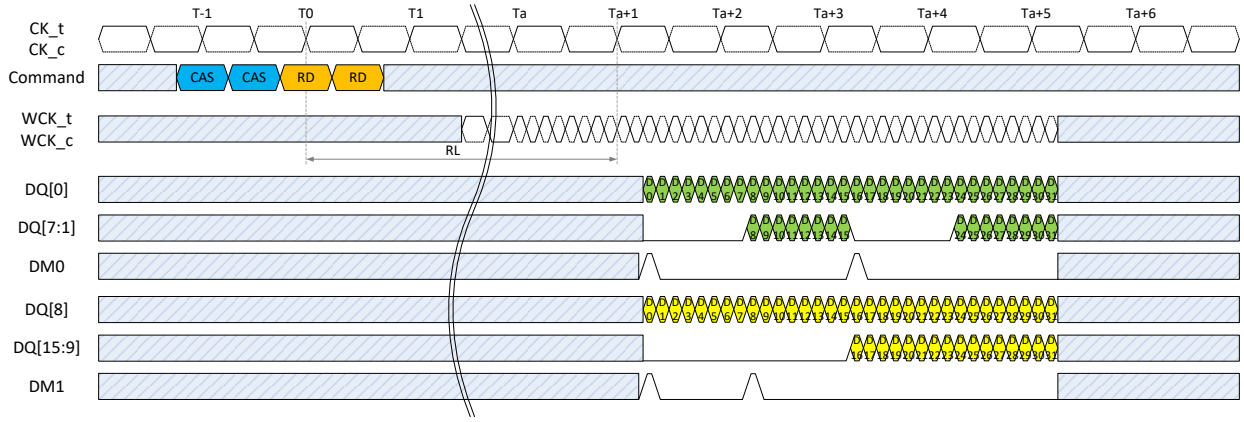

NOTE 1 WCK:CK = 4:1, BL32, ODT on.
NOTE 2 DM0 for a lower byte: DM0-0= 1B, DM0-8= 0B, DM0-16= 1B, DM0-24= 0B
NOTE 3 DM1 for an upper byte: DM1-0= 1B, DM1-8= 1B, DM1-16= 0B, DM1-24= 0B

Figure 200 - Example of Read Data Copy Function Timing Diagram

7.7.2.3 Read Data Copy Function with Read DBI Enable

LPDDR5 device supports a Data Bus Inversion function in Read operations. The Read data copy hit/miss flag bits can share a DM pin signal with Read DBI bits in case of both functions enabled. If LPDDR5 device supports the READ data copy function (MR21 OP[1]= 1_B (RDCFS, READ Data Copy Function Supported)) and the READ data copy function is enabled by MR21 programming (MR21 OP[5]=1_B (RDCFE, READ Data Copy Function Enable)) and the Read DBI function is enabled by MR3 programming (MR3 OP[6]=1_B, DBI-RD, Read-DBI_DC Enable), LPDDR5 device drives other DQs (DQ[7:1] in a lower DQ byte, DQ[15:9] in an upper DQ byte) to specific data pattern at 1st and 9th beat of data burst (BL16) or at 1st, 9th, 17th and 25th beat of data burst data (BL32). When the number of "1" data bits within other DQs at 1st and 9th beat of data burst (BL16) or at 1st, 9th, 17th and 25th beat of data burst data (BL32), is greater than four, the corresponding DM bit is the Read data copy flag bit. Otherwise, the corresponding DM bit is the Read DBI bit.

7.7.3 Write X operation

An LPDDR5 memory system may reduce power in write operation of repeated data pattern utilizing Write X function. Write X function is an optional feature in LPDDR5 device, and the LPDDR5 controller is able to detect its supportability by mode register read of MR21 OP[2]. If the MRR result of MR21 OP[2]=1_B, the controller can enable Write X function by setting MR21 OP[6] = 1_B by MRW command. A write X command consists of a CAS command and following write command with column address. The CAS command with DC0=0, DC1=0, DC2=0, DC3=0, WRX=H, WXSA=H or L and WXSB=H or L with following write command initiates write X command with either 1's or 0's data write at corresponding column address. Programming the Write X Steering bits controls the pattern at a byte level control via the command.

- WXSA [CA5:F1] = H informs the SDRAM that the first byte pattern DQ[7:0] will be all 1's, while programming WXSA [CA5:F1]=L informs the SDRAM that the first byte pattern DQ[7:0] pattern will be all 0's.

- WXSB [CA6:F1] = H informs the SDRAM that the second byte pattern DQ[15:8] will be all 1's, while programming WXSB[CA6:F1]=L informs the SDRAM that the second byte pattern DQ[15:8] pattern will be all 0's.

If MR setting is MR21 OP[2]=1_B and MR21 OP[7]=0_B, SDRAM supports that 'Data to be written is "0" only'. In this case WXSA[CA5:F1] and WXSB[CA6:F1] should be fixed as 'Low'.

Table 279 - CAS command with write X (zero) enable bits.

Command	CS	CA0	CA1	CA2	CA3	CA4	CA5	CA6	CK
CAS	H	L	L	H	H	V	V	V	R1
	X	DC0=0	DC1=0	DC2=0	DC3=0	WRX	WXSA	WXSB	F1

The write X enable bits in Table 1 are non-sticky bits. After CAS command with write X enabled is issued, followed write commands perform write X. WXSA[CA5:F1] & WXSB[CA6:F1] are only valid when WRX=H. Byte-mode case, WXSA[CA5:F1] is only valid to a lower byte device and WXSB[CA6:F1] is only valid to the upper byte device. If MR21 OP[7]=0_B (Data to be written "0" only), WXSA[CA5:F1] & WXSB[CA6:F1] should be "Low".

The Write X function can be operated to an activated bank without WCK2CK sync and data input to SDRAM's DQ pins. In this case the input of WCK_t/c is required to be valid and compliment level after tWR2WCK from Write command. For example, WCK_t to High and WCK_c to low and vice versa. Additionally, the toggling input to WCK_t/c is possible too, and the toggling input does not transfer to SDRAM internal WCK clock tree at non WCK2CK sync state, hence the power consumption is smaller than Write operation during WCK2CK sync state. Figure 1 shows write X operation without WCK clock. Although write X operation does not require WCK or DQ operation, SDRAM internal write operation occurs at same timing as normal write operation. Therefore, all core timing parameters of write command in Section 7.4.7.1 Write Timing also applies to write X command.

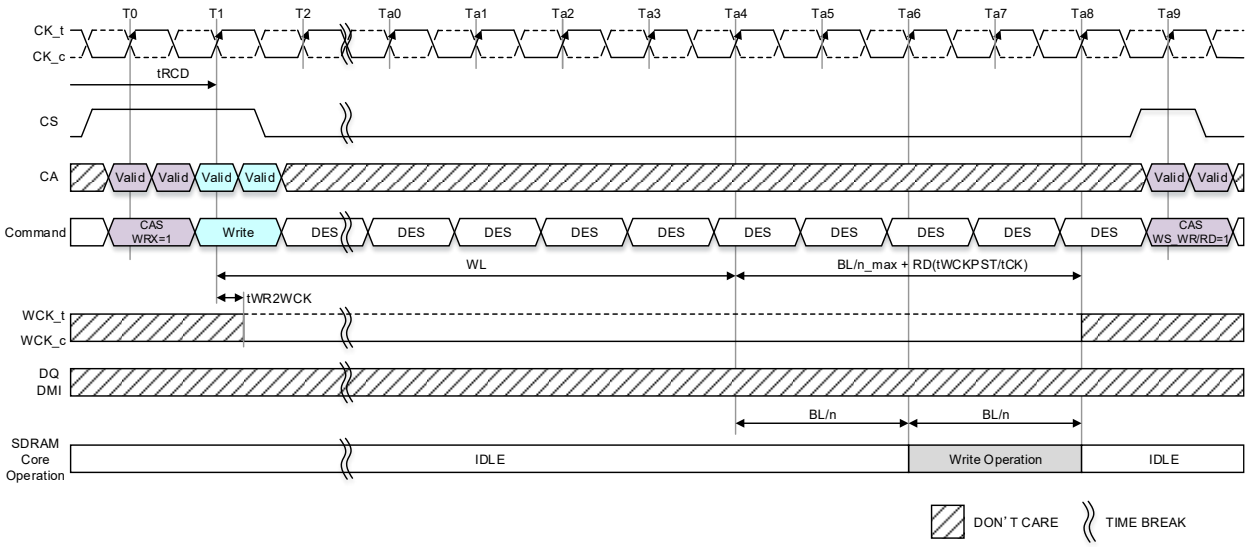

NOTE 1 CAS Sync command is inhibited until Ta8.
NOTE 2 CAS Sync command can be issued after Ta9 (Ta9 is included).
NOTE 3 tWCKPST=2.5nWCK, RD(tWCKPST/tCK)=0.
NOTE 4. The CAS Sync command input timing is applied the same timing as Write command without Write X, see Section 7.2.2 WCK2CK SYNC Off Timing Definition.

Figure 201 - Write X timing at Sync off: BG Mode, CKR (WCK vs. CK) = 4:1, BL=16

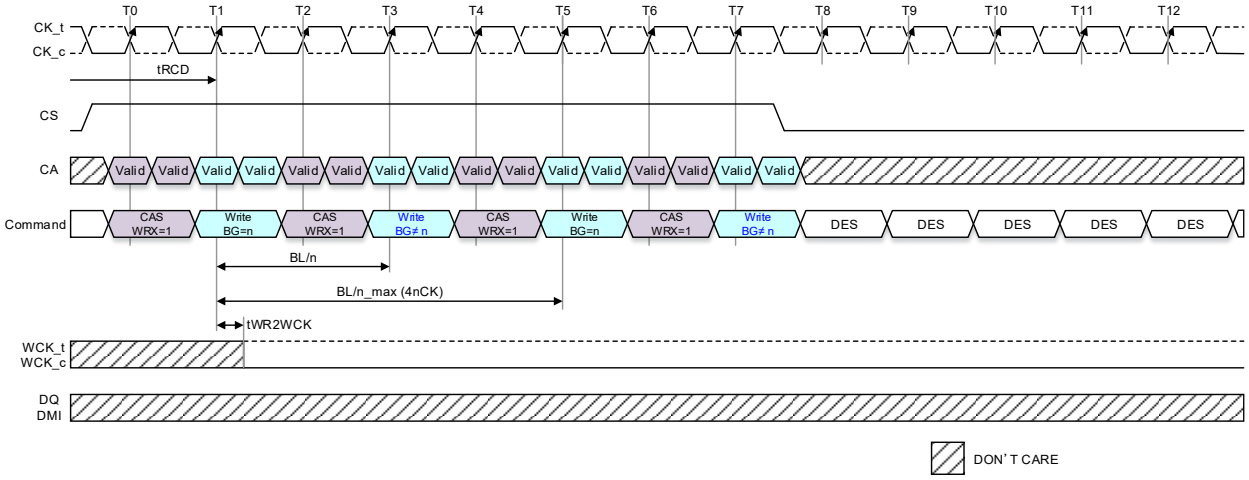

NOTE 1 Write w/ write X timing follows Write w/o Write X timing.

Figure 202 - Consecutive Write and Write X timing at Sync off: BG Mode, CKR (WCK vs. CK) = 4:1, BL=16

An LPDDR5 SDRAM controller is allowed issue Write X command in WCK2CK sync'd state. However, SDRAM is not able to turn off WCK buffer in this case, reducing the power saving amount of write X. Like normal write command, write X command extends WCK2CK sync state, as shown in Figure 3.

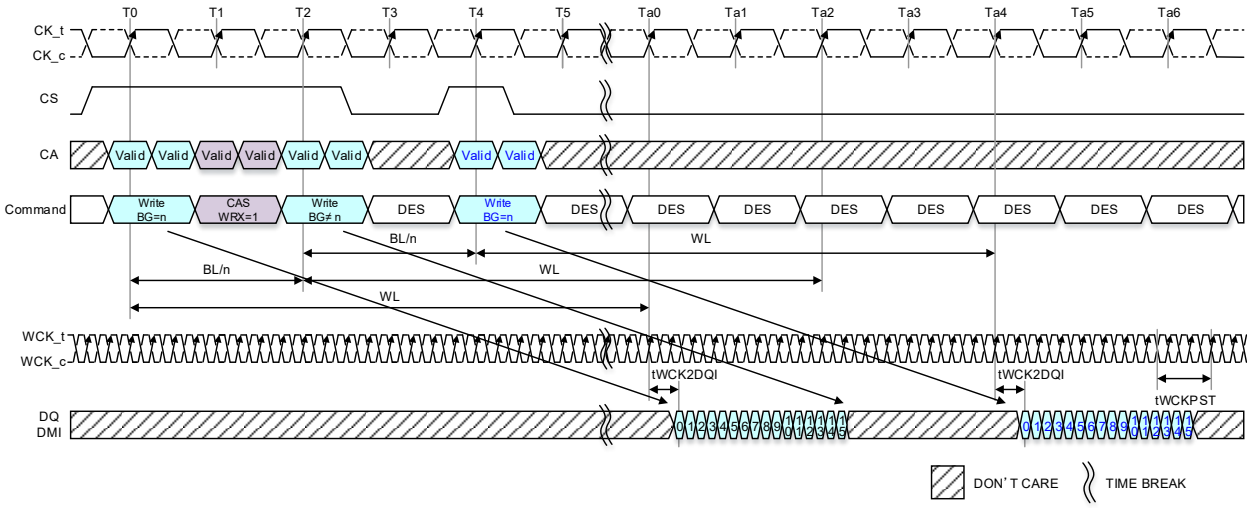

NOTE 1 tWCK2CK is 0ps in this instance.
NOTE 2 Write w/ Write X timing follows Write w/o Write X timing.

Figure 203 - Consecutive Write and Write X timing at Sync: BG Mode, CKR (WCK vs. CK) = 4:1, BL=16

The WCK2CK SYNC Off Timing Definition applied Write X command. Figure 4 shows a case where WCK2CK synchronization is continued by the Write X command, and Figure 5 shows a case where it does not continue.

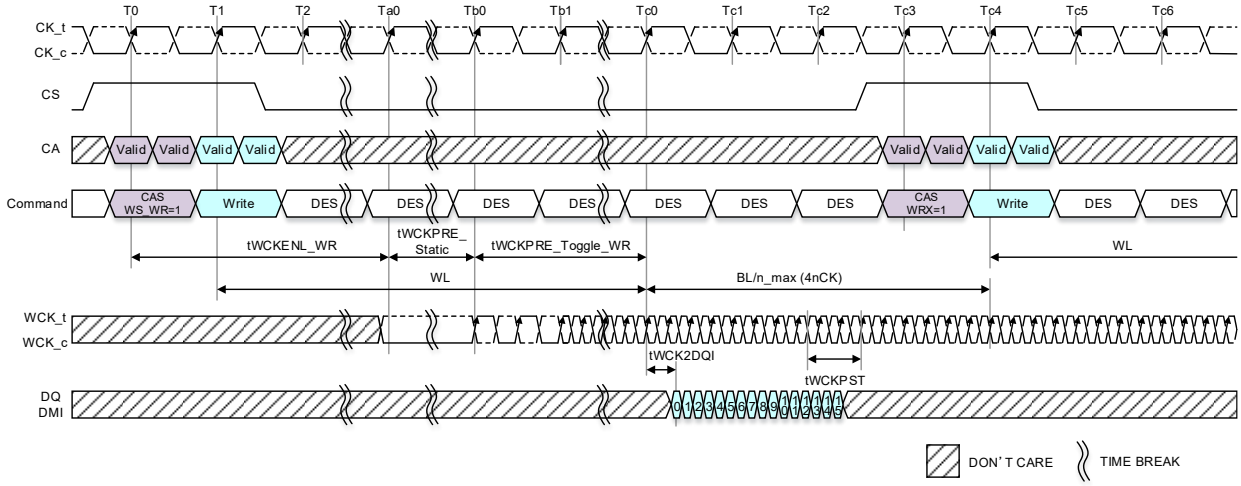

NOTE 1 tWCK2CK is 0ps in this instance.
NOTE 2 The end of both WL and tWCKPRE_Toggle_WR are the same timing in this instance.
NOTE 3 Write w/ write X command can be issued until Tc4.
NOTE 4 tWCKPST=2.5nWCK, RD(tWCKPST/tCK)=0.

Figure 204 - Write w/ write X issuing timing at Sync state.

The issuing CAS_WRX command timing is respected the constraint of CAS Sync command after WCK2CK sync is expired in order to the command scheduling becomes easy. For example, issuing CAS_WRX command is inhibited on Tc4 in Figure5.

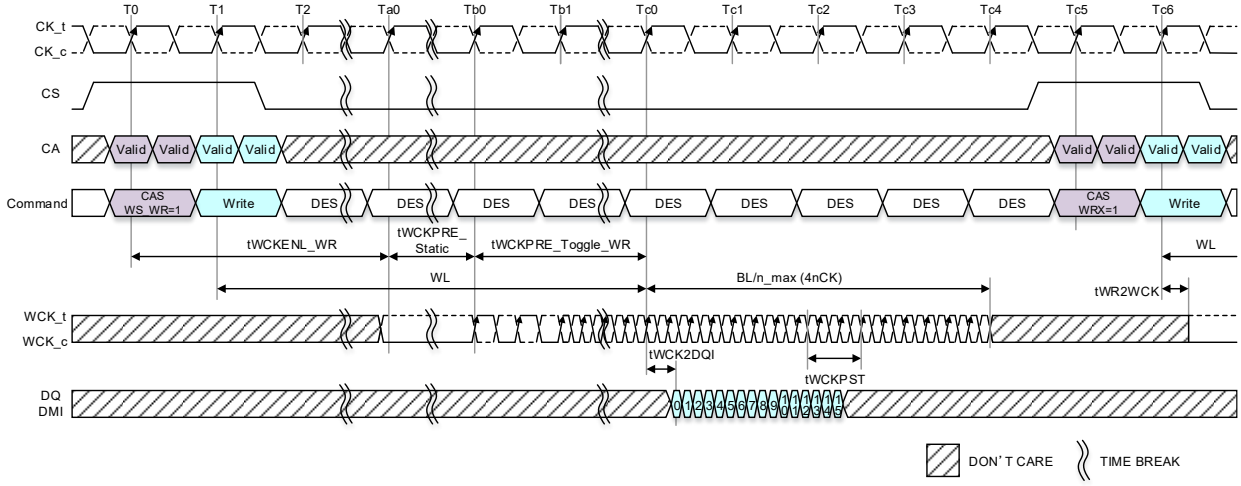

NOTE 1 tWCK2CK is 0ps in this instance.
NOTE 2 The end of both WL and tWCKPRE_Toggle_WR are the same timing in this instance.
NOTE 3 WCK2CK sync is expired on Tc4.
NOTE 4 CAS_WRX command is inhibited on Tc4.
NOTE 5 CAS WRX command can be issued after Tc5 (Tc5 is included).
NOTE 4 tWCKPST=2.5nWCK, RD(tWCKPST/tCK)=0.

Figure 205 – CAS_WRX Command timing after WCK2CK sync state is expired

Table 280 – AC Timing

Parameter	Symbol	Min/Max	Value	Unit	Notes
Valid WCK Requirement after Write w/ Write X	tWR2WCK	Max	1.25	ns	-

7.7.4 Post Package Repair (PPR)

The repair process is irrevocable so great care should be exercised when using. At Post Package Repair, the fail row address to fix is required to designate using 8B mode addressing. With PPR, LPDDR5 SDRAM can correct 1 Row per bank. When PPR is executed in the BG or 16B mode, refer to the address mapping in Bank Architecture section. The controller should prevent unintended PPR mode entry and repair.
The availability of PPR for each bank [7:0] is readable via MR29 OP[7:0] respectively.

Table 281 - MR29 OP[7:0] Register Information

Function	Register Type	Operand	Data	Notes
PPR Resource Bank 0	Read-only	MR29 OP[0]	0_B: PPR Resource is not available 1_B: PPR Resource is available	
PPR Resource Bank 1		MR29 OP[1]	0_B: PPR Resource is not available 1_B: PPR Resource is available	
PPR Resource Bank 2		MR29 OP[2]	0_B: PPR Resource is not available 1_B: PPR Resource is available	
PPR Resource Bank 3		MR29 OP[3]	0_B: PPR Resource is not available 1_B: PPR Resource is available	
PPR Resource Bank 4		MR29 OP[4]	0_B: PPR Resource is not available 1_B: PPR Resource is available	
PPR Resource Bank 5		MR29 OP[5]	0_B: PPR Resource is not available 1_B: PPR Resource is available	
PPR Resource Bank 6		MR29 OP[6]	0_B: PPR Resource is not available 1_B: PPR Resource is available	
PPR Resource Bank 7		MR29 OP[7]	0_B: PPR Resource is not available 1_B: PPR Resource is available	

The "bank address" is specified by CA[0:2] during the Activate command and is valid for a single PPR sequence. Valid combination for 8B mode includes CA[0:2]=000_B, 001_B, 010_B, 011_B, 100_B, 101_B, 110_B and 111_B. And CA[3] is required to be V (valid).
The BG/Bank address mapping on PPR is shown in Table 2.

Table 282 - Combination of PPR Resource for CA Input

CA Input at ACT command				8B Mode	BG Mode		16B Mode
CA0	CA1	CA2	CA3	Bank	BG	Bank	Bank
0	0	0	V	0	0,2	0	0,8
1	0	0	V	1	0,2	1	1,9
0	1	0	V	2	0,2	2	2,10
1	1	0	V	3	0,2	3	3,11
0	0	1	V	4	1,3	0	4,12
1	0	1	V	5	1,3	1	5,13
0	1	1	V	6	1,3	2	6,14
1	1	1	V	7	1,3	3	7,15

7.7.4.1 Guard Key Protection

Entry into PPR is protected through a sequential MRS guard key to prevent unintentional PPR programming. The PPR guard key requires a sequence of four MRW commands to be issued immediately after entering PPR, as shown in Figure 1. The guard key sequence is entered in the specified order as stated below, and shown inTable 3. Any interruptions of the guard key sequence by other MRW/MRR commands or non-MR commands such as ACT, WR, RD, REFab and REFpb are not allowed. Since interruption of the guard key entry is not allowed, if the guard key is not entered in the required order or is interrupted by other commands intentionally, it should be asserted Reset_n, and then to do the reset and initialization procedure immediately. If the guard key is not entered in the required order or an incorrect guard key is entered unintentionally, the SDRAM will capture the wrong guard key and PPR mode will not execute. Even in this case, asserting Reset_n, and then to do the reset and initialization procedure is required at the end of PPR procedure. The SDRAM does not provide an error indication if an incorrect PPR guard key sequence is entered.

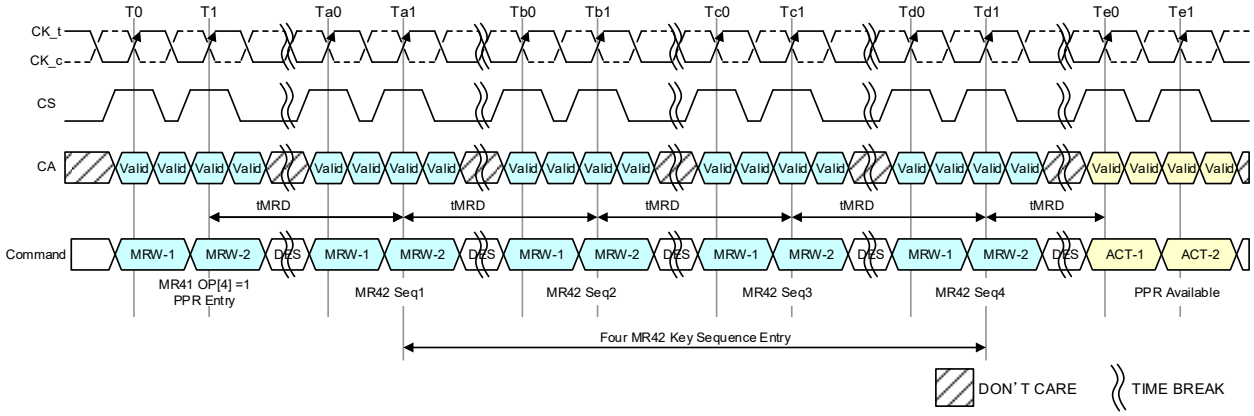

NOTE 1 Only DES commands are allowed during tMRD.

Figure 206 - Guard Key Timing Diagram

Table 283 - Guard Key Encoding for MR42

Command	OP7	OP6	OP5	OP4	OP3	OP2	OP1	OP0
MR42 Seq1	1	1	0	0	1	1	1	1
MR42 Seq2	0	1	1	1	0	0	1	1
MR42 Seq3	1	0	1	1	1	0	1	1
MR42 Seq4	0	0	1	1	1	0	1	1

7.7.4.2 PPR Fail Row Address Repair

Once PPR mode is entered by setting MR41 OP[4]=1 (enable) and issuing the guard key sequence, the ACT command is used to transmit the bank and row address of the row to be repaired in SDRAM. The specific steps of PPR are as follows.

The following is procedure of PPR.

1. Before entering PPR mode, All banks are required to be Precharged and idle state and WCK Sync. is expired, or WCK Sync. is off intentionally.
2. Enable PPR using MR41 OP[4]=1 and wait tMRD.
3. Issue the guard key as four consecutive MR42 OP[7:0] MRW commands each with a unique address field OP[7:0]. Each MRW command should be spaced by tMRD.
4. Issue an ACT command with the Bank Group, Bank and Row fail address.
5. Wait tPGM to allow the SDRAM to repair target Row Address internally then issue PRE.
6. Wait tPGM_Exit after PRE which allows the SDRAM to recognize repaired Row address RAn.
7. Exit PPR by setting MR41 OP[4]=0 and wait tPGMPST.
8. Assert Reset_n, and then to do the reset and initialization procedure.
9. In more than one fail address repair case, Repeat Step 2 to 8

After entering PPR mode, do not deviate from the above-mentioned procedure. It is prohibited to insert any other command except DES between step 3 and step 8. The PPR procedure is required to be performed at a clock frequency of 800MHz or less, the frequency for PPR mode is defined as tCKPGM.
Once PPR mode is exited, the controller can verify that the target row was repaired by writing data into the target row and reading it back after reset and initialization procedure.

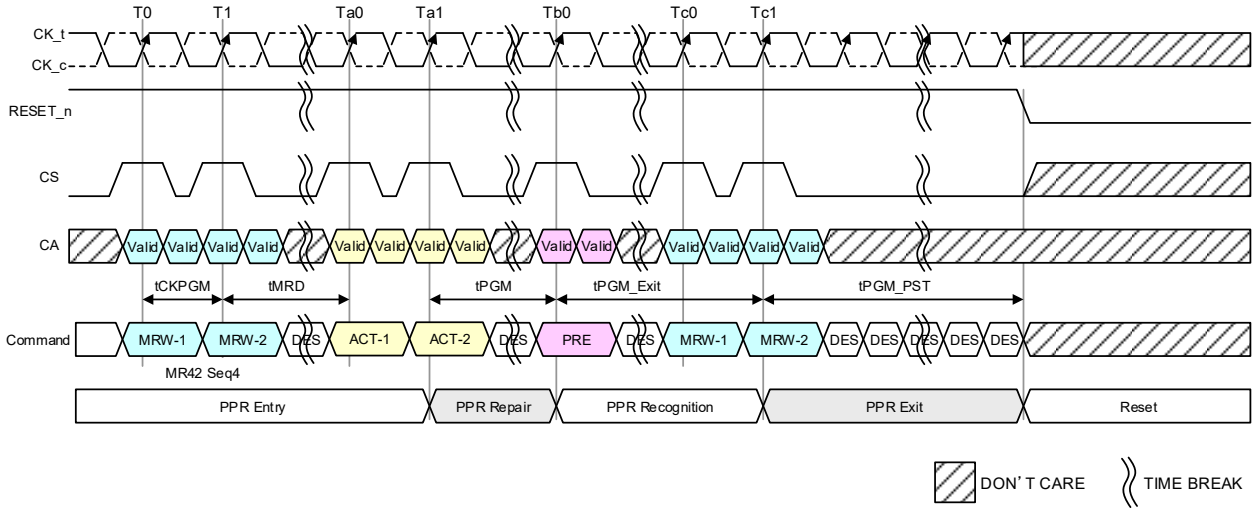

NOTE 1 With one PPR command, only one row can be repaired at one time per die.
NOTE 2 RESET is required at the end of every PPR procedure.
NOTE 3 During PPR, memory contents are not refreshed and may be lost.
NOTE 4 Assert Reset_n: Refer to the Reset, Power-up, Initialization and Power-off Procedure section for details.

Figure 207 - PPR Timing

Table 284 - PPR Timing Parameters

Parameter	Symbol	min	max	Unit	Notes
PPR Programming Clock	tCKPGM	1.25	200	ns	
PPR Programming Time	tPGM	2000	-	ms	
PPR Exit Time	tPGM Exit	15	-	ns	
New Address Setting time	tPGMPST	500	-	us	

7.7.5 Refresh Management Command

7.7.5.1 Refresh Management Command Definition

Periods of high LPDDR5 SDRAM activity may require additional REFRESH commands to protect the integrity of the SDRAM data. LPDDR5 devices that require additional activity based refreshes include support for an Activation-based refresh management (RFM) command. The LPDRAM will indicate the requirement for additional Refresh Management (RFM) by setting read only MR27 opcode bit 0 (Table 5). OP[0]=0 indicates no additional refresh management is needed beyond the requirement in the Refresh section of the specification. OP[0]=1 indicates additional LPDRAM refresh management is required.

A suggested implementation of Refresh Management by the controller monitors ACT commands issued per bank to the LPDRAM. This activity can be monitored as a Rolling Accumulated ACT (RAA) count. Each ACT command will increment the RAA count by 1 for the individual bank receiving the ACT command.

When the RAA counter reaches a DRAM vendor-specified Initial Management Threshold (RAAIMT), which is set by the DRAM vendor in the read only MR27 opcode bits 5:1 (Table 5), additional LPDRAM refresh management may be required. Executing the Refresh Management (RFM) command allows additional time for the LPDRAM to manage refresh internally. The RFM operation can be initiated to all banks on the LPDRAM with the RFMab command, or to a single bank with the RFMpb command.

The RFM command bits are the same as the REF command, except for CA3. If the Refresh Management Required bit is “0”, (MR27 OP[0]=0), the state of CA3 will be ignored. If the Refresh Management Required bit is “1”, (MR27 OP[0]=1), CA3=”L” executes the REF command and CA3=”H” executes either a RFMab command if CA6=”H” or a RFMpb command if CA6=”L”.

TABLE 285 LPDDR5 REFRESH COMMAND WITH RFM

CMD	Bank Org	SDR CS Pin	DDR Command/Address Pins							CK Edge
			CA0	CA1	CA2	CA3	CA4	CA5	CA6	
Refresh	Any	H	L	L	L	H	H	H	L	R1
	BG	X	BA0	BA1	BG0	RFM	SB0	V	AB	F1
	16B				BA2					
	8B						V	SB1		

Notes:
1. CA3 F1 edge is 'V' when RFM is not required, but becomes 'RFM' when read-only MR27 OP[0]=1b.
2. Issuing the RFMpb or RFMab command allows the LPDDR5 to use the command period for additional Refresh Management.

3. CA4 F1 edge is 'V' when RFM is not required, or when RFMSBC is set to '1'. SB0 is always treated as 'V' for REFpb and REFab commands.
4. CA5 F1 edge is 'V' when RFM is not required, or when RFMSBC is set to '1' or '2'. SB1 is always treated as 'V' for REFpb and REFab commands.

TABLE 286 REFRESH MANAGEMENT PARAMETERS

Refresh Requirements	Symbol	2Gb	3Gb	4Gb	6Gb	8Gb	12Gb	16Gb	24Gb	32Gb	Units
Refresh Management Sycle time (All Bank)	tRFMab	TBD	TBD	TBD	TBD	210	280	280	TBD	TBD	ns
Refresh Management Sycle time (per Bank)	tRFMpb	TBD	TBD	TBD	TBD	170	190	190	TBD	TBD	ns

When an RFM command is issued to the LPDRAM, the RAA counter in any bank receiving the command can be decremented. The decrease in RAA count for an RFM command is determined by the RAAIMT multiplier value RAADEC, set by MR57 OP[1:0], as shown in Table 3. Issuing a RFMab command allows the RAA count in all banks to be decremented by the RAAIMT multiplied by the RAADEC value. Issuing an RFMpb command with BA[1:0] and either BA[2] or BG[0] allows the RAA count only for the bank specified by BA[1:0] and either BA[2] or BG[0] (depending on bank organization) to be decremented by RAAIMT * RAADEC.

The RAA counter can only be decremented to a minimum RAA value of 0. No negative RAA value, or "pull-in" of RFM commands, is allowed.

RFM commands are allowed to accumulate or "postpone", but the RAA counter shall never exceed the vendor specified RAA Maximum Management Threshold (RAAMMT), which is determined by multiplying the RAAIMT value by the RAAMULT value set by the DRAM vendor in read only MR27 OP[7:6] (Table 5). If the RAA counter for a bank reaches RAAMMT, no additional ACT commands are allowed to that LPDRAM bank until one or more REF or RFM commands have been issued to reduce the RAA counter below the maximum value.

RFM command scheduling shall meet the same minimum separation requirements as those for the REF command.

A RFM command does not replace the requirement for the controller to issue periodic REF commands to the LPDRAM. The RFM commands are supplemental time for the LPDRAM to manage refresh internally. Issuing a REF command allows the RAA counter to be decremented by RAAIMT for the bank or banks being refreshed. Hence, any periodic REF command issued to the LPDRAM allows the RAA counter of the banks being refreshed to be decremented by the RAAIMT value. This would nominally occur once every tREFIe. Issuing a REFab command allows the RAA count in all banks to be decremented. Issuing a REFpb command with a bank address allows the RAA count only with that bank address to be decremented. No decrement to the RAA count values

is allowed for entering/exiting Self Refresh. The per bank count values before Self Refresh is entered will be the same upon Self Refresh exit.

Issuing an RFM command also allows decrementing of the RAA counter.

Devices which require Refresh Management may not require RFM at every refresh rate multiplier. The Refresh Management Threshold value RFMTH defines a refresh interval (tREFIe) above which Refresh Management is required. RFMTH is determined by the equation:

RFMTH = RAAIMT * tRC absolute min

Maximum interval between two REFab without RFM requirement is calculated as RFM divide by tREFIe. Interval multiplier is RFMTH/tREFIe. When RFMTH is longer than Max. Interval between two REFab defined in Table 209 “REFRESH Command Timing Constraints,” no RFM command is required even using max pull-in and postpone.

Operation at any refresh rate slower (i.e. longer tREFIe) than that indicated by RFMTH requires RFM to ensure integrity of data stored in the LPDRAM. Operation at the tREFIe indicated by RFMTH, or operation at any higher refresh rate (i.e. shorter tREFIe) is exempt from RFM requirements regardless of any RAA count value.

A controller Refresh Management implementation may also monitor ACT commands issued on a sub-bank basis when allowed by the LPDRAM. Because monitoring by sub-banks does not change the management threshold values, this can reduce the performance impact by reducing the number of required RFM commands when row accesses are distributed among sub-banks. LPDRAM support for sub-bank monitoring, and the number of sub-banks supported, is indicated by MR57 OP[3:2] RFMSB. If sub-bank monitoring is implemented by the memory controller, the corresponding MR57 OP[5:4] RFMSBC bits shall be set as shown in Table 7. It is illegal to program RFMSBC to a value higher than indicated by RFMSB.

When RFMSB is greater than 1 the monitoring of ACT commands may be performed by dividing the row address space equally among the indicated number of regions. An example where RFMSB=2 is shown in Figure 1. In this example, the controller would be permitted to implement two RAA counters for each LPDRAM bank, one each for regions 0 and 1. In this implementation the requirements for RFM commands are determined for each region separately, based on the same read-only LPDRAM parameters RAAIMT, RAAMULT, and RAADEC as a per-bank implementation. Decrementing of the RAA counter for each sub-bank region follows the same rules as decrementing the RAA counter on a per-bank basis. When RAA is tracked on a per-sub-bank basis, RFM commands must include the appropriate SB0 and SB1 bits to inform the DRAM which sub-bank requires the additional Refresh Management. When an RFMab command is issued and sub-bank management is enabled (i.e. MR57 OP[5:4] = 01b or 10b), the command will apply to the sub-bank indicated by the SB0 and SB1 bit states for each of the eight Refresh banks. That is, the RAA counter may be decremented for the same sub-bank region in each of the eight Refresh banks for an RFMab command. If the RAA counter for any sub-bank region within a bank reaches RAAMMT, no additional ACT commands are allowed to that LPDRAM bank until one or more REF or RFM commands have been issued to reduce the RAA counter below the maximum value for all sub-bank regions. Some examples of sub-bank RAA count behavior are shown in Table 7.

Monitoring of the sub-bank regions is optional for the controller, and the sub-bank regions may be combined, i.e. if an LPDRAM device supports 2 regions as in Figure 1 the controller could choose to regions 0 and regions 1. In this case there would be two RAA monitors per bank, one tracking addresses 00 – 7F and another tracking addresses 80 - FF. Since sub-bank implementation is optional the RFM specification is also met if all sub-bank regions are tracked together as a single bank.

Sub Bank usage and RAA counter configuration for each bank organization.

BG mode and 16B mode

Number of RAA counter andSB0 / SB1 are defined as Table 287.

TABLE 287 BG MODE AND 16B MODE SB0/1 DEFINITION

RAA Counter in SoC	RAA Granularity per Ch per Rank	RFM Operation	Refresh Command Operands
One RAA Counter per two banks	1 of 8	Two banks RFM operation	BA0, BA1, BG0: Valid SB0, SB1: high or low
One RAA Counter per one bank	1 of 16	One bank RFM operation	BA0, BA1, BG0, SB0 : Valid SB1: high or low

TABLE 288 BG MODE AND 16B MODE BANK ADDRESS AND SUB-BANK RELATIONSHIP WHEN MR57 OP[5:4]=01B

BG mode Active operation	BA0	BA1	BG0	BG1
16B mode Active operation	BA0	BA1	BA2	BA3
RFM operation	BA0	BA1	BG0	SB0

8Bank mode

Number of RAA counter andSB0 / SB1 are defined as Table 289.

TABLE 289 8B MODE SB0/1 DEFINITION

RAA Counter in SoC	RAA Granularity per Ch per Rank	RFM Operation	Refresh Command Operands
One RAA Counter per one bank	1 of 8	One banks RFM operation	BA0, BA1, BG0: Valid SB0, SB1: high or low
One RAA Counter per sub-bank	1 of 16	One sub-bank RFM operation	BA0, BA1, BG0, SB1: Valid SB0: high or low

SB1 addressing table (x16 mode)

Memory Density	2Gb	3Gb	4Gb	6Gb	8Gb	12Gb	16Gb	24Gb	32Gb
Configuration	16Mb x 16DQ x 8 banks	24Mb x 16DQ x 8 banks	32Mb x 16DQ x 8 banks	48Mb x 16DQ x 8 banks	64Mb x 16DQ x 8 banks	96Mb x 16DQ x 8 banks	128Mb x 16DQ x 8 banks	192Mb x 16DQ x 8 banks	256Mb x 16DQ x 8 banks
Bank Address	BA0 - BA2	BA0 - BA2	BA0 - BA2	BA0 - BA2	BA0 - BA2	BA0 - BA2	BA0 - BA2	BA0 - BA2	BA0 - BA2
Row Addresses	R0 - R12	R0-R13 (R12=0 when R13=1)	R0- R13	R0-R14 (R13=0 when R14=1)	R0- R14	R0-R15 (R14=0 when R15=1)	R0- R15	R0-R16 (R15=0 when R16=1)	R0 - R16
SB1=0	R12=0	R13/R12 /R11 =000, 001, 010	R13=0	R14/R12 /R12 =000, 001, 010	R14=0	R15/R14 /R13 =000, 001, 010	R15=0	R16/R15 /R14 =000, 001, 010	R16=0
SB1=1	R12=1	R13/R12 /R11 =011, 100, 101	R13=1	R14/R13 /R12 =011, 100, 101	R14=1	R15/R14 /R13 =011, 100, 101	R15=1	R16/R15 /R14 =011, 100, 101	R16=1

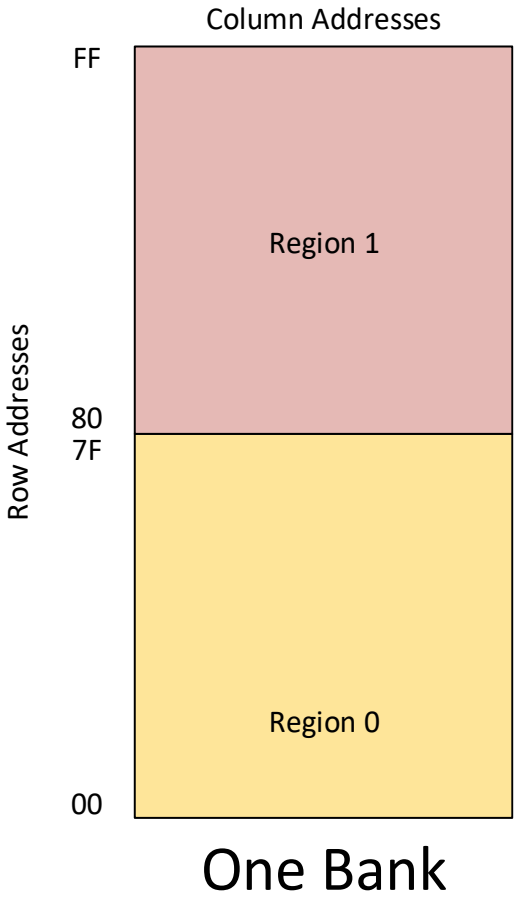

FIGURE 208 SUB-BANK ADDRESSING EXAMPLE

TABLE 290 8B MODE SUB-BANK ADDRESSING TABLE FOR 2 REGION

x16				
Density	Region	RA range min	RA range max	Note
2Gb	0	0_H	FFF_H	
	1	1000_H	$1FFF_H$	
3Gb	0	0_H	$17FF_H$	
	1	1800_H	$2FFF_H$	
4Gb	0	0_H	$1FFF_H$	
	1	2000_H	$3FFF_H$	
6Gb	0	0_H	$2FFF_H$	
	1	3000_H	$5FFF_H$	
8Gb	0	0_H	$3FFF_H$	
	1	4000_H	$7FFF_H$	
12Gb	0	0_H	$5FFF_H$	
	1	6000_H	$BFFF_H$	
16Gb	0	0_H	$7FFF_H$	
	1	8000_H	$FFFF_H$	
24Gb	0	0_H	$BFFF_H$	
	1	$C000_H$	$17FFF_H$	
32Gb	0	0_H	$FFFF_H$	
	1	10000_H	$1FFFF_H$	
X8				
Density	Region	RA range min	RA range max	Note
2Gb	0	0_H	$1FFF_H$	
	1	2000_H	$3FFF_H$	
3Gb	0	0_H	$2FFF_H$	
	1	3000_H	$5FFF_H$	
4Gb	0	0_H	$3FFF_H$	
	1	4000_H	$7FFF_H$	
6Gb	0	0_H	$5FFF_H$	
	1	6000_H	$BFFF_H$	
8Gb	0	0_H	$7FFF_H$	
	1	8000_H	$FFFF_H$	
12Gb	0	0_H	$BFFF_H$	
	1	$C000_H$	$17FFF_H$	
16Gb	0	0_H	$FFFF_H$	
	1	10000_H	$1FFFF_H$	
24Gb	0	0_H	$17FFF_H$	
	1	18000_H	$2FFFF_H$	
32Gb	0	0_H	$1FFFF_H$	
	1	20000_H	$3FFFF_H$	

TABLE 291 MR57 DEVICE FEATURE (MA[5:0]=39H)

OP[7]	OP[6]	OP[5]	OP[4]	OP[3]	OP[2]	OP[1]	OP[0]
RFU		RFMSBC		RFMSB		RAADEC	

TABLE 292 MR57 DEFINITIONS

Function	Register Type	Operand	Data	Notes
RAADEC (RAA Count Decrement per RFM Command)	Read	OP[1:0]	00b: RAAIMT 01b: RAAIMT*1.5 10b: RAAIMT*2 11b: RAAIMT*4	
RFMSB (RFM Allowable Sub-banks)	Read	OP[3:2]	00b: 1 01b: 2 10b: RFU 11b: RFU	
RFMSBC (RFM Sub-bank Counters Implemented)	Write	OP[5:4]	00b: 1 (default) 01b: 2 10b: RFU 11b: RFU	

TABLE 293 MR27 DEVICE FEATURE (MA[5:0]=1BH)

OP[7]	OP[6]	OP[5]	OP[4]	OP[3]	OP[2]	OP[1]	OP[0]
RAAMULT		RAAIMT					RFM

TABLE 294 MR27 DEFINITIONS

Function	Register Type	Operand	Data	Notes
RFM (RFM Required)	Read	OP[0]	0b: RFM not required 1b: RFM required	1
RAAIMT (Rolling Accumulated ACT Initial Management Threshold)	Read	OP[5:1]	00000b: Invalid 00001b: 8 00010b: 16 .... (step +8) 11110b: 240 11111b: 248	1
RAAMULT (Rolling Accumulated ACT Multiplier)	Read	OP[7:6]	00: 2X 01: 4X 10: 6X 11b: 8X	1, 2
Notes 1. Vendor programmed, no need to periodical read. Notes 2. RAAMMT = RAAMULT * RAAIMT				

Refresh Management Examples

Following are some operation examples to aid in understanding of the Refresh Management function. Values shown are hypothetical and may not represent values from any actual LPDDR5 SDRAM device now or in the future.

TABLE 295 RFM OPERATION EXAMPLES (ONE BANK, ONE SUB-BANK REGION)

Device-Specific RFM Requirements					Current Device State		Operating Requirements
RAAIMT	RAAMULT	RAADEC	RFMSB	RFMTH	tREFIe	RAA	
160	4x	2x	1	9600ns (160*60ns)	7.8us	120	No additional commands required, RAA<RAAIMT and tREFIe≤RFMTH
160	4x	2x	1	9600ns	7.8us	500	No additional commands required, tREFIe≤RFMTH
160	4x	2x	1	9600ns	15.6us	120	No additional commands required, RAA<RAAIMT
160	4x	2x	1	9600ns	15.6us	500	No additional commands required immediately since RAA<RAAMMT, but RAA is approaching RAAMMT so one or more RFM commands to this bank are recommended to prevent interruption of operation
160	4x	2x	1	9600ns	15.6us	640	RFM or REF command to this bank required before any activate command to this bank is legal, since RAA=RAAMMT. Issuing one RFMpb or RFMab command will reduce RAA to 320 since RAADEC=2x. Issuing one REFpb or REFab command will reduce RAA to 480.
120	4x	1.5x	1	7200ns	7.8us	480	RFM or REF command to this bank required before any activate command to this bank is legal, since RAA=RAAMMT. Issuing one RFMpb or RFMab command will reduce RAA to 300 since RAADEC=1.5x. Issuing one REFpb or REFab command will reduce RAA to 360.

TABLE 296 RFM OPERATION EXAMPLES (ONE BANK, VARIOUS SUB-BANK CONFIGURATIONS)

Device-Specific RFM Requirements					Current Device State		Operating Requirements
RAAIMT	RAAMULT	RAADEC	RFMSB / RFMSBC	RFMTH	tREFIe	RAA	
160	4x	2x	2/2	9600ns	15.6us	Region 0 = 640	RFM or REF command to this bank, region 0, is required before any activate command to this bank is legal, since RAA=RAAMMT in at least one region. Issuing one RFMpb or RFMab command with SB0=0 will reduce RAA for region 0 to 320 since RAADEC=2x. Issuing one REFpb or REFab command will reduce RAA for region 0 to 480. Region 1 RAA will remain at 0.
						Region 1 = 0	
160	4x	2x	2/2	9600ns	15.6us	Region 0 = 320	No additional commands required immediately since RAA<RAAMMT for both regions. Issuing two RFMpb or RFMab commands (one to each region of this bank) would reduce RAA to 0 for both regions. Issuing one REFpb or REFab command will reduce RAA to 160 for both regions.
						Region 1 = 320	

7.7.6 Decision Feedback Equalization (DFE)

LPDDR5 support very high data rate. To compensate channel characteristics, equalization technique helps Rx margin. DFE can be enabled when WCK is higher than 800MHz.

LPDDR5 provide Decision Feedback Equalization (DFE) capability for DQ Rx. LPDDR5 DFE is enabled by MR24 OP[2:0] for lower byte and MR24 OP[6:4] for upper byte. LPDDR5 supports only 1 tap negative feedback. DFE quantity can be controlled by MR24 OP[2:0] for lower byte and MR24 OP[6:4] for upper byte with seven steps. LPDDR5 can support different feedback quantity for each byte.

DFE is optional feature.

Before write data burst operation, LPDDR5 with DFE enabled requires 2UI DQ pre-drive to 0. This pre-drive set precondition of DFE circuits. In case of back to back write, there is no need to add pre-drive.

7.7.6 Decision Feedback Equalization (DFE) (Cont'd)

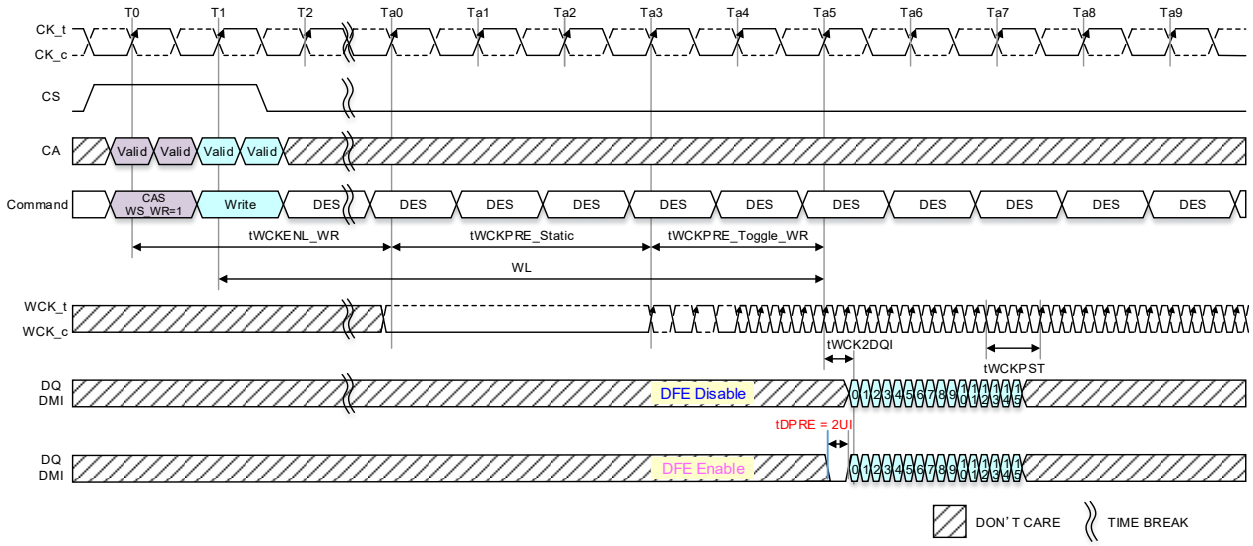

NOTE 1 tWCK2CK is 0ps in this instance.
NOTE 2 The end of both WL and tWCKPRE_Toggle_WR are the same timing in this instance
NOTE 3 Data Rate: 3733Mbps, tWCKPRE _Static: 3nCK, tWCKPRE toggle_WR: 2nCK

Figure 209 — DFE pre-drive requirement

7.7.7 Link ECC

Supporting Link ECC is an optional feature. In addition, DRAMs which support Link ECC need not do so at WCK frequencies less than or equal to 1600MHz. If supported by the DRAM, Link ECC may then be enabled or disabled by the controller as required by the system configuration, operating speed, or other requirements.

During each Write burst when Link ECC is enabled, ECC will be generated and checked across the 128 Data bits within a specified portion of the burst. ECC will be separately generated and checked across the 16 DMI bits within the same specified portion of the burst. In the case of the data ECC, the DBI encoded data must be used, as Masked Writes can modify the data in a way which changes the ECC.

This ECC (6 bits on DMI + 9 bits on the data) would be received by the DRAM on the RDQS_t pin along with Write Data on the DQ pins and DBI/DM on the DMI pin as illustrated in the Write command diagram below.

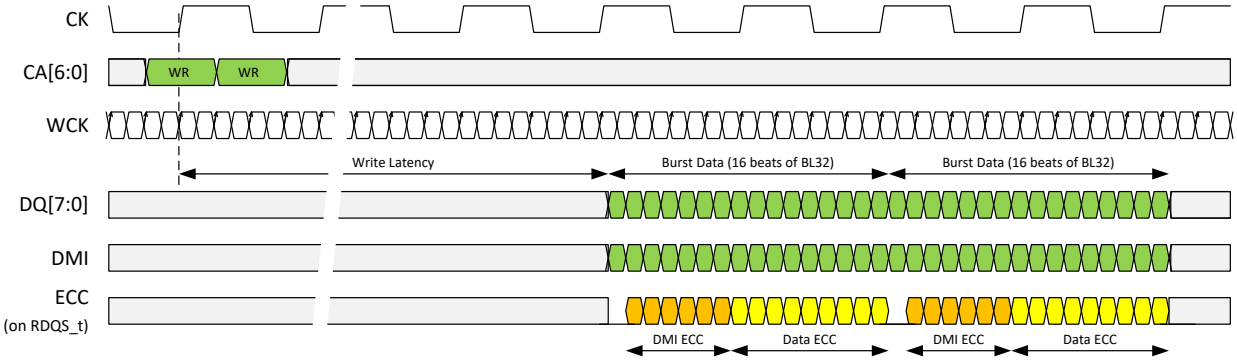

Figure 210 - Write command showing link ECC transfer

During each Read burst when Link ECC is enabled, ECC will be generated across the 128 Data bits in a specified portion of the burst. Since Link ECC and Read DBI are mutually exclusive, there is no need to calculate ECC across the DBI bits in the Read case. CAS (B3) is required to be “0” at read command when Read Link ECC is enabled.

This ECC (9 bits on the data only) would be transmitted from the DRAM on the DMI pin along with Read Data on the DQ pins as illustrated in the Read Command diagram below. Link ECC and the Read Data Copy function are mutually exclusive, since both drive information on DMI, and would conflict if both functions were enabled simultaneously.

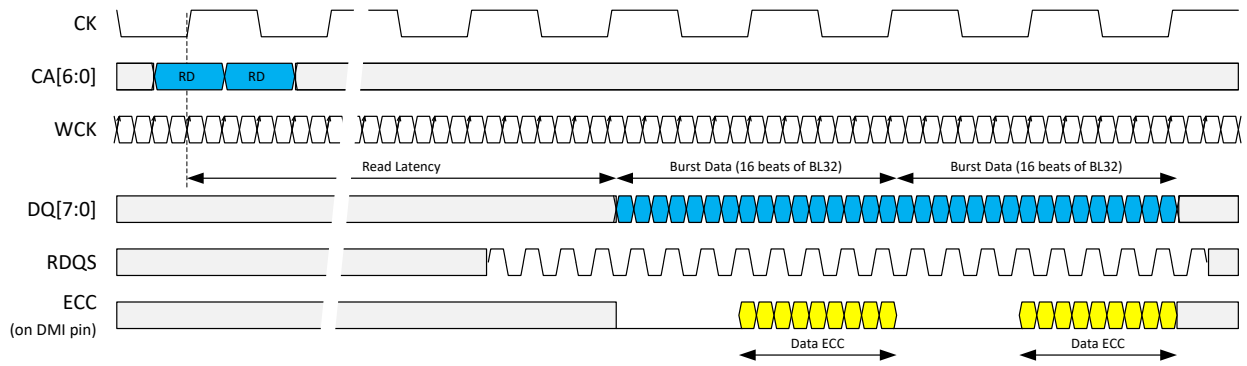

Figure 211 - Read command showing Link ECC transfer

A BL16 burst consists of 16 consecutive data beats; a BL32 burst consists of 32 consecutive beats. The ECC is calculated on 16-beat quantities of Data or DMI, so a BL32 burst has 2 separate sets of ECCs per burst per byte, one on the first 16 beats and another on the next 16 beats. A BL16 burst has only 1 set per burst per byte. A set of ECCs refers to all 15 ECC bits on a Write or the 9 ECC bits on a Read.

Link ECC is also calculated on each byte of the interface independently. So BL16 on a full 16-bit DRAM channel includes 2 sets of ECCs, and BL32 on a full DRAM channel includes a total of 4 sets.

The ECC check matrix for the LPDDR5 Data ECC is defined below.

Table 297 - ECC Check Matrix for Data

Beat	0								1								2								3							
DQ Pin	0	1	2	3	4	5	6	7	0	1	2	3	4	5	6	7	0	1	2	3	4	5	6	7	0	1	2	3	4	5	6	7
S0	0	1	0	1	0	1	0	1	0	1	0	1	0	1	0	1	0	1	0	1	0	1	0	1	0	1	0	1	0	1	0	1
S1	0	0	1	1	0	0	1	1	0	0	1	1	0	0	1	1	0	0	1	1	0	0	1	1	0	0	1	1	0	0	1	1
S2	0	0	0	0	1	1	1	1	0	0	0	0	1	1	1	1	0	0	0	0	1	1	1	1	0	0	0	0	1	1	1	1
S3	1	1	1	1	1	1	1	1	0	0	0	0	0	0	0	0	1	1	1	1	1	1	1	1	0	0	0	0	0	0	0	0
S4	1	1	1	1	1	1	1	1	0	0	0	0	0	0	0	0	0	0	0	0	0	0	0	0	1	1	1	1	1	1	1	1
S5	0	0	0	0	0	0	0	0	1	1	1	1	1	1	1	1	1	1	1	1	1	1	1	1	0	0	0	0	0	0	0	0
S6	0	0	0	0	0	0	0	0	1	1	1	1	1	1	1	1	0	0	0	0	0	0	0	0	1	1	1	1	1	1	1	1
S7	0	0	0	0	0	0	0	0	1	1	1	1	1	1	1	1	0	0	0	0	0	0	0	0	1	1	1	1	1	1	1	1
S8	1	1	1	1	1	1	1	1	1	1	1	1	1	1	1	1	1	1	1	1	1	1	1	1	1	1	1	1	1	1	1	1

Beat	4								5							
DQ Pin	0	1	2	3	4	5	6	7	0	1	2	3	4	5	6	7
S0	0	1	0	1	0	1	0	1	0	1	0	1	0	1	0	1
S1	0	0	1	1	0	0	1	1	0	0	1	1	0	0	1	1
S2	0	0	0	0	1	1	1	1	0	0	0	0	1	1	1	1
S3	0	0	0	0	0	0	0	0	1	1	1	1	1	1	1	1
S4	1	1	1	1	1	1	1	1	0	0	0	0	0	0	0	0
S5	0	0	0	0	0	0	0	0	1	1	1	1	1	1	1	1
S6	0	0	0	0	0	0	0	0	1	1	1	1	1	1	1	1
S7	0	0	0	0	0	0	0	0	1	1	1	1	1	1	1	1
S8	1	1	1	1	1	1	1	1	1	1	1	1	1	1	1	1

Beat	6								7								8								9							
DQ Pin	0	1	2	3	4	5	6	7	0	1	2	3	4	5	6	7	0	1	2	3	4	5	6	7	0	1	2	3	4	5	6	7
S0	0	1	0	1	0	1	0	1	0	1	0	1	0	1	0	1	0	1	0	1	0	1	0	1	0	1	0	1	0	1	0	1
S1	0	0	1	1	0	0	1	1	0	0	1	1	0	0	1	1	0	0	1	1	0	0	1	1	0	0	1	1	0	0	1	1
S2	0	0	0	0	1	1	1	1	0	0	0	0	1	1	1	1	0	0	0	0	1	1	1	1	0	0	0	0	1	1	1	1
S3	1	1	1	1	1	1	1	1	0	0	0	0	0	0	0	0	1	1	1	1	1	1	1	1	0	0	0	0	0	0	0	0
S4	1	1	1	1	1	1	1	1	0	0	0	0	0	0	0	0	0	0	0	0	0	0	0	0	1	1	1	1	1	1	1	1
S5	1	1	1	1	1	1	1	1	0	0	0	0	0	0	0	0	0	0	0	0	0	0	0	0	1	1	1	1	1	1	1	1
S6	0	0	0	0	0	0	0	0	1	1	1	1	1	1	1	1	1	1	1	1	1	1	1	1	0	0	0	0	0	0	0	0
S7	0	0	0	0	0	0	0	0	1	1	1	1	1	1	1	1	0	0	0	0	0	0	0	0	1	1	1	1	1	1	1	1
S8	1	1	1	1	1	1	1	1	1	1	1	1	1	1	1	1	1	1	1	1	1	1	1	1	1	1	1	1	1	1	1	1

Beat	10								11							
DQ Pin	0	1	2	3	4	5	6	7	0	1	2	3	4	5	6	7
S0	0	1	0	1	0	1	0	1	0	1	0	1	0	1	0	1
S1	0	0	1	1	0	0	1	1	0	0	1	1	0	0	1	1
S2	0	0	0	0	1	1	1	1	0	0	0	0	1	1	1	1
S3	0	0	0	0	0	0	0	0	1	1	1	1	1	1	1	1
S4	1	1	1	1	1	1	1	1	0	0	0	0	0	0	0	0
S5	1	1	1	1	1	1	1	1	0	0	0	0	0	0	0	0
S6	0	0	0	0	0	0	0	0	1	1	1	1	1	1	1	1
S7	0	0	0	0	0	0	0	0	1	1	1	1	1	1	1	1
S8	1	1	1	1	1	1	1	1	1	1	1	1	1	1	1	1

Beat	12								13								14								15								Check Bit							
DQ Pin	0	1	2	3	4	5	6	7	0	1	2	3	4	5	6	7	0	1	2	3	4	5	6	7	0	1	2	3	4	5	6	7	C0	C1	C2	C3	C4	C5	C6	C7	C8
S0	0	1	0	1	0	1	0	1	0	1	0	1	0	1	0	1	0	1	0	1	0	1	0	1	0	1	0	1	0	1	0	1	1	0	0	0	0	0	0	0	0
S1	0	0	1	1	0	0	1	1	0	0	1	1	0	0	1	1	0	0	1	1	0	0	1	1	0	0	1	1	0	0	1	1	0	1	0	0	0	0	0	0	0
S2	0	0	0	0	1	1	1	1	0	0	0	0	1	1	1	1	0	0	0	0	1	1	1	1	0	0	0	0	1	1	1	1	0	0	1	0	0	0	0	0	0
S3	1	1	1	1	1	1	1	1	0	0	0	0	0	0	0	0	1	1	1	1	1	1	1	1	0	0	0	0	0	0	0	0	0	0	0	1	0	0	0	0	0
S4	1	1	1	1	1	1	1	1	0	0	0	0	0	0	0	0	0	0	0	0	0	0	0	0	1	1	1	1	1	1	1	1	0	0	0	0	1	0	0	0	0
S5	0	0	0	0	0	0	0	0	1	1	1	1	1	1	1	1	1	1	1	1	1	1	1	1	0	0	0	0	0	0	0	0	0	0	0	0	0	1	0	0	0
S6	1	1	1	1	1	1	1	1	0	0	0	0	0	0	0	0	1	1	1	1	1	1	1	1	0	0	0	0	0	0	0	0	0	0	0	0	0	0	1	0	0
S7	0	0	0	0	0	0	0	0	1	1	1	1	1	1	1	1	0	0	0	0	0	0	0	0	1	1	1	1	1	1	1	1	0	0	0	0	0	0	0	1	0
S8	1	1	1	1	1	1	1	1	1	1	1	1	1	1	1	1	1	1	1	1	1	1	1	1	1	1	1	1	1	1	1	1	1	1	1	1	1	1	1	1	1

Although shown in 3 sections, this should be considered a single matrix of 9 rows by 137 columns. Each column represents one of the data bits or check bits, which are inputs to the

ECC logic. Columns are labeled at the top with a beat number and a DQ bit number (or a check bit number). Each row is labelled at the left with an ECC output bit name (S0-S8).

Each data bit's location within the burst is defined within the table itself (by beat number and DQ bit number). On the upper byte of a 16-bit channel, the DQ bit numbers would be those shown above plus 8. In the 2nd half of a BL32 burst, the beat numbers would be those shown plus 16. All of the check bits appear on the pin which is currently set to Parity. This would be RDQS_t on a Write and DMI on a Read. C0-C8 appear on beats 7-15 of the burst in numerical order (23-31 in the 2nd half of a BL32 burst). That is, C0 is on beat 7, C1 on beat 8 and so on with C8 on beat 15.

During a Write Data Copy command (Write or Masked Write with MR21 OP[4]=1B, and DC[3:0] non-zero in the prior CAS command), only DQ[0] & DQ[8] are driven on the interface during data copy hits. DQ[7:1] & DQ[15:9] should be considered zero during these data copy hits for both the encoding and decoding of ECC. DC0=1 means hit on the 1st 8 beats of a burst, DC1=1 means hit on the 2nd 8 beats, DC2=1 means hit on the 3rd 8 beats of a BL32 burst, and DC3=1 means hit on the 4th 8 beats of a BL32 burst.

On beats 0-6 of a Read burst, the Parity pin shall be held at a logic zero level. On a BL32 Read burst, the Parity pin shall also be held at a logic zero level during beats 16-22. In certain modes, a BL32 burst is separated between beats 0-15 and beats 16-31 of the burst. The beat numbers mentioned apply to the burst associated with a single DRAM command, regardless of whether such separation of the burst occurs.

On beat 0 of a Write burst, the Parity pin shall be held at a logic zero level. On a BL32 write burst, the Parity pin shall also be held at a logic zero level on beat 16. In certain modes, a BL32 burst is separated between beats 0-15 and beats 16-31 of the burst. The beat numbers mentioned apply to the burst associated with a single DRAM command, regardless of whether such separation of the burst occurs.

The DMI bits are covered by a separate ECC. The check matrix for this code is defined below.

Table 298 - ECC Check Matrix for DMI

Bit	M0	M1	M2	M3	M4	M5	M6	M7	M8	M9	M10	M11	M12	M13	M14	M15	C0	C1	C2	C3	C4	C5
S0	0	1	0	1	0	1	0	1	0	1	0	1	0	1	0	1	1	0	0	0	0	0
S1	0	0	1	1	0	0	1	1	0	0	1	1	0	0	1	1	0	1	0	0	0	0
S2	1	1	1	1	0	0	0	0	1	1	1	1	1	1	1	1	0	0	1	0	0	0
S3	1	1	1	1	1	1	1	1	0	0	0	0	1	1	1	1	0	0	0	1	0	0
S4	0	0	0	0	1	1	1	1	1	1	1	1	1	1	1	1	0	0	0	0	1	0
S5	1	1	1	1	1	1	1	1	1	1	1	1	1	1	1	1	1	1	1	1	1	1

The bits labeled M0-M15 appear on the DMI pin on beats 0-15 in numerical order (16-31 in the 2nd half of a BL32 burst). The check bits from this ECC appear on the RDQS_t pin on a write. There is no DMI ECC on a Read. C0-C5 appear on beats 1-6 of the burst in numerical order (17-22 in the 2nd half of a BL32 burst).

Usage of the ECC check matrix for ENCODING:
During encoding, C0-C7 should be 0 for the purpose of calculating S0-S7 but the computed S0-S7 values must be used when calculating S8. The ECC output bits (S0-S8) are then utilized as C0-C8 for the interface and driven on the Parity signal at their previously defined bit locations within the burst.

The DMI ECC check matrix is used in the same fashion.

Usage of the ECC check matrix for DECODING:
During decoding, the ECC inputs to the matrix (C0-C8) are driven with the values which come from the Parity signal of the interface at their previously defined bit locations within the burst. The ECC output bits (S0-S8) are then used as the ECC syndrome for error detection & correction.

The DMI ECC check matrix is used in the same fashion.

Error Detection:
After decoding the data ECC, the resulting ECC syndrome [S8:S0] will be zero in the case of no ECC errors. When the syndrome is non-zero, S8 high indicates a single-bit error (SBE), while S8 low indicates a double-bit error (DBE).

After decoding the DMI ECC, the resulting ECC syndrome [S5:S0] will be zero in the case of no ECC errors. When the syndrome is non-zero, S5 high indicates a SBE, while S5 low indicates a DBE.

Error Correction:
When a single-bit data error is detected, [S2:S0] point directly to the DQ bit in error, and [S7:S3] can be decoded to generate a pointer to the beat in which the error falls, thus pinpointing the bit which is in error. Note that [S7:S3] do not form a direct pointer to the beat number until this decoding is performed. When less than 2 ones appear in [S7:S3], the error is in C0-C8.

When a single-bit DMI error is detected, [S4:S2] can be decoded to generate the 2 MSBs of a pointer to the beat in which the error falls. Concatenating these 2 bits with [S1:S0] (which need no decoding), produces a 4-bit pointer to the beat number where the DMI error occurred. When less than 2 ones appear in [S4:S2], the error is in C0-C5.

Error reporting:
A counter of Single-Bit-Errors and a Double-Bit-Error flag will be maintained on the DRAM, both of which can be read through mode register MR43. The DRAM will also store both syndromes from the most recent single-bit ECC error in MR44 & MR45. Note that both the data syndrome and the DMI syndrome are stored at this time regardless of which one indicates an error. Refer to these mode register definitions for additional detail.

Errors on Write FIFO commands will be ignored: When an ECC error occurs on a Write-FIFO command, the DRAM will not correct the data or DMI bits, it will not increment the SBE_count or set the DBE_flag in MR43, and it will not save the ECC syndromes in MR44 & MR45.

The controller would want to ignore ECC errors in a similar fashion on Read-FIFO and Read DQ Calibration commands. These 2 commands (along with Write-FIFO) are used for interface training, and errors are expected to occur during this training.

ECC & DBI – Order of operations:
When transmitting Write data, the Controller can first perform DBI/DMI encoding of the data (if DBI is enabled). DBI encoding will follow the same rules as on LPDDR4. It can then perform ECC generation on the resulting Data and DMI bits (if ECC is enabled). It is important to perform ECC generation after the DBI encoding, as Masked writes can alter the data during DBI encoding. The modified data is used for calculating the data ECC in all cases. The 6-bit DMI ECC and 9-bit data ECC are both transmitted on the RDQS_t pin and sent at the bit-times previously defined. See the Write Operation diagram below which illustrates the data flow.

When receiving Write data, the DRAM will first perform checking & correction on the DMI ECC. In parallel, it will perform ECC checking and correction on the data itself. Once the DMI is verified, it will proceed to perform DBI decoding of the data. DBI decoding follows the same rules as on LPDDR4. The Data ECC can be checked prior to DBI decoding due to the unique characteristics of the ECC code (the nature of the code is such that inverting an entire beat of the data would not change the ECC). The Write operation diagram illustrates this data flow.

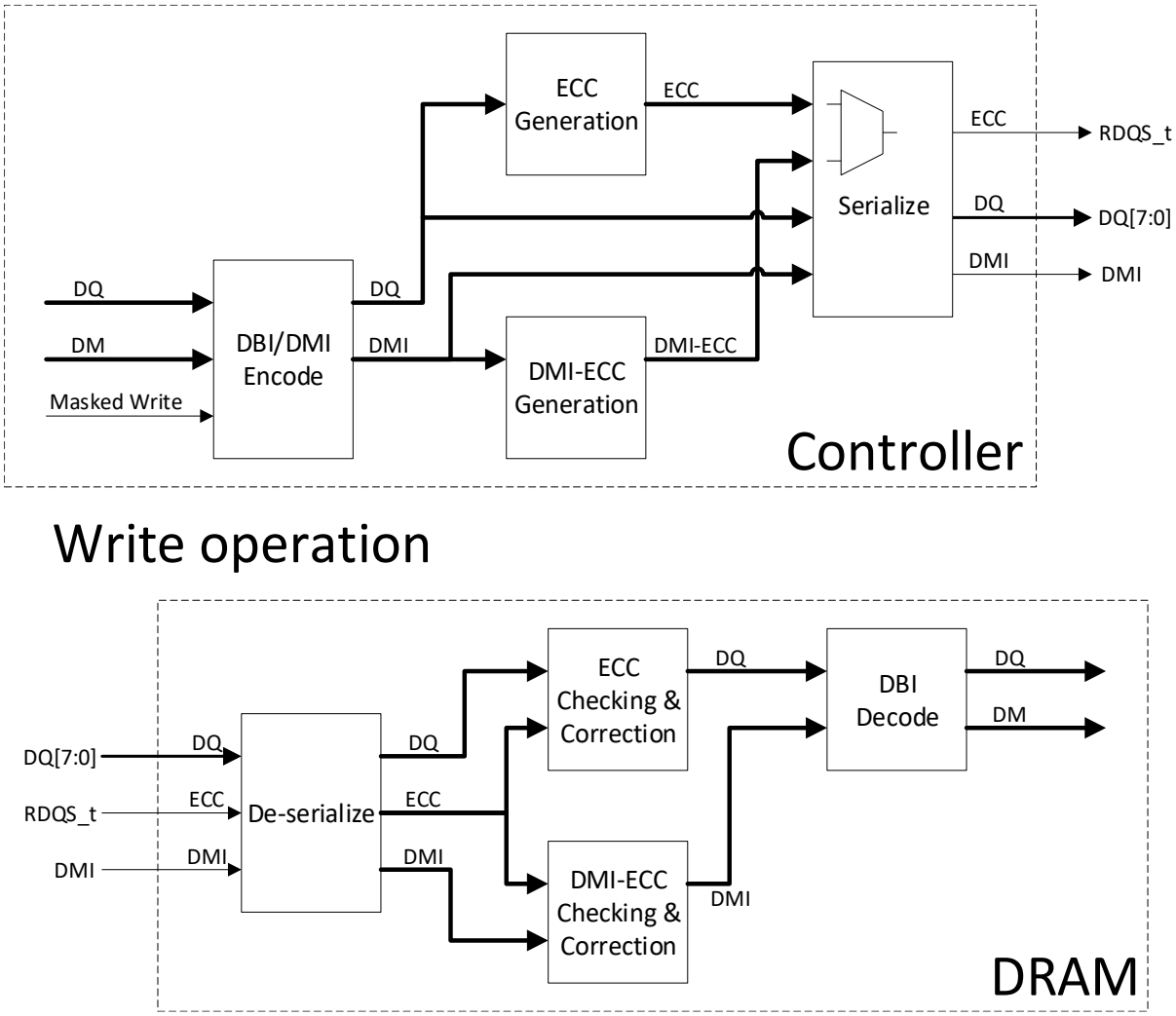

Figure 212 - Data flow on a memory Write operation

When transmitting Read data, the DRAM will either perform DBI encoding (if DBI is enabled), or ECC generation on the data (if ECC is enabled). Which operation is performed will depend on the features enabled. Since Read DBI and Link ECC are mutually exclusive, it never needs to perform both functions, and it never needs to compute or transmit ECC on the DBI bits. The DBI encoding follows the same rules as on LPDDR4. See the Read operation diagram below which illustrates the data flow.

When receiving Read data, the Controller would want to perform either DBI decoding (if DBI is enabled), or ECC checking & correction (if ECC is enabled), depending on the features enabled. DBI decoding follows the same rules as on LPDDR4. The Read operation diagram illustrates this data flow.

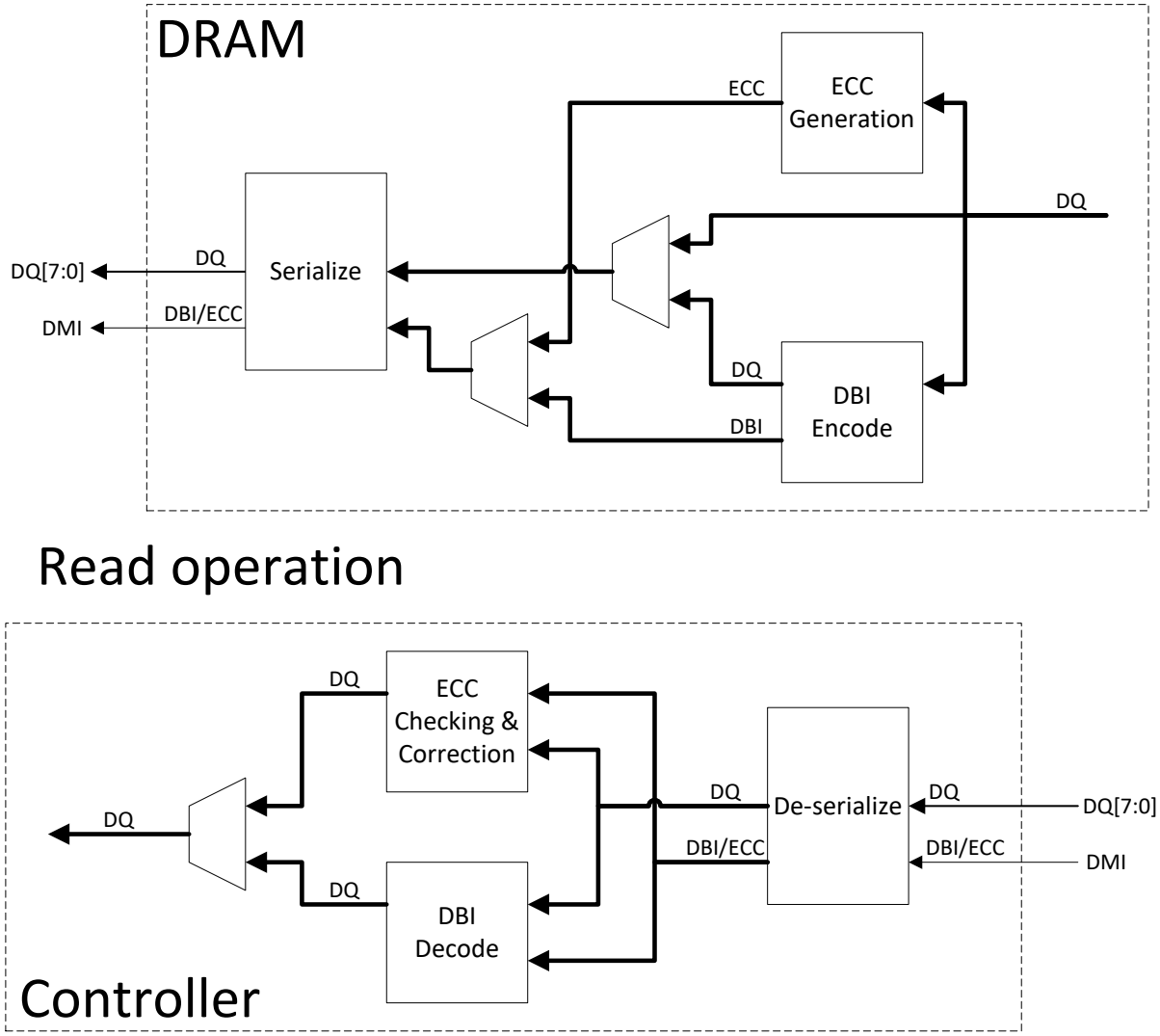

Figure 213 - Data flow on a memory Read operation

Link Error Reporting Overview:
The DRAM keeps a count of single-bit interface error occurrences detected and corrected by the link ECC. A SBE occurrence is a 16b burst in which one or more SBEs are detected. It also sets double bit error flag if one or more double-bit interface errors have been detected by ECC. Since ECC checking always happens at the receiving end of the link, the DRAM is only detecting ECC errors on Write or Masked Write commands; errors on Read commands must be detected by the controller.

The controller can check to see if the DRAM has detected any errors by periodically reading MR43. The action of reading this register clears the SBE_count and DBE_flag. If any errors have been detected, the controller can optionally proceed to obtain the syndromes from the **most recent** single-bit ECC error by reading MR44 & MR45. This action would similarly clear the syndromes as each of these mode registers is read. The syndromes would primarily be used for debugging interface problems during system development; they have limited usefulness in a production system (except during failure analysis of field returns).

7.7.8 Single-ended mode for Clock, Write Clock and RDQS

LPDDR5 SDRAM supports the function of single-ended mode for Clock, Write Clock and Strobe independently to reduce power consumption during low frequency operation. The data rate is required to be equal or less than 1600Mbps and ODT and NT ODT states for CK, CA, WCK, RDQS, DQ and DMI are required to be unterminated during Single-ended mode for Clock, Write Clock and/or RDQS.

Entering and exiting single-ended mode for Clock, Write Clock and RDQS is controlled by the following MR setting.

- MR1 OP[3]: CK mode
- MR20 OP[1:0]: RDQS (Read DQS)
- MR20 OP[3:2] : WCK mode

Single-ended mode for RDQS affects to the following commands.

- Read
- Mode Register Read
- Read DQ Training
- Read FIFO
- RDQS toggle mode
- Enhanced RDQS training mode

The allowable combinations for CK_t/c, WCK_t/c and RDQS_t/c are shown in **Table 299**. The remaining combinations are inhibited.

Table 299 - Allowable combination among CK_t/c, WCK_t/c and RDQS_t/c

CK_t	CK_c	WCK_t	WCK_c	RDQS_t	RDQS_c
Enable	Enable	Enable	Enable	Enable	Enable
Enable	Disable	Enable	Enable	Enable	Enable
		Enable	Disable	Enable	Disable
		Disable	Enable	Disable	Enable
		Enable	Disable	Disable	Disable

7.7.8.1 Relationship among CK, WCK and RDQS during Single-ended mode

The timing of WCK_t/c and RDQS_t/C is defined as follows.

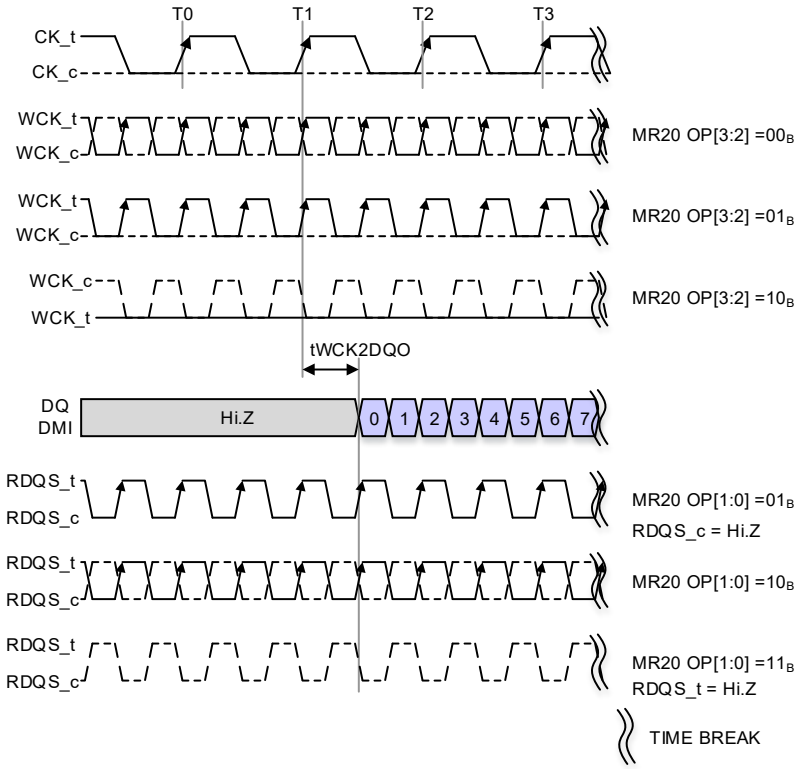

NOTE 1 tWCK2CK is 0ps in this instance.
NOTE 2 tDQSQ is 0ps in this instance.
NOTE 3 WCK clocking generates RDQS_t and RDQS_c.
NOTE 4 When MR20 OP[3:2]= 01_B, WCK_t is used as WCK timing, and WCK_c should be maintained at a valid logic level.
NOTE 5 When MR20 OP[3:2]= 10_B, WCK_cis used as WCK timing, and WCK_t should be maintained at a valid logic level.
NOTE 6 When MR20 OP[1:0]= 01_B, RDQS_t is used as RDQS timing, and RDQS_c should be Hi-Z state.
NOTE 7 When MR20 OP[1:0]= 11_B, RDQS_c is used as RDQS timing, and RDQS_t should be Hi-Z state.
NOTE 8 When MR20 OP[3:2]= 01_B, WCK_t polarity is the same as WCK_t in MR20 OP[3:2]=00_B, and when MR20 OP[3:2]= 10_B, WCK_c polarity is the same as WCK_c in MR20 OP[3:2]=00_B.
NOTE 9 When MR20 OP[1:0]= 01_B, RDQS_t polarity is the same as RDQS_t in MR20 OP[1:0]=10_B, and when MR20 OP[1:0]= 11_B, RDQS_cpolarity is the same as RDQS_cin MR20 OP[1:0]=10_B.

Figure 214 - Timing Relationship among CK, WCK and RDQS

7.7.8.2 Switching sequence between Single-ended and Differential

The mode switching for WCK and RDQS can be made by both an MR setting by MRW command and Frequency Set Point (FSP) procedure.

Switching the CK mode from differential to single ended and vice versa is done only via FSP procedure. The frequency set point update timing for Differential from/to Single-ended mode switching is shown below.

When changing the frequency set point MR16 OP[3:2], the VRCG setting: MR16 OP[6] is required to be changed into V_{REF} Fast Response (high current) mode at the same time. After frequency change time (tFC) is satisfied, VRCG can be changed into normal operation mode via MR16 OP[6].

When CK mode switches via FSP procedure, additional timing period is needed after MRW command.

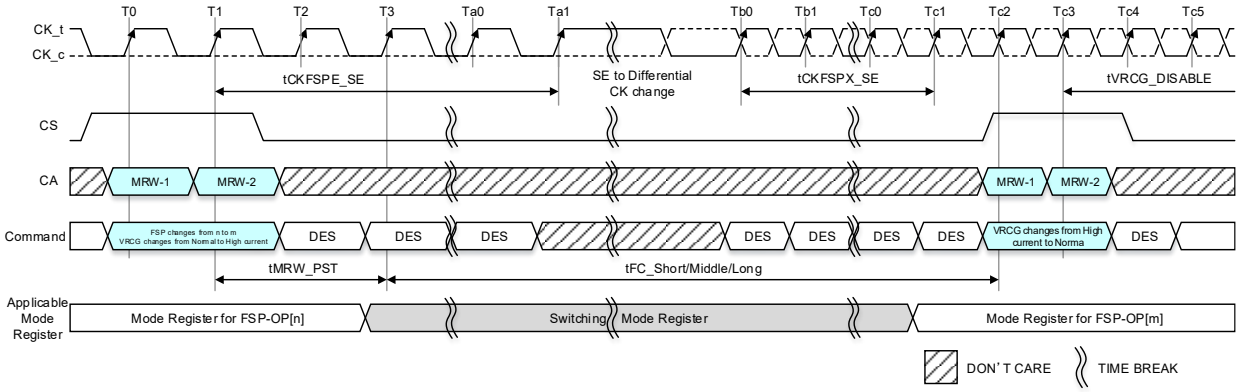

NOTE 1 The Clock frequency change definition should follow the frequency change operation. For more information, refer to Section 7.6.7 Input Clock Stop and Frequency Change.

NOTE 2 CK_c input level before Ta1 is an example. A stable high clock input is also allowed.

NOTE 3 Mode Register Setting FSP-OP=n: MR1 OP3=1_B: Single-Ended CK, Mode Register Setting FSP-OP=m: MR1 OP3=0_B: Differential CK.

NOTE 4 The CS input is required to be LOW from the rising edge of CK_t (at cycle T2) until the rising edge of CK_t at the end of tCKFSPX_SE timing (Tc1).

Figure 215 - SE to Differential CK and Write DQS -FSP Switching Timing

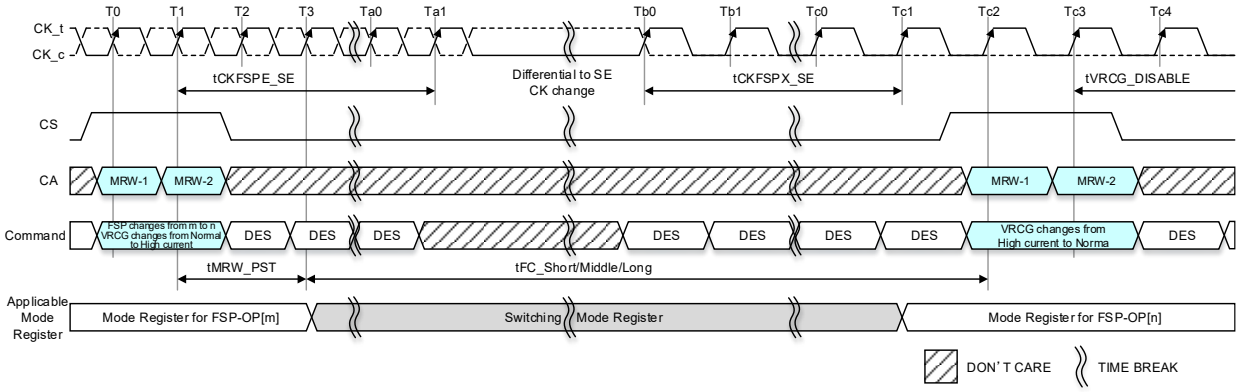

NOTE 1 The Clock frequency change definition should follow the frequency change operation. For more information, refer to Section 7.6.7 Input Clock Stop and Frequency Change.

NOTE 2 Clock input level after Tb0 is an example. A stable high clock input is also allowed.

NOTE 3 Mode Register Setting FSP-OP=m: MR1 OP3=0_B: Differential CK Mode Register Setting FSP-OP=m: MR1 OP3=1_B: SIngle-Ended CK.

NOTE 4 The CS input is required to be LOW from the rising edge of CK_t (at cycle T2) until the rising edge of CK_t at the end of tCKFSPX_SE timing (Tc1).

Figure 216 - Differential to SE CK and Write DQS -FSP Switching Timing

7.7.8.3 VRCG Enable timing

The VRCG Enable timing is postponed 2 clocks after MRW command to remove the effect of V_{REF}(CA) variation by VRCG mode change when MR1 OP[3]: Single ended Clock has been set 1_B (Enable) at least one physical register is shown below.

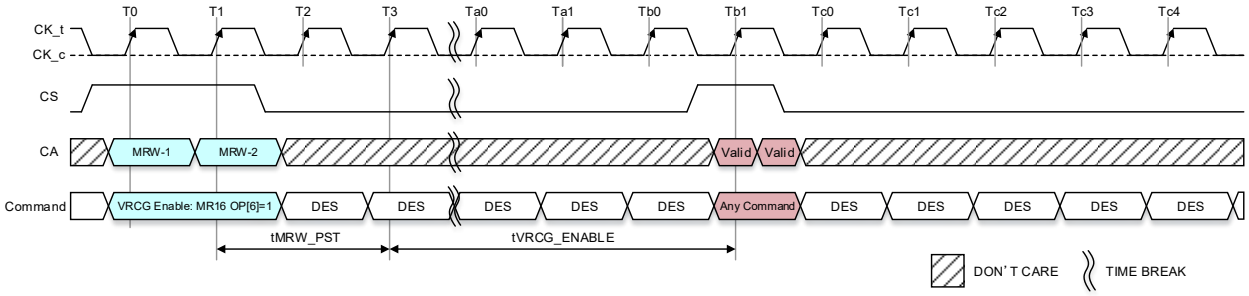

Figure 217 - VRCG status change to high current mode: Single-ended Clock Case

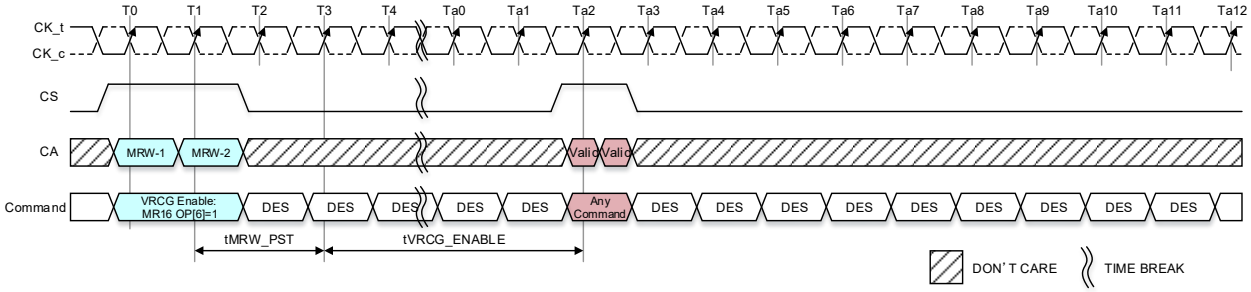

Figure 218 - VRCG status change to high current mode: Differential Clock Case

7.7.8.4 AC parameters for Single Ended (SE)

The AC timing is shown in Table is applied under conditions of Single ended mode.

Table 300 - SE from/to Differential FSP and additional period for MRW AC timing

Parameter	Symbol	Min/ Max	Data Rate	Unit	Note
			Equal or less than 1600Mbps		
Frequency Set Point Parameters for Switching Single-ended from/to Differential Clock					
Valid Clock Requirement after entering FSP when changing between SE/Differential modes	tCKFSPE_SE	Min	Max(15ns, 8nCK)	-	
Valid Clock Requirement before first valid command after an FSP change between SE/Differential modes	tCKFSPX_SE	Min	Max(15ns, 8nCK)	-	
Additional period for after MRW command					
Post Clock for MRW	tMRW_PST	Min	2	nCK	

Table 301 - Delta CK and DQS Specification

Item	Min/ Max	Equal or less than 1600Mbps	Unit	Note
Vref for single ended CK	-	VDDQ/2	-	
Vref for single ended WCK	-	VDDQ/2	-	
tCIVW1	Min	0.52	UI	UI =0.5tCK
tCIVW2	Min	0.35	UI	UI= 0.5tCK
tDIVW1	Min	0.52	UI	UI=0.5tWCK,
tDIVW2	Min	0.35	UI	UI=0.5tWCK,
tQSH	Min	tWCH-0.10	tWCK(avg)	
tQSL	Min	tWCL-0.10	tWCK(avg)	
tWCK2CK	Min	Max(-0.25*tWCK -100ps, TBDps)	ps	@WCK=800MHz, 2:1 mode CK/WCK asymmetrical
	Max	Max(0.25*tWCK +100ps,TBDps)	ps	

7.7.9 Enhanced WCK Always On Mode

LPDDR5 device requires MR18 OP[4] nonzero to enable WCK Always On mode. LPDDR5 SDRAM optionally supports one or both of the following Enhanced WCK Always On Modes to save internal WCK clock net power.

7.7.9.1 CAS-command-based Enhanced WCK Always On Mode

LPDDR5 device requires MR18 OP[4] nonzero to enable WCK Always On mode. If LPDDR5 device supports an enhanced WCK Always On Mode by reading out MR0 OP[2]=1_B, LPDDR5 controller is able to issue a CAS-WCK_SUSPEND command to reduce some of internal WCK clock net power consumption inside LPDDR5 devices. CAS-WCK_SUSPEND is a standalone command like CAS-FAST_SYNC command and may be issued anytime unless it interrupts on-going Read or Write WCK2CK SYNC operation when MR18 OP[4]=1_B. WCK SUSPEND mode keeps requiring WCK toggling input and exits automatically by following Read or Write or Mask Write command without issuing any additional explicit command. **Table 302** shows CAS command operands and WCK SUSPEND operation mode.

Table 302 - CAS Command Operands - WCK SUSPEND

SDRAM COMMAND	BK ORG (BG, 16B, 8B)	SDR CMD PIN	DDR COMMAND PINS							CK_t edge
		CS	CA0	CA1	CA2	CA3	CA4	CA5	CA6	
CAS	Any	H	L	L	H	H	WS_WR	WS_RD	WS_FS	R1
		X	DC0	DC1	DC2	DC3	WRX	WXSA	WXSB /B3	F1

Operation Mode		CAS Command Operands					
	WS_WR	WS_RD	WS_FS	DC0-3	WRX	WXSA	WXSB /B3
WCK SUSPEND	H	L	H	LLLL	L	L	L

NOTE 1 CAS-WCK_SUSPEND command is valid only when MR0 OP[2]=1B (Enhanced WCK Always On mode supported) and MR18 OP[4]= 1B (WCK Always On mode enabled)

NOTE 1 BG mode, WCK:CK=4:1, READ w/ BL16, tWCKPST=4.5nWCK.
NOTE 2 MR18 OP[4]=1B (WCK Always On Mode Enabled), MR0 OP[2]=1B (Enhanced WCK Always On Mode Supported)

Figure 219 illustrates CAS-WCK_SUSPENC command timing example with Read operation. CAS-WS_RD command at T0 initiates WCK2CK SYNC and LPDDR5 controller shall maintain WCK2CK SYNC lock status by WCK toggling input. CAS-WCK_SUSPEND command may be issued any time after WCK2CK SYNC expires (RL + BL/n_max + RD(tWCKPST/tCK), Tc5) not to interrupt on-going WCK2CK state from READ command. A minimum delay from CAS-WCK_SUSPEND command to following READ/WRITE/MASK WRITE command is defined as tWCKSUS timing parameter.

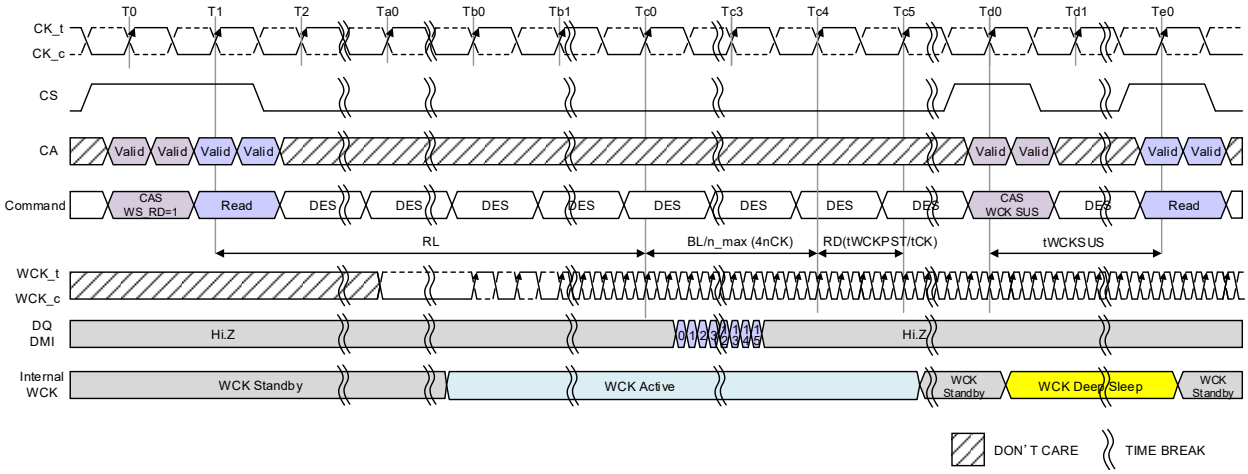

NOTE 1 BG mode, WCK:CK=4:1, READ w/ BL16, tWCKPST=4.5nWCK.
NOTE 2 MR18 OP[4]=1B (WCK Always On Mode Enabled), MR0 OP[2]=1B (Enhanced WCK Always On Mode Supported)

Figure 219 - Enhanced WCK Always On Mode Timing Example

Table 303 - Enhanced WCK Always On Mode Timing Parameter

Parameter	Symbol	Min/Max	Value	Unit
Delay from CAS-WCK_SUSPEND command to next READ/WRITE/MASK WRITE Command	tWCKSUS	Min	4	nCK

7.7.9.2 Read/Write-command-based Enhanced WCK Always On Mode

If LPDDR5 device supports Read/Write-command-based Enhanced WCK Always On ModeLPDDR5 SDRAM stays in WCK SUSPEND state to reduce some of internal WCK clock net power consumption while WCK is not required for data transaction. LPDDR5 SDRAM exits WCK SUSPEND automatically following Read or Write or Mask Write command. After the data transaction, LPDDR5 SDRAM automatically follows WCK2CK sync off timing to return to WCK SUSPEND state. All command to command timing constrains for WCK Always On Mode are unchanged when this mode is enabled.

Figure 220 illustrates WCK SUSPEND timing example with Read operation. CAS-WS_RD command at T0 initiates WCK2CK SYNC and LPDDR5 controller shall maintain WCK2CK SYNC lock status by WCK toggling input. LPDDR5 device automatically exits WCK SUSPEND state after receiving Read command and returns to WCK SUSPEND state after data transaction.

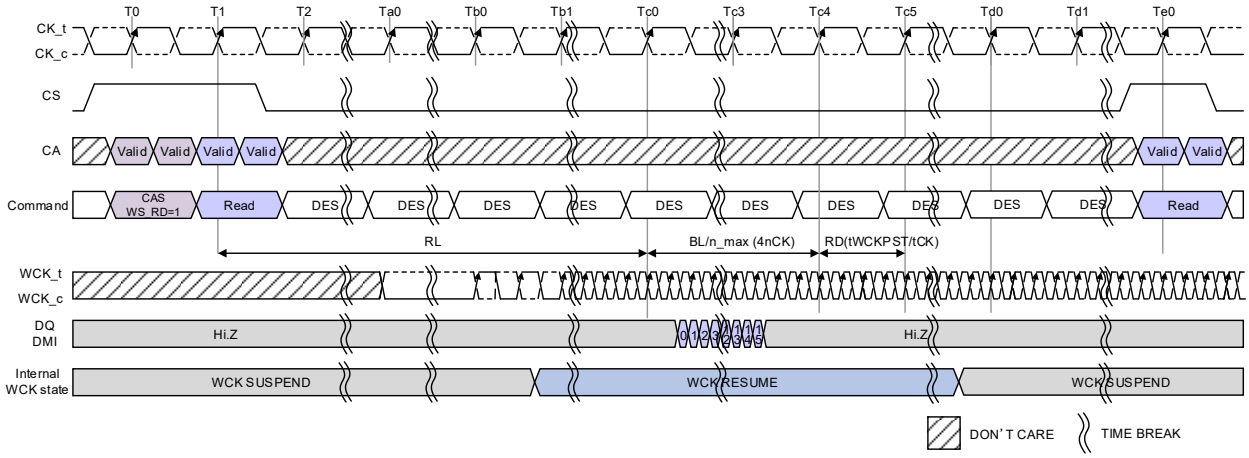

NOTE 1 MR18 OP[4]=1_B (WCK Always On Mode Enabled) AND Read/Write-command-based Enhanced WCK Always On Mode Supported.

Figure 220 - RD/WR-command-based Enhanced WCK Always On Mode Timing Example

7.7.10 Rank to Rank AC Parameter

Table 304 - WCK to CK/DQ offset Rank to Rank Variation

Item	Symbol	WCK Freq Mode	Min / Max	Data Rate	Unit	Note
				All Operating Points		
WCK to CK offset rank to rank variation	tWCK2CK_rank2rank	All Modes	Min	0	ps	1, 2, 3
			Max	100	ps	
WCK to DQ Input offset rank to rank variation	tWCK2DQI_rank2rank	High Freq Mode	Min	0	ps	1, 2, 3, 4
			Max	150	ps	
		Low Freq Mode	Min	0	ps	
			Max	250	ps	
WCK to DQ Output offset rank to rank variation	tWCK2DQO_rank2rank	High Freq Mode	Min	0	ps	1, 2, 3, 4
			Max	400	ps	
		Low Freq Mode	Min	0	ps	
			Max	650	ps	

NOTE 1 The same voltage and temperature are applied to tWCK2CK_rank2rank, tWCK2DQI_rank2rank, tWCK2DQO_rank2rank AC parameters.

NOTE 2 tWCK2CK_rank2rank, tWCK2DQI_rank2rank and tWCK2DQO_rank2rank AC parameters are applied to multi-ranks DQ bytes per channel within a package consisting of the same design dies.

NOTE 3 tWCK2CK_rank2rank, tWCK2DQI_rank2rank and tWCK2DQO_rank2rank AC parameters are applied to multi byte mode dies DQ bytes per channel which share the same CK input within a package consisting of the same design dies.

NOTE 4 MR18 OP[3]=0B WCK Low Freq mode, MR18 OP[3]=1B WCK High Freq mode.

8 Command Constraint and AC timing

8.1 Effective Burst Length (BL/n) Definition

Table 305 - Effective Burst Length (BL/n) Definition

WCK:CK Ratio	Bank ORG	Bank to Bank Constraints	WCK frequency	Burst Length (BL)	BL/n	BL/n_min	BL/n_max
2:1	16B Mode	Any Bank to Bank	≤1600Mhz	BL16	4*tCK (BL/4)	4*tCK (BL/4)	4*tCK (BL/4)
				BL32	8*tCK (BL/4)	8*tCK (BL/4)	8*tCK (BL/4)
	8B Mode	Any Bank to Bank	≤1600Mhz	BL32	8*tCK (BL/4)	8*tCK (BL/4)	8*tCK (BL/4)
		MRR, WFF, RFF, RDC 8)	≤1600Mhz	BL16	8*tCK (BL/2)	8*tCK (BL/2)	8*tCK (BL/2)
4:1	16B Mode	Any Bank to Bank	≤1600Mhz	BL16	2*tCK (BL/8)	2*tCK (BL/8)	2*tCK (BL/8)
				BL32	4*tCK (BL/8)	4*tCK (BL/8)	4*tCK (BL/8)
	BG Mode	Same BG	>1600Mhz	BL16	4*tCK (2*BL/8)	2*tCK (BL/8)	4*tCK (2*BL/8)
		Different BG			2*tCK (BL/8)		
		Same BG		BL32	8*tCK (2*BL/8)	6*tCK (1.5*BL/8)	8*tCK (2*BL/8)
		Different BG			2*tCK (0.5*BL/8)		
	8B Mode	Any Bank to Bank	Any freq	BL32	4*tCK (BL/8)	4*tCK (BL/8)	4*tCK (BL/8)
		MRR, WFF, RFF, RDC 8)	Any freq	BL16	4*tCK (BL/4)	4*tCK (BL/4)	4*tCK (BL/4)

NOTE 1 BL/n is minimum column to column cycle time, tCCD(min).
NOTE 2 BL/n_min is minimum burst data transfer time in DQ bus.
NOTE 3 BL/n_max is required column array cycle time to allow next column array cycle.
NOTE 4 BL/n, BL/n_min and BL/n_max are parameters in a CK domain.
NOTE 5 BL/n, BL/n_min and BL/n_max are same in an 8B or 16B mode.
NOTE 6 In case of same BG in a BG mode, BL/n = BL/n_max > BL/n_min.
NOTE 7 In case of different BG in a BG mode, BL/n=BL/n_min < BL/n_max for BL16, BL/n < BL/n_min < BL/n_max for BL32.
NOTE 8 For MRR, WFF, RFF and RDC commands in an 8B mode, normal Write/Read operation timings (BL32) are applied to WCK2CK SYNC Off and ODT/Non-target ODT.

Figure 221 - Write Timing Diagram (BG mode, CKR=4:1, BL32) Example for BL/n, BL/n_min and BL/n_max

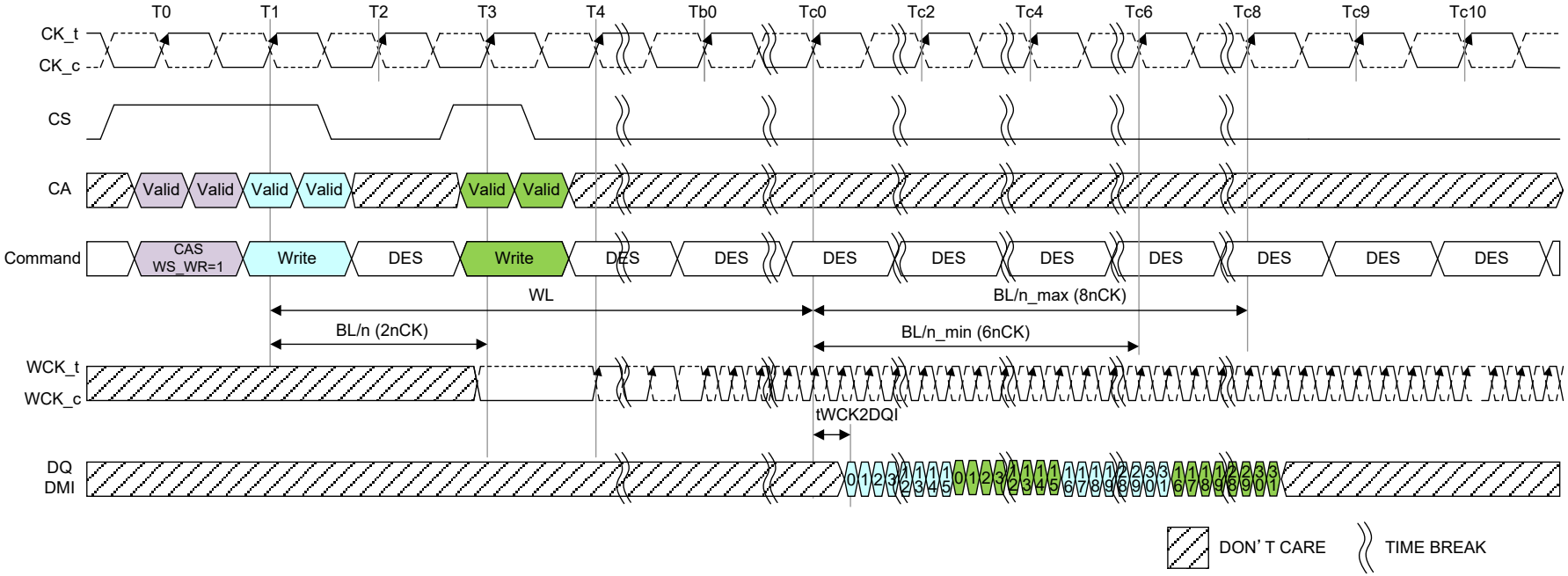

8.2 Command Timing constraints

Table 306 - Command Timing Constraints for Same Banks in Same Bank Group (DQ ODT is disabled)

Next CMD / Current CMD	ACTIVE	READ	WRITE	MASK WRITE	PRECHARGE
ACTIVE	Illegal	RU(tRCD/tCK)	RU(tRCD/tCK)	RU(tRCD/tCK)	RU(tRAS/tCK)
READ (BL16 or BL32)	Illegal	BL/n	RL + BL/n_max + RU(tWCKDQO(max) /tCK) – WL[2)]	RL + BL/n_max + RU(tWCKDQO(max)/tCK) – WL[2)]	BL/n_min + RU(tRBTP/tCK[1)]
WRITE (BL16)	Illegal	WL + BL/n_max + RU(tWTR_L/tCK)	BL/n	4*BL/n_max	WL + BL/n_min + 1 + RU(tWR/tCK)
WRITE (BL32)				2.5*BL/n_max	
MASK WRITE (BL16)	Illegal	WL + BL/n_max + RU(tWTR_L/tCK)	BL/n	4*BL/n_max	WL + BL/n_min + 1 + RU(tWR/tCK)
PRECHARGE	RU(tRP/tCK)	Illegal	Illegal	Illegal	2

Note 1. Refer to READ burst end to PRECHARGE delay (tRBTP)

Note 2. Read to Write Timing (tRTW) varies depending on an enhanced NT-ODT control (MR0 OP[0]), Bank/Bank Group Organization (MR3 OP[4:3]), WCK to CK frequency ratio (MR18: OP[7]), DQ Bus Receiver On-Die-Termination (MR11 OP[2:0]), Non-Target DQ Bus Receiver On-Die-Termination (MR41 OP[7:5]), Read DQS (MR20 OP[1:0]), Write link ECC Control (MR22 OP[5:4]), WCK-RDQS_t/Parity Training (MR46 OP[2]), and Read/Write-based WCK-RDQS_training mode (MR26 OP[7]). Refer to the Read to Write Timing (tRTW) Tables.

Table 307 - Command Timing Constraints for Different Banks in Same Bank Group (DQ ODT is disabled)

Next CMD / Current CMD	ACTIVE	READ	WRITE	MASK WRITE	PRECHARGE
ACTIVE	RU(tRRD_L/tCK)	1	1	1	1
READ (BL16 or BL32)	1	BL/n	RL + BL/n_max + RU(tWCKDQO(max) /tCK) - WL[1)]	RL + BL/n_max + RU(tWCKDQO(max) /tCK) - WL[1)]	1
WRITE (BL16)	1	WL + BL/n_max + RU(tWTR_L/tCK)	BL/n	BL/n_max	1
WRITE (BL32)					
MASK WRITE (BL16)	1	WL + BL/n_max + RU(tWTR_L/tCK)	BL/n	BL/n_max	1
PRECHARGE	1	1	1	1	2

Note 1. Read to Write Timing (tRTW) varies depending on an enhanced NT-ODT control (MR0 OP[0]), Bank/Bank Group Organization (MR3 OP[4:3]), WCK to CK frequency ratio (MR18: OP[7]), DQ Bus Receiver On-Die-Termination (MR11 OP[2:0]), Non-Target DQ Bus Receiver On-Die-Termination (MR41 OP[7:5]), Read DQS (MR20 OP[1:0]), Write link ECC Control (MR22 OP[5:4]), WCK-RDQS_t/Parity Training (MR46 OP[2]), and Read/Write-based WCK-RDQS_training mode (MR26 OP[7]). Refer to the Read to Write Timing (tRTW) Tables.

Table 308 - Command Timing Constraints for Different Banks in Different Bank Group (DQ ODT is disabled)

Next CMD / Current CMD	ACTIVE	READ	WRITE	MASK WRITE	PRECHARGE
ACTIVE	RU(tRRD_S/tCK)	1	1	1	1
READ (BL16 or BL32)	1	BL/n	RL + BL/n_min + RU(tWCKDQO(max) /tCK) - WL[1)]	RL + BL/n_min + RU(tWCKDQO(max) /tCK) - WL[1)]	1
WRITE (BL16)	1	WL + BL/n_min + RU(tWTR_S/tCK)	BL/n	BL/n	1
WRITE (BL32)					
MASK WRITE (BL16)	1	WL + BL/n_min + RU(tWTR_S/tCK)	BL/n	BL/n	1
PRECHARGE	1	1	1	1	2

Note 1. Read to Write Timing (tRTW) varies depending on an enhanced NT-ODT control (MR0 OP[0]), Bank/Bank Group Organization (MR3 OP[4:3]), WCK to CK frequency ratio (MR18: OP[7]), DQ Bus Receiver On-Die-Termination (MR11 OP[2:0]), Non-Target DQ Bus Receiver On-Die-Termination (MR41 OP[7:5]), Read DQS (MR20 OP[1:0]), Write link ECC Control (MR22 OP[5:4]), WCK-RDQS_t/Parity Training (MR46 OP[2]), and Read/Write-based WCK-RDQS_training mode (MR26 OP[7]). Refer to the Read to Write Timing (tRTW) Tables.

Table 309 - Command Timing Constraints for Same Banks in 8B Mode (DQ ODT is disabled)

Next CMD / Current CMD	ACTIVE	READ	WRITE	MASK WRITE	PRECHARGE
ACTIVE	Illegal	RU(tRCD/tCK)	RU(tRCD/tCK)	RU(tRCD/tCK)	RU(tRAS/tCK)
READ (BL32)	Illegal	BL/n	RL + BL/n + RU(tWCKDQO(max) /tCK) - WL[2)]	RL + BL/n + RU(tWCKDQO(max) /tCK) - WL[2)]	BL/n + RU(tRBTP/tCK)[1)]
WRITE (BL32)	Illegal	WL + BL/n + RU(tWTR/tCK)	BL/n	4*BL/n	WL + BL/n **+ 1** + RU(tWR/tCK)
MASK WRITE (BL32)	Illegal	WL + BL/n + RU(tWTR/tCK)	BL/n	4*BL/n (4:1) 2*BL/n (2:1)	WL + BL/n **+ 1** + RU(tWR/tCK)
PRECHARGE	RU(tRP/tCK)	Illegal	Illegal	Illegal	2

Note 1. Refer to READ burst end to PRECHARGE delay (tRBTP).

Note 2. Read to Write Timing (tRTW) varies depending on an enhanced NT-ODT control (MR0 OP[0]), Bank/Bank Group Organization (MR3 OP[4:3]), WCK to CK frequency ratio (MR18: OP[7]), DQ Bus Receiver On-Die-Termination (MR11 OP[2:0]), Non-Target DQ Bus Receiver On-Die-Termination (MR41 OP[7:5]), Read DQS (MR20 OP[1:0]), Write link ECC Control (MR22 OP[5:4]), WCK-RDQS_t/Parity Training (MR46 OP[2]), and Read/Write-based WCK-RDQS_training mode (MR26 OP[7]). Refer to the Read to Write Timing (tRTW) Tables.

Table 310 - Command Timing Constraints for Different Banks in 8B Mode (DQ ODT is disabled)

Next CMD / Current CMD	ACTIVE	READ	WRITE	MASK WRITE	PRECHARGE
ACTIVE	RU(tRRD/tCK)	1	1	1	1
READ (BL32)	1	BL/n	RL + BL/n + RU(tWCKDQO(max) /tCK) - WL[1)]	RL + BL/n + RU(tWCKDQO(max) /tCK) - WL[1)]	1
WRITE (BL32)	1	WL + BL/n + RU(tWTR/tCK)	BL/n	BL/n	1
MASK WRITE (BL32)	1	WL + BL/n + RU(tWTR/tCK)	BL/n	BL/n	1
PRECHARGE	1	1	1	1	2

Note 1. Read to Write Timing (tRTW) varies depending on an enhanced NT-ODT control (MR0 OP[0]), Bank/Bank Group Organization (MR3 OP[4:3]), WCK to CK frequency ratio (MR18: OP[7]), DQ Bus Receiver On-Die-Termination (MR11 OP[2:0]), Non-Target DQ Bus Receiver On-Die-Termination (MR41 OP[7:5]), Read DQS (MR20 OP[1:0]), Write link ECC Control (MR22 OP[5:4]), WCK-RDQS_t/Parity Training (MR46 OP[2]), and Read/Write-based WCK-RDQS_training mode (MR26 OP[7]). Refer to the Read to Write Timing (tRTW) Tables.

Table 311 - Command Timing Constraints for Same Banks in 16B Mode (DQ ODT is disabled)

Next CMD / Current CMD	ACTIVE	READ	WRITE	MASK WRITE	PRECHARGE
ACTIVE	Illegal	RU(tRCD/tCK)	RU(tRCD/tCK)	RU(tRCD/tCK)	RU(tRAS/tCK)
READ (BL16 or BL32)	Illegal	BL/n	RL + BL/n + RU(tWCKDQO(max) /tCK) - WL[2)]	RL + BL/n + RU(tWCKDQO(max) /tCK) - WL[2)]	BL/n + RU(tRBTP/tCK)[1)]
WRITE (BL16)	Illegal	WL + BL/n + RU(tWTR/tCK)	BL/n	4*BL/n	WL + BL/n **+ 1** + RU(tWR/tCK)
WRITE (BL32)				2.5*BL/n	
MASK WRITE (BL16)	Illegal	WL + BL/n + RU(tWTR/tCK)	BL/n	4*BL/n	WL + BL/n **+ 1** + RU(tWR/tCK)
PRECHARGE	RU(tRP/tCK)	Illegal	Illegal	Illegal	2

Note 1. Refer to READ burst end to PRECHARGE delay (tRBTP).

Note 2. Read to Write Timing (tRTW) varies depending on an enhanced NT-ODT control (MR0 OP[0]), Bank/Bank Group Organization (MR3 OP[4:3]), WCK to CK frequency ratio (MR18: OP[7]), DQ Bus Receiver On-Die-Termination (MR11 OP[2:0]), Non-Target DQ Bus Receiver On-Die-Termination (MR41 OP[7:5]), Read DQS (MR20 OP[1:0]), Write link ECC Control (MR22 OP[5:4]), WCK-RDQS_t/Parity Training (MR46 OP[2]), and Read/Write-based WCK-RDQS_training mode (MR26 OP[7]). Refer to the Read to Write Timing (tRTW) Tables.

Table 312 - Command Timing Constraints for Different Banks in 16B Mode (DQ ODT is disabled)

Next CMD / Current CMD	ACTIVE	READ	WRITE	MASK WRITE	PRECHARGE
ACTIVE	RU(tRRD/tCK)	1	1	1	1
READ (BL16 or BL32)	1	BL/n	RL + BL/n + RU(tWCKDQO(max) /tCK) - WL[1)]	RL + BL/n + RU(tWCKDQO(max) /tCK) - WL[1)]	1
WRITE (BL16)	1	WL + BL/n + RU(tWTR/tCK)	BL/n	BL/n	1
WRITE (BL32)					
MASK WRITE (BL16)	1	WL + BL/n + RU(tWTR/tCK)	BL/n	BL/n	1
PRECHARGE	1	1	1	1	2

Note 1. Read to Write Timing (tRTW) varies depending on an enhanced NT-ODT control (MR0 OP[0]), Bank/Bank Group Organization (MR3 OP[4:3]), WCK to CK frequency ratio (MR18: OP[7]), DQ Bus Receiver On-Die-Termination (MR11 OP[2:0]), Non-Target DQ Bus Receiver On-Die-Termination (MR41 OP[7:5]), Read DQS (MR20 OP[1:0]), Write link ECC Control (MR22 OP[5:4]), WCK-RDQS_t/Parity Training (MR46 OP[2]), and Read/Write-based WCK-RDQS_training mode (MR26 OP[7]). Refer to the Read to Write Timing (tRTW) Tables.

Table 313 - Command Timing Constraints for Same Banks in Same Bank Group (DQ ODT is enabled)

Current CMD \ Next CMD	ACTIVE	READ	WRITE	MASK WRITE	PRECHARGE
READ (BL16 or BL32)	Illegal	BL/n	RL + BL/n_max + RU(tWCKDQO(max)/tCK) + RD(tRPST/tCK) – ODTLon – RD(tODTon(min)/tCK) + 1[2)]	RL + BL/n_max + RU(tWCKDQO(max)/tCK) + RD(tRPST/tCK) – ODTLon – RD(tODTon(min)/tCK) +1[2)]	BL/n_min + RU(tRBTP/tCK)[1)]

Note 1. Refer to READ burst end to PRECHARGE delay (tRBTP).
Note 2. Read to Write Timing (tRTW) varies depending on an enhanced NT-ODT control (MR0 OP[0]), Bank/Bank Group Organization (MR3 OP[4:3]), WCK to CK frequency ratio (MR18: OP[7]), DQ Bus Receiver On-Die-Termination (MR11 OP[2:0]), Non-Target DQ Bus Receiver On-Die-Termination (MR41 OP[7:5]), Read DQS (MR20 OP[1:0]), Write link ECC Control (MR22 OP[5:4]), WCK-RDQS_t/Parity Training (MR46 OP[2]), and Read/Write-based WCK-RDQS_training mode (MR26 OP[7]). Refer to the Read to Write Timing (tRTW) Tables.

Table 314 - Command Timing Constraints for Different Banks in Same Bank Group (DQ ODT is enabled)

Current CMD \ Next CMD	ACTIVE	READ	WRITE	MASK WRITE	PRECHARGE
READ (BL16 or BL32)	1	BL/n	RL + BL/n_max + RU(tWCKDQO(max)/tCK) + RD(tRPST/tCK) – ODTLon – RD(tODTon(min)/tCK) + 1[1)]	RL + BL/n_max + RU(tWCKDQO(max)/tCK) + RD(tRPST/tCK) – ODTLon – RD(tODTon(min)/tCK) +1[1)]	1

Note 1. Read to Write Timing (tRTW) varies depending on an enhanced NT-ODT control (MR0 OP[0]), Bank/Bank Group Organization (MR3 OP[4:3]), WCK to CK frequency ratio (MR18: OP[7]), DQ Bus Receiver On-Die-Termination (MR11 OP[2:0]), Non-Target DQ Bus Receiver On-Die-Termination (MR41 OP[7:5]), Read DQS (MR20 OP[1:0]), Write link ECC Control (MR22 OP[5:4]), WCK-RDQS_t/Parity Training (MR46 OP[2]), and Read/Write-based WCK-RDQS_training mode (MR26 OP[7]). Refer to the Read to Write Timing (tRTW) Tables.

Table 315 - Command Timing Constraints for Different Banks in Different Bank Group (DQ ODT is enabled)

Current CMD \ Next CMD	ACTIVE	READ	WRITE	MASK WRITE	PRECHARGE
READ (BL16 or BL32)	1	BL/n	RL + BL/n_min + RU(tWCKDQO(max)/tCK) + RD(tRPST/tCK) – ODTLon – RD(tODTon(min)/tCK) + 1[1)]	RL + BL/n_min + RU(tWCKDQO(max)/tCK) + RD(tRPST/tCK) – ODTLon – RD(tODTon(min)/tCK) + 1[1)]	1

Note 1. Read to Write Timing (tRTW) varies depending on an enhanced NT-ODT control (MR0 OP[0]), Bank/Bank Group Organization (MR3 OP[4:3]), WCK to CK frequency ratio (MR18: OP[7]), DQ Bus Receiver On-Die-Termination (MR11 OP[2:0]), Non-Target DQ Bus Receiver On-Die-Termination (MR41 OP[7:5]), Read DQS (MR20 OP[1:0]), Write link ECC Control (MR22 OP[5:4]), WCK-RDQS_t/Parity Training (MR46 OP[2]), and Read/Write-based WCK-RDQS_training mode (MR26 OP[7]). Refer to the Read to Write Timing (tRTW) Tables.

Table 316 - Command Timing Constraints for Same Banks in 8B Mode (DQ ODT is enabled)

Current CMD \ Next CMD	ACTIVE	READ	WRITE	MASK WRITE	PRECHARGE
READ (BL32)	Illegal	BL/n	RL + BL/n + RU(tWCKDQO(max)/tCK) + RD(tRPST/tCK) – ODTLon – RD(tODTon(min)/tCK) + 1[2)]	RL + BL/n + RU(tWCKDQO(max)/tCK) + RD(tRPST/tCK) – ODTLon – RD(tODTon(min)/tCK) + 1[2)]	BL/n + RU(tRBTP/tCK)[1)]

Note 1. Refer to READ burst end to PRECHARGE delay (tRBTP).

Note 2. Read to Write Timing (tRTW) varies depending on an enhanced NT-ODT control (MR0 OP[0]), Bank/Bank Group Organization (MR3 OP[4:3]), WCK to CK frequency ratio (MR18: OP[7]), DQ Bus Receiver On-Die-Termination (MR11 OP[2:0]), Non-Target DQ Bus Receiver On-Die-Termination (MR41 OP[7:5]), Read DQS (MR20 OP[1:0]), Write link ECC Control (MR22 OP[5:4]), WCK-RDQS_t/Parity Training (MR46 OP[2]), and Read/Write-based WCK-RDQS_training mode (MR26 OP[7]). Refer to the Read to Write Timing (tRTW) Tables.

Table 317- Command Timing Constraints for Different Banks in 8B Mode (DQ ODT is enabled)

Next CMD / Current CMD	ACTIVE	READ	WRITE	MASK WRITE	PRECHARGE
READ (BL32)	1	BL/n	RL + BL/n + RU(tWCKDQO(max)/tCK) + RD(tRPST/tCK) – ODTLon – RD(tODTon(min)/tCK) + 1[1)]	RL + BL/n + RU(tWCKDQO(max)/tCK) + RD(tRPST/tCK) – ODTLon – RD(tODTon(min)/tCK) + 1[1)]	1

Note 1. Read to Write Timing (tRTW) varies depending on an enhanced NT-ODT control (MR0 OP[0]), Bank/Bank Group Organization (MR3 OP[4:3]), WCK to CK frequency ratio (MR18: OP[7]), DQ Bus Receiver On-Die-Termination (MR11 OP[2:0]), Non-Target DQ Bus Receiver On-Die-Termination (MR41 OP[7:5]), Read DQS (MR20 OP[1:0]), Write link ECC Control (MR22 OP[5:4]), WCK-RDQS_t/Parity Training (MR46 OP[2]), and Read/Write-based WCK-RDQS_training mode (MR26 OP[7]). Refer to the Read to Write Timing (tRTW) Tables.

Table 318 - Command Timing Constraints for Same Banks in 16B Mode (DQ ODT is enabled)

Next CMD / Current CMD	ACTIVE	READ	WRITE	MASK WRITE	PRECHARGE
READ (BL16 or BL32)	Illegal	BL/n	RL + BL/n + RU(tWCKDQO(max)/tCK) + RD(tRPST/tCK) – ODTLon – RD(tODTon(min)/tCK) + 1[2)]	RL + BL/n + RU(tWCKDQO(max)/tCK) + RD(tRPST/tCK) – ODTLon – RD(tODTon(min)/tCK) + 1[2)]	BL/n + RU(tRBTP/tCK)[1)]

Note 1. Refer to READ burst end to PRECHARGE delay (tRBTP).

Note 2. Read to Write Timing (tRTW) varies depending on an enhanced NT-ODT control (MR0 OP[0]), Bank/Bank Group Organization (MR3 OP[4:3]), WCK to CK frequency ratio (MR18: OP[7]), DQ Bus Receiver On-Die-Termination (MR11 OP[2:0]), Non-Target DQ Bus Receiver On-Die-Termination (MR41 OP[7:5]), Read DQS (MR20 OP[1:0]), Write link ECC Control (MR22 OP[5:4]), WCK-RDQS_t/Parity Training (MR46 OP[2]), and Read/Write-based WCK-RDQS_training mode (MR26 OP[7]). Refer to the Read to Write Timing (tRTW) Tables.

Table 319 - Command Timing Constraints for Different Banks in 16B Mode (DQ ODT is enabled)

Next CMD / Current CMD	ACTIVE	READ	WRITE	MASK WRITE	PRECHARGE
READ (BL16 or BL32)	1	BL/n	RL + BL/n + RU(tWCKDQO(max)/tCK) + RD(tRPST/tCK) – ODTLon – RD(tODTon(min)/tCK) + 1[1)]	RL + BL/n + RU(tWCKDQO(max)/tCK) + RD(tRPST/tCK) – ODTLon – RD(tODTon(min)/tCK) + 1[1)]	1

Note 1. Read to Write Timing (tRTW) varies depending on an enhanced NT-ODT control (MR0 OP[0]), Bank/Bank Group Organization (MR3 OP[4:3]), WCK to CK frequency ratio (MR18: OP[7]), DQ Bus Receiver On-Die-Termination (MR11 OP[2:0]), Non-Target DQ Bus Receiver On-Die-Termination (MR41 OP[7:5]), Read DQS (MR20 OP[1:0]), Write link ECC Control (MR22 OP[5:4]), WCK-RDQS_t/Parity Training (MR46 OP[2]), and Read/Write-based WCK-RDQS_training mode (MR26 OP[7]). Refer to the Read to Write Timing (tRTW) Tables.

Table 320 - Auto Precharge Command Timing Constraints for Same Banks in Same Bank Group

Current CMD \ Next CMD	ACTIVE	READ with or without AP	WRITE with or without AP	MASK WRITE with or without AP	PRECHARGE or PRECHARGE ALL
READ with AP (BL16 or BL32)	BL/n_min + nRBTP [1)] + RU(tRPpb/tCK)	illegal	illegal	illegal	BL/n_min + nRBTP[1)]
WRITE with AP (BL16 or BL32)	WL + BL/n_min + 1 + nWR + RU(tRPpb/tCK)	illegal	illegal	illegal	WL + BL/n_min + 1 + nWR
MASK WRITE with AP (BL16)	WL + BL/n_min + 1 + nWR + RU(tRPpb/tCK)	illegal	illegal	illegal	WL + BL/n_min + 1 + nWR

NOTE 1 Refer to READ burst end to PRECHARGE delay (tRBTP).

Table 321 - Command Timing Constraints for Different Banks in Same Bank Group (DQ ODT Disabled)

Current CMD \ Next CMD	ACTIVE	READ with or without AP	WRITE with or without AP	MASK WRITE with or without AP	PRECHARGE[1)]
READ with AP (BL16 or BL32)	1	BL/n	RL + BL/n_max + RU(tWCKDQO(max) /tCK) - WL	RL + BL/n_max + RU(tWCKDQO(max) /tCK) - WL	1
WRITE with AP (BL16)	1	WL + BL/n_max + RU(tWTR_L/tCK)	BL/n	BL/n_max	1
WRITE with AP (BL32)					
MASK WRITE with AP (BL16)	1	WL + BL/n_max + RU(tWTR_L/tCK)	BL/n	BL/n_max	1

NOTE 1 In case the next command is PRECHARGE ALL, PRECHARGE ALL command timing in Same Banks in Same Bank Group (Table 320) is applied.

Table 322 - Command Timing Constraints for Different Banks in Different Bank Group (DQ ODT Disabled)

Current CMD \ Next CMD	ACTIVE	READ with or without AP	WRITE with or without AP	MASK WRITE with or without AP	PRECHARGE[1)]
READ with AP (BL16 or BL32)	1	BL/n	RL + BL/n_min + RU(tWCKDQO(max) /tCK) - WL	RL + BL/n_min + RU(tWCKDQO(max) /tCK) - WL	1
WRITE with AP (BL16) WRITE with AP (BL32)	1	WL + BL/n_min + RU(tWTR_S/tCK)	BL/n	BL/n	1
MASK WRITE with AP (BL16)	1	WL + BL/n_min + RU(tWTR_S/tCK)	BL/n	BL/n	1

NOTE 1 In case the next command is PRECHARGE ALL, PRECHARGE ALL command timing in Same Banks in Same Bank Group (Table 320) is applied.

Table 323 - Command Timing Constraints for Same Banks in 8B Mode

Current CMD \ Next CMD	ACTIVE	READ with or without AP	WRITE with or without AP	MASK WRITE with or without AP	PRECHARGE or PRECHARGE ALL
READ with AP (BL32)	BL/n + nRBTP[1)] + RU(tRPpb/tCK)	illegal	illegal	illegal	BL/n + nRBTP[1)]
WRITE with AP (BL32)	WL + BL/n + 1 + nWR + RU(tRPpb/tCK)	illegal	illegal	illegal	WL + BL/n + 1+ nWR
MASK WRITE with AP (BL32)	WL + BL/n + 1 + nWR + RU(tRPpb/tCK)	illegal	illegal	illegal	WL + BL/n + 1 + nWR

NOTE 1 Refer to READ burst end to PRECHARGE delay (tRBTP).

Table 324 - Command Timing Constraints for Different Banks in 8B Mode (DQ ODT Disabled)

Current CMD \ Next CMD	ACTIVE	READ with or without AP	WRITE with or without AP	MASK WRITE with or without AP	PRECHARGE[1)]
READ with AP (BL32)	1	BL/n	RL + BL/n + RU(tWCKDQO(max) /tCK) - WL	RL + BL/n + RU(tWCKDQO(max) /tCK) - WL	1
WRITE with AP (BL32)	1	WL + BL/n + RU(tWTR/tCK)	BL/n	BL/n	1
MASK WRITE with AP (BL32)	1	WL + BL/n + RU(tWTR/tCK)	BL/n	BL/n	1

NOTE 1 In case the next command is PRECHARGE ALL, PRECHARGE ALL command timing in Same Banks in 8B Mode (Table 323) is applied.

Table 325 - Command Timing Constraints for Same Banks in 16B Mode

Current CMD \ Next CMD	ACTIVE	READ with or without AP	WRITE with or without AP	MASK WRITE with or without AP	PRECHARGE or PRECHARGE ALL
READ with AP (BL16 or BL32)	BL/n + nRBTP[1)] + RU(tRPpb/tCK)	illegal	illegal	illegal	BL/n + nRBTP[1)]
WRITE with AP (BL16 or BL32)	WL + BL/n + 1 + nWR + RU(tRPpb/tCK)	illegal	illegal	illegal	WL + BL/n + 1 + nWR
MASK WRITE with AP (BL16)	WL + BL/n + 1 + nWR + RU(tRPpb/tCK)	illegal	illegal	illegal	WL + BL/n + 1 + nWR

NOTE 1 Refer to READ burst end to PRECHARGE delay (tRBTP).

Table 326 - Command Timing Constraints for Different Banks in 16B Mode (DQ ODT Disabled)

Current CMD \ Next CMD	ACTIVE	READ with or without AP	WRITE with or without AP	MASK WRITE with or without AP	PRECHARGE[1)]
READ with AP (BL16 or BL32)	1	BL/n	RL + BL/n + RU(tWCKDQO(max) /tCK) - WL	RL + BL/n + RU(tWCKDQO(max) /tCK) - WL	1
WRITE with AP (BL16 or BL32)	1	WL + BL/n + RU(tWTR/tCK)	BL/n	BL/n	1
MASK WRITE with AP (BL16)	1	WL + BL/n + RU(tWTR/tCK)	BL/n	BL/n	1

NOTE 1 In case the next command is PRECHARGE ALL, PRECHARGE ALL command timing in Same Banks in 16B Mode (Table 325) is applied.

Table 327 - Command Timing Constraints for Different Banks in Same Bank Group (DQ ODT Enabled)

Current CMD \ Next CMD	ACTIVE	READ with or without AP	WRITE with or without AP	MASK WRITE with or without AP	PRECHARGE[1)]
READ with AP (BL16 or BL32)	1	BL/n	RL + BL/n_max + RU(tWCKDQO(max) /tCK) + RD(tRPST/tCK) – ODTLon – RD(tODTon(min)/tCK) + 1	RL + BL/n_max + RU(tWCKDQO(max) /tCK) + RD(tRPST/tCK) – ODTLon – RD(tODTon(min)/tCK) + 1	1

NOTE 1 In case the next command is PRECHARGE ALL, PRECHARGE ALL command timing in Same Banks in Same Bank Group (Table 320) is applied.

Table 328 - Command Timing Constraints for Different Banks in Different Bank Group (DQ ODT Enabled)

Current CMD \ Next CMD	ACTIVE	READ with or without AP	WRITE with or without AP	MASK WRITE with or without AP	PRECHARGE[1)]
READ with AP (BL16 or BL32)	1	BL/n	RL + BL/n_min + RU(tWCKDQO(max) /tCK) + RD(tRPST/tCK) – ODTLon – RD(tODTon(min)/tCK) + 1	RL + BL/n_min + RU(tWCKDQO(max) /tCK) + RD(tRPST/tCK) – ODTLon – RD(tODTon(min)/tCK) + 1	1

NOTE 1 In case the next command is PRECHARGE ALL, PRECHARGE ALL command timing in Same Banks in Same Bank Group (Table 320) is applied.

Table 329 - Command Timing Constraints for Different Banks in 8B Mode (DQ ODT Enabled)

Current CMD \ Next CMD	ACTIVE	READ with or without AP	WRITE with or without AP	MASK WRITE with or without AP	PRECHARGE[1)]
READ with AP (BL32)	1	BL/n	RL + BL/n + RU(tWCKDQO(max)/tCK) + RD(tRPST/tCK) – ODTLon – RD(tODTon(min)/tCK) + 1	RL + BL/n + RU(tWCKDQO(max)/tCK) + RD(tRPST/tCK) – ODTLon – RD(tODTon(min)/tCK) + 1	1

NOTE 1 In case the next command is PRECHARGE ALL, PRECHARGE ALL command timing in Same Banks in 8B Mode (Table 323) is applied.

Table 330 - Command Timing Constraints for Different Banks in 16B Mode (DQ ODT Enabled)

Current CMD \ Next CMD	ACTIVE	READ with or without AP	WRITE with or without AP	MASK WRITE with or without AP	PRECHARGE[1)]
READ with AP (BL16 or BL32)	1	BL/n	RL + BL/n + RU(tWCKDQO(max)/tCK) + RD(tRPST/tCK) – ODTLon – RD(tODTon(min)/tCK) + 1	RL + BL/n + RU(tWCKDQO(max)/tCK) + RD(tRPST/tCK) – ODTLon – RD(tODTon(min)/tCK) + 1	1

NOTE 1 In case the next command is PRECHARGE ALL, PRECHARGE ALL command timing in Same Banks in 16B Mode (Table 325) is applied.

8.2.1 Read to Write Timing (tRTW)

The Read to Write Timing (tRTW) varies depending on whether an enhanced NT-ODT control which the LPDDR5 SDRAM can be controlled NT-ODT timing for DQ and RDQS separately.
Whether LPDDR5 SDRAM supports the enhanced NT-ODT control is described in MR0 OP[0]: NT-ODT Control.

- MR0 OP[0]=0_B: SDRAM supports same NT-ODT turn on/off latency for DQ and RDQS.
- MR0 OP[0]=1_B: SDRAM supports separate NT-ODT turn on/off latency for DQ and RDQS.

The Read to Write Timing also varies depending on following mode register setting.

- MR3 OP[4:3]: Bank/Bank Group Organization
- MR18: OP[7]: WCK to CK frequency ratio
- MR11 OP[2:0]: DQ Bus Receiver On-Die-Termination
- MR41 OP[7:5]: Non-Target DQ Bus Receiver On-Die-Termination
- MR20 OP[1:0]: Read DQS
- MR22 OP[5:4]: Write link ECC Control
- MR46 OP[2]: WCK-RDQS_t/Parity Training
- MR26 OP[7]: Read/Write-based WCK-RDQS_training mode

The read to write timing (tRTW) by above-mentioned MR setting is shown in the following tables.

8.2.2 Command constraint from Read to Write timing

8.2.2.1 In case of not supporting enhanced NT-ODT control

The following tables is shown the command constraint from Read to Write timing when LPDDR5 SDRAM does not support the enhanced NT-ODT control which the LPDDR5 SDRAM can be controlled NT-ODT turn on/off timing for DQ and RDQS separately. In this case, 0_B has been written in MR0 OP[0].

Table 331 - Same/Different Banks in Same Bank Group (BG Mode)

Use RDQS_t as input	RDQS MR20 OP[1:0]	NT-ODT MR41 OP[7:5]:	ODT MR11 OP[2:0]:	CKR MR18: OP[7]:	tRTW	Unit	Note
Disable	Enable	Disable	Disable	4:1	RL+BL/n_max+RU(tWCK2DQO(max)/tCK)-WL	nCK	1
Disable	Enable	Disable	Enable	4:1	RL+BL/n_max+RU(tWCK2DQO(max)/tCK)+RD(tRPST/tCK)-ODTLon-RD(tODTon(min)/tCK)+1	nCK	1
Disable	Enable	Enable	Enable	4:1	RL+BL/n_max+RU(tWCK2DQO(max)/tCK)+RD(tRPST/tCK)-ODTLon-RD(tODTon(min)/tCK)+1+1	nCK	1
Enable	Enable	Disable	Disable	4:1	RL+BL/n_max+RU(tWCK2DQO(max)/tCK)-WL+1	nCK	1,2
Enable	Enable	Disable	Enable	4:1	RL+BL/n_max+RU(tWCK2DQO(max)/tCK)+RD(tRPST/tCK)-ODTLon-RD(tODTon(min)/tCK)+1+1	nCK	1,2
Enable	Enable	Enable	Enable	4:1	RL+BL/n_max+RU(tWCK2DQO(max)/tCK)+RD(tRPST/tCK)-ODTLon-RD(tODTon(min)/tCK)+1+1	nCK	1,2

NOTE 1 tWCK2DQO(max) is applied tWCK2DQO_LF(max) or tWCK2DQO_HF(max) depending on MR18 OP[3]: WCK Frequency Mode setting.
MR18 OP[3]=0_B: tWCK2DQO_LF(max)
MR18 OP[3]=1_B: tWCK2DQO_HF(max)

NOTE 2 Use RDQS_t as input Enable: Write Link ECC: MR22 OP[5:4]=01_B or FIFO RDQS Training: MR46 OP[2]=1_B or -Read/Write-based WCK-RDQS_training mode: MR26 OP[7]=1_B.

NOTE 3 RDQS disable is not supported in a BG mode.

Table 332 - Different Banks in Different Bank Group (BG Mode)

Use RDQS_t as input	RDQS MR20 OP[1:0]	NT-ODT MR41 OP[7:5]:	ODT MR11 OP[2:0]:	CKR MR18: OP[7]:	tRTW	Unit	Note
Disable	Enable	Disable	Disable	4:1	RL+BL/n_min+RU(tWCK2DQO(max)/tCK)-WL	nCK	1
Disable	Enable	Disable	Enable	4:1	RL+BL/n_min+RU(tWCK2DQO(max)/tCK)+RD(tRPST/tCK)-ODTLon-RD(tODTon(min)/tCK)+1	nCK	1
Disable	Enable	Enable	Enable	4:1	RL+BL/n_min+RU(tWCK2DQO(max)/tCK)+RD(tRPST/tCK)-ODTLon-RD(tODTon(min)/tCK)+1+1	nCK	1
Enable	Enable	Disable	Disable	4:1	RL+BL/n_min+RU(tWCK2DQO(max)/tCK)-WL+1	nCK	1,2
Enable	Enable	Disable	Enable	4:1	RL+BL/n_min+RU(tWCK2DQO(max)/tCK)+RD(tRPST/tCK)-ODTLon-RD(tODTon(min)/tCK)+1+1	nCK	1,2
Enable	Enable	Enable	Enable	4:1	RL+BL/n_min+RU(tWCK2DQO(max)/tCK)+RD(tRPST/tCK)-ODTLon-RD(tODTon(min)/tCK)+1+1	nCK	1,2

NOTE 1 tWCK2DQO(max) is applied tWCK2DQO_LF(max) or tWCK2DQO_HF(max) depending on MR18 OP[3]: WCK Frequency Mode setting.
MR18 OP[3]=0_B: tWCK2DQO_LF(max)
MR18 OP[3]=1_B: tWCK2DQO_HF(max)

NOTE 2 Use RDQS_t as input Enable: Write Link ECC: MR22 OP[5:4]=01_B or FIFO RDQS Training: MR46 OP[2]=1_B or -Read/Write-based WCK-RDQS_training mode: MR26 OP[7]=1_B.

NOTE 3 RDQS disable is not supported in a BG mode.

Table 333 - Same/Different Banks in 16B/8B Mode

Use RDQS_t as input	RDQS MR20 OP[1:0]	NT-ODT MR41 OP[7:5]:	ODT MR11 OP[2:0]:	CKR MR18: OP[7]:	tRTW	Unit	Note
Disable	Disable	Disable	Disable	2:1	RL+BL/n+RU(tWCK2DQO(max)/tCK)-WL	nCK	1
Disable	Disable	Disable	Disable	4:1			
Disable	Disable	Disable	Enable	2:1	RL+BL/n+RU(tWCK2DQO(max)/tCK)+RD(tRPST/tCK)-ODTLon-RD(tODTon(min)/tCK)+1	nCK	1
Disable	Disable	Disable	Enable	4:1			
Disable	Disable	Enable	Enable	2:1	RL+BL/n+RU(tWCK2DQO(max)/tCK)+RD(tRPST/tCK)-ODTLon-RD(tODTon(min)/tCK)+1	nCK	1
Disable	Disable	Enable	Enable	4:1			
Disable	Enable	Disable	Disable	2:1	RL+BL/n+RU(tWCK2DQO(max)/tCK)-WL	nCK	1
Disable	Enable	Disable	Disable	4:1			
Disable	Enable	Disable	Enable	2:1	RL+BL/n+RU(tWCK2DQO(max)/tCK)+RD(tRPST/tCK)-ODTLon-RD(tODTon(min)/tCK)+1	nCK	1
Disable	Enable	Disable	Enable	4:1			
Disable	Enable	Enable	Enable	2:1	RL+BL/n+RU(tWCK2DQO(max)/tCK)+RD(tRPST/tCK)-ODTLon-RD(tODTon(min)/tCK)+1+2	nCK	1
Disable	Enable	Enable	Enable	4:1	RL+BL/n+RU(tWCK2DQO(max)/tCK)+RD(tRPST/tCK)-ODTLon-RD(tODTon(min)/tCK)+1+1	nCK	1
Enable	Disable	Disable	Disable	4:1	RL+BL/n+RU(tWCK2DQO(max)/tCK)-WL	nCK	1,2,3
Enable	Disable	Disable	Enable	4:1	RL+BL/n+RU(tWCK2DQO(max)/tCK)+RD(tRPST/tCK)-ODTLon-RD(tODTon(min)/tCK)+1	nCK	1,2,3
Enable	Disable	Enable	Enable	4:1	RL+BL/n+RU(tWCK2DQO(max)/tCK)+RD(tRPST/tCK)-ODTLon-RD(tODTon(min)/tCK)+1	nCK	1,2,3
Enable	Enable	Disable	Disable	4:1	RL+BL/n+RU(tWCK2DQO(max)/tCK)-WL+1	nCK	1,2,3
Enable	Enable	Disable	Enable	4:1	RL+BL/n+RU(tWCK2DQO(max)/tCK)+RD(tRPST/tCK)-ODTLon-RD(tODTon(min)/tCK)+1+1	nCK	1,2,3
Enable	Enable	Enable	Enable	4:1	RL+BL/n+RU(tWCK2DQO(max)/tCK)+RD(tRPST/tCK)-ODTLon-RD(tODTon(min)/tCK)+1+1	nCK	1,2,3

NOTE 1 tWCK2DQO(max) is applied tWCK2DQO_LF(max) or tWCK2DQO_HF(max) depending on MR18 OP[3]: WCK Frequency Mode setting.
MR18 OP[3]=0_B: tWCK2DQO_LF(max)
MR18 OP[3]=1_B: tWCK2DQO_HF(max)

NOTE 2 Use RDQS_t as input Enable: Write Link ECC: MR22 OP[5:4]=01_B or FIFO RDQS Training: MR46 OP[2]=1_B or -Read/Write-based WCK-RDQS_training mode: MR26 OP[7]=1_B.

NOTE 3 Use RDQS_t as input Enable can be supported for CKR=4:1 only.

8.2.2.2 In case of supporting enhanced NT-ODT control

The following tables is shown the command constraint from Read to Write timing when LPDDR5 SDRAM supports the enhanced NT-ODT control which the LPDDR5 SDRAM can be controlled NT-ODT turn on/off timing for DQ and RDQS separately. In this case, 1_B has been written in MR0 OP[0].

Table 334 - Same/Different Banks in Same Bank Group (BG Mode)

Use RDQS_t as input	RDQS MR20 OP[1:0]	NT-ODT MR41 OP[7:5]:	ODT MR11 OP[2:0]:	CKR MR18: OP[7]:	tRTW	Unit	Note
Disable	Enable	Disable	Disable	4:1	RL+BL/n_max+RU(tWCK2DQO(max)/tCK)-WL	nCK	1
Disable	Enable	Disable	Enable	4:1	RL+BL/n_max+RU(tWCK2DQO(max)/tCK)+RD(tRPST/tCK)-ODTLon-RD(tODTon(min)/tCK)+1	nCK	1
Disable	Enable	Enable	Enable	4:1	RL+BL/n_max+RU(tWCK2DQO(max)/tCK)+RD(tRPST/tCK)-ODTLon-RD(tODTon(min)/tCK)+1	nCK	1
Enable	Enable	Disable	Disable	4:1	RL+BL/n_max+RU(tWCK2DQO(max)/tCK)-WL+1	nCK	1,2
Enable	Enable	Disable	Enable	4:1	RL+BL/n_max+RU(tWCK2DQO(max)/tCK)+RD(tRPST/tCK)-ODTLon-RD(tODTon(min)/tCK)+1+1	nCK	1,2
Enable	Enable	Enable	Enable	4:1	RL+BL/n_max+RU(tWCK2DQO(max)/tCK)+RD(tRPST/tCK)-ODTLon-RD(tODTon(min)/tCK)+1+1	nCK	1,2

NOTE 1 tWCK2DQO(max) is applied tWCK2DQO_LF(max) or tWCK2DQO_HF(max) depending on MR18 OP[3]: WCK Frequency Mode setting.
MR18 OP[3]=0_B: tWCK2DQO_LF(max)
MR18 OP[3]=1_B: tWCK2DQO_HF(max)

NOTE 2 Use RDQS_t as input Enable: Write Link ECC: MR22 OP[5:4]=01_B or FIFO RDQS Training: MR46 OP[2]=1_B or -Read/Write-based WCK-RDQS_training mode: MR26 OP[7]=1_B.

NOTE 3 RDQS disable is not supported in a BG mode.

Table 335 - Different Banks in Different Bank Group (BG Mode)

Use RDQS_t as input	RDQS MR20 OP[1:0]	NT-ODT MR41 OP[7:5]:	ODT MR11 OP[2:0]:	CKR MR18: OP[7]:	tRTW	Unit	Note
Disable	Enable	Disable	Disable	4:1	RL+BL/n_min+RU(tWCK2DQO(max)/tCK)-WL	nCK	1
Disable	Enable	Disable	Enable	4:1	RL+BL/n_min+RU(tWCK2DQO(max)/tCK)+RD(tRPST/tCK)-ODTLon-RD(tODTon(min)/tCK)+1	nCK	1
Disable	Enable	Enable	Enable	4:1	RL+BL/n_min+RU(tWCK2DQO(max)/tCK)+RD(tRPST/tCK)-ODTLon-RD(tODTon(min)/tCK)+1	nCK	1
Enable	Enable	Disable	Disable	4:1	RL+BL/n_min+RU(tWCK2DQO(max)/tCK)-WL+1	nCK	1,2
Enable	Enable	Disable	Enable	4:1	RL+BL/n_min+RU(tWCK2DQO(max)/tCK)+RD(tRPST/tCK)-ODTLon-RD(tODTon(min)/tCK)+1+1	nCK	1,2
Enable	Enable	Enable	Enable	4:1	RL+BL/n_min+RU(tWCK2DQO(max)/tCK)+RD(tRPST/tCK)-ODTLon-RD(tODTon(min)/tCK)+1+1	nCK	1,2

NOTE 1 tWCK2DQO(max) is applied tWCK2DQO_LF(max) or tWCK2DQO_HF(max) depending on MR18 OP[3]: WCK Frequency Mode setting.
MR18 OP[3]=0_B: tWCK2DQO_LF(max)
MR18 OP[3]=1_B: tWCK2DQO_HF(max)

NOTE 2 Use RDQS_t as input Enable: Write Link ECC: MR22 OP[5:4]=01_B or FIFO RDQS Training: MR46 OP[2]=1_B or -Read/Write-based WCK-RDQS_training mode: MR26 OP[7]=1_B.

NOTE 3 RDQS disable is not supported in a BG mode.

Table 336 - Same/Different Banks in 16B/8B Mode

Use RDQS_t as input	RDQS MR20 OP[1:0]	NT-ODT MR41 OP[7:5]:	ODT MR11 OP[2:0]:	CKR MR18: OP[7]:	tRTW	Unit	Note
Disable	Disable	Disable	Disable	2:1	RL+BL/n+RU(tWCK2DQO(max)/tCK)-WL	nCK	1
Disable	Disable	Disable	Disable	4:1			
Disable	Disable	Disable	Enable	2:1	RL+BL/n+RU(tWCK2DQO(max)/tCK)+RD(tRPST/tCK)-ODTLon-RD(tODTon(min)/tCK)+1	nCK	1
Disable	Disable	Disable	Enable	4:1			
Disable	Disable	Enable	Enable	2:1	RL+BL/n+RU(tWCK2DQO(max)/tCK)+RD(tRPST/tCK)-ODTLon-RD(tODTon(min)/tCK)+1	nCK	1
Disable	Disable	Enable	Enable	4:1			
Disable	Enable	Disable	Disable	2:1	RL+BL/n+RU(tWCK2DQO(max)/tCK)-WL	nCK	1
Disable	Enable	Disable	Disable	4:1			
Disable	Enable	Disable	Enable	2:1	RL+BL/n+RU(tWCK2DQO(max)/tCK)+RD(tRPST/tCK)-ODTLon-RD(tODTon(min)/tCK)+1	nCK	1
Disable	Enable	Disable	Enable	4:1			
Disable	Enable	Enable	Enable	2:1	RL+BL/n+RU(tWCK2DQO(max)/tCK)+RD(tRPST/tCK)-ODTLon-RD(tODTon(min)/tCK)+1	nCK	1
Disable	Enable	Enable	Enable	4:1			
Enable	Disable	Disable	Disable	4:1	RL+BL/n+RU(tWCK2DQO(max)/tCK)-WL	nCK	1,2,3
Enable	Disable	Disable	Enable	4:1	RL+BL/n+RU(tWCK2DQO(max)/tCK)+RD(tRPST/tCK)-ODTLon-RD(tODTon(min)/tCK)+1	nCK	1,2,3
Enable	Disable	Enable	Enable	4:1	RL+BL/n+RU(tWCK2DQO(max)/tCK)+RD(tRPST/tCK)-ODTLon-RD(tODTon(min)/tCK)+1	nCK	1,2,3
Enable	Enable	Disable	Disable	4:1	RL+BL/n+RU(tWCK2DQO(max)/tCK)-WL+1	nCK	1,2,3
Enable	Enable	Disable	Enable	4:1	RL+BL/n+RU(tWCK2DQO(max)/tCK)+RD(tRPST/tCK)-ODTLon-RD(tODTon(min)/tCK)+1+1	nCK	1,2,3
Enable	Enable	Enable	Enable	4:1	RL+BL/n+RU(tWCK2DQO(max)/tCK)+RD(tRPST/tCK)-ODTLon-RD(tODTon(min)/tCK)+1+1	nCK	1,2,3

NOTE 1 tWCK2DQO(max) is applied tWCK2DQO_LF(max) or tWCK2DQO_HF(max) depending on MR18 OP[3]: WCK Frequency Mode setting.
MR18 OP[3]=0_B: tWCK2DQO_LF(max)
MR18 OP[3]=1_B: tWCK2DQO_HF(max)

NOTE 2 Use RDQS_t as input Enable: Write Link ECC: MR22 OP[5:4]=01_B or FIFO RDQS Training: MR46 OP[2]=1_B or -Read/Write-based WCK-RDQS_training mode: MR26 OP[7]=1_B.

NOTE 3 Use RDQS_t as input Enable can be supported for CKR=4:1 on

8.3 CAS Command Timing Constraints

Table 337 - CAS(WS_FS) Command Timing Constraints

Current Command	Next Command	Timing Constraints (nCK)		Note
		Min	Max	
CAS (WS_FS=1, WS_WR=0, WS_RD=0)	POWER DOWN ENTRY (PDE)	tCMDPD	-	
	ACTIVATE-1 (ACT-1)	1	-	
	ACTIVATE-2 (ACT-2)	1	-	2
	PRECHARGE (PRE) (Per Bank, All Banks)	1	-	
	REFRESH (REF) (Per Bank, All Banks)	1	-	
	MASK WRITE (MWR)	1	-	5
	WRITE (WR/WR16/WR32)	1	-	5
	READ (RD/RD16/RD32)	1	-	5
	CAS (WS_WR)	illegal	illegal	1
	CAS (WS_RD)	illegal	illegal	1
	CAS (WS_FS)	illegal	illegal	1
	CAS (WS_OFF)	6	-	4, 5
	CAS (DC0-3)	2	-	
	CAS (WRX)	2	-	
	CAS (B3)	2	-	
	MULTI PURPOSE COMMAND (MPC)	1	-	
	SELF REFRESH ENTRY (SRE)	1	-	
	SELF REFRESH EXIT (SRX)	1	-	
	DEEP SLEEP MODE ENTRY (SRE w/ DSM=H)	tCMDPD	-	
	MODE REGISTER WRITE-1 (MRW-1)	1	-	
	MODE REGISTER WRITE-2 (MRW-2)	illegal	illegal	
	MODE REGISTER READ (MRR)	1	-	5
	WRITE FIFO (WFF)	1	-	5
	READ FIFO (RFF)	1	-	5
	READ DQ CALIBRATION (RDC)	1	-	5

Note 1. Duplicated WCK2CK SYNC initiation is illegal.
Note 2. It is illegal unless an ACT-1 command is issued before the current command (CAS-WS_FS).
Note 3. When CAS-FAST_SYNC (WS_FS=1, WS_WR=0, WS_RD=0) is issued, other CAS operands (DC0-3, WRX, B3) shall be “0”.
Note 4. Max(tWCKENL_FS + tWCKPRE_Static) = 6nCK
Note 5. Valid WCK input is required until next command is issued. CAS(WS_OFF) should be

issued to terminate WCK2CK SYNC operation started by current command, CAS(WS_FS) if not followed by Mask Write, Write, Read, MRR, WFF, RFF or RDC.

Table 338 - CAS(WS_WR) Command Timing Constraints

Current Command	Next Command	Timing Constraints (nCK)		Note
		Min	Max	
CAS (WS_WR=1, WS_FS=0, WS_RD=0)	POWER DOWN ENTRY (PDE)	illegal	illegal	
	ACTIVATE-1 (ACT-1)	illegal	illegal	
	ACTIVATE-2 (ACT-2)	illegal	illegal	
	PRECHARGE (PRE) (Per Bank, All Banks)	illegal	illegal	
	REFRESH (REF) (Per Bank, All Banks)	illegal	illegal	
	MASK WRITE (MWR)	1	1	2
	WRITE (WR/WR16/WR32)	1	1	2
	READ (RD/RD16/RD32)	illegal	illegal	
	CAS (WS_WR)	illegal	illegal	
	CAS (WS_RD)	illegal	illegal	
	CAS (WS_FS)	illegal	illegal	
	CAS (WS_OFF)	illegal	illegal	
	CAS (DC0-3)	illegal	illegal	
	CAS (WRX)	illegal	illegal	
	CAS (B3)	illegal	illegal	
	MULTI PURPOSE COMMAND (MPC)	illegal	illegal	
	SELF REFRESH ENTRY (SRE)	illegal	illegal	
	SELF REFRESH EXIT (SRX)	illegal	illegal	
	DEEP SLEEP MODE ENTRY (SRE w/ DSM=H)	illegal	illegal	
	MODE REGISTER WRITE-1 (MRW-1)	illegal	illegal	
	MODE REGISTER WRITE-2 (MRW-2)	illegal	illegal	
	MODE REGISTER READ (MRR)	illegal	illegal	
	WRITE FIFO (WFF)	1	1	
	READ FIFO (RFF)	illegal	illegal	
	READ DQ CALIBRATION (RDC)	illegal	illegal	

Note 1. A CAS(WS_WR) command shall be followed by a MWR/WR/WR16/WR32/WFF command immediately without any command in between.
Note 2. When CAS(WS_WR=1, WS_RD=0, WS_FS=0) is issued, CAS operands (DC0-3 or WRX) can be applied together. Another CAS operand (B3) shall be “0”.

Table 339 - CAS(WS_RD) Command Timing Constraints

Current Command	Next Command	Timing Constraints (nCK)		Note
		Min	Max	
CAS (WS_RD=1, WS_WR=0, WS_FS=0)	POWER DOWN ENTRY (PDE)	illegal	illegal	
	ACTIVATE-1 (ACT-1)	illegal	illegal	
	ACTIVATE-2 (ACT-2)	illegal	illegal	
	PRECHARGE (PRE) (Per Bank, All Banks)	illegal	illegal	
	REFRESH (REF) (Per Bank, All Banks)	illegal	illegal	
	MASK WRITE (MWR)	illegal	illegal	
	WRITE (WR/WR16/WR32)	illegal	illegal	
	READ (RD/RD16/RD32)	1	1	2
	CAS (WS_WR)	illegal	illegal	
	CAS (WS_RD)	illegal	illegal	
	CAS (WS_FS)	illegal	illegal	
	CAS (WS_OFF)	illegal	illegal	
	CAS (DC0-3)	illegal	illegal	
	CAS (WRX)	illegal	illegal	
	CAS (B3)	illegal	illegal	
	MULTI PURPOSE COMMAND (MPC)	illegal	illegal	
	SELF REFRESH ENTRY (SRE)	illegal	illegal	
	SELF REFRESH EXIT (SRX)	illegal	illegal	
	DEEP SLEEP MODE ENTRY (SRE w/ DSM=H)	illegal	illegal	
	MODE REGISTER WRITE-1 (MRW-1)	illegal	illegal	
	MODE REGISTER WRITE-2 (MRW-2)	illegal	illegal	
	MODE REGISTER READ (MRR)	1	1	
	WRITE FIFO (WFF)	illegal	illegal	
	READ FIFO (RFF)	1	1	
	READ DQ CALIBRATION (RDC)	1	1	

Note 1. A CAS(WS_RD) command shall be followed by a MRR/RD/RD16/RD32/RFF/RDC command immediately without any command in between.
Note 2. When CAS(WS_RD=1, WS_WR=0, WS_FS=0) is issued, CAS operands (B3) can be applied together. Other CAS operands (DC0-3, WRX) shall be “0”.

Table 340 - CAS(WS_OFF) Command Timing Constraints

Current Command	Next Command	Timing Constraints (nCK)		Note
		Min	Max	
CAS (WS_OFF: WS_FS=1, WS_WR=1, WS_RD=1)	POWER DOWN ENTRY (PDE)	tCMDPD	-	
	ACTIVATE-1 (ACT-1)	1	-	
	ACTIVATE-2 (ACT-2)	1	-	1
	PRECHARGE (PRE) (Per Bank, All Banks)	1	-	
	REFRESH (REF) (Per Bank, All Banks)	1	-	
	MASK WRITE (MWR)	illegal	illegal	
	WRITE (WR/WR16/WR32)	illegal	illegal	
	READ (RD/RD16/RD32)	illegal	illegal	
	CAS (WS_WR)	3	-	
	CAS (WS_RD)	3	-	
	CAS (WS_FS)	3	-	
	CAS (WS_OFF)	illegal	-	
	CAS (DC0-3)	3	-	2
	CAS (WRX)	3	-	
	CAS (B3)	3	-	2
	MULTI PURPOSE COMMAND (MPC)	1	-	
	SELF REFRESH ENTRY (SRE)	1	-	
	SELF REFRESH EXIT (SRX)	1	-	
	DEEP SLEEP MODE ENTRY (SRE w/ DSM=H)	tCMDPD	-	
	MODE REGISTER WRITE-1 (MRW-1)	1	-	
	MODE REGISTER WRITE-2 (MRW-2)	illegal	illegal	
	MODE REGISTER READ (MRR)	illegal	illegal	
	WRITE FIFO (WFF)	illegal	illegal	
	READ FIFO (RFF)	illegal	illegal	
	READ DQ CALIBRATION (RDC)	illegal	illegal	

Note 1 It is illegal unless an ACT-1 command is issued before the current command (CAS-WS_FS).
Note 2 New WCK2CK SYNC should be initiated together. If not, it is illegal.

Table 341 - CAS(DC0-3), CAS(WRX) Command Timing Constraints

Current Command	Next Command	Timing Constraints (nCK)		Note
		Min	Max	
CAS (DC0-3) or CAS (WRX)	POWER DOWN ENTRY (PDE)	illegal	illegal	
	ACTIVATE-1 (ACT-1)	illegal	illegal	
	ACTIVATE-2 (ACT-2)	illegal	illegal	
	PRECHARGE (PRE) (Per Bank, All Banks)	illegal	illegal	
	REFRESH (REF) (Per Bank, All Banks)	illegal	illegal	
	MASK WRITE (MWR)	illegal	illegal	
	WRITE (WR/WR16/WR32)	1	1	1, 2
	READ (RD/RD16/RD32)	illegal	illegal	
	CAS (WS_WR)	illegal	illegal	3
	CAS (WS_RD)	illegal	illegal	3
	CAS (WS_FS)	illegal	illegal	3
	CAS (WS_OFF)	illegal	illegal	
	CAS (DC0-3)	illegal	illegal	
	CAS (WRX)	illegal	illegal	
	CAS (B3)	illegal	illegal	
	MULTI PURPOSE COMMAND (MPC)	illegal	illegal	
	SELF REFRESH ENTRY (SRE)	illegal	illegal	
	SELF REFRESH EXIT (SRX)	illegal	illegal	
	DEEP SLEEP MODE ENTRY (SRE w/ DSM=H)	illegal	illegal	
	MODE REGISTER WRITE-1 (MRW-1)	illegal	illegal	
	MODE REGISTER WRITE-2 (MRW-2)	illegal	illegal	
	MODE REGISTER READ (MRR)	illegal	illegal	
	WRITE FIFO (WFF)	illegal	illegal	
	READ FIFO (RFF)	illegal	illegal	
	READ DQ CALIBRATION (RDC)	illegal	illegal	

Note 1. Data Copy and WRITE X functions are mutually exclusive.
Note 2. CAS(DC0-3) or CAS(WRX) command should be followed by a WRITE command (WR/WR16/WR32) immediately without any command in between.
Note 3. WCK2CK SYNC should be initiated before issuing CAS(DC0-3). Duplicated CAS-WCK2CK SYNC initiation is illegal.

Table 342 - CAS(B3) Command Timing Constraints

Current Command	Next Command	Timing Constraints (nCK)		Note
		Min	Max	
CAS (B3=1)	POWER DOWN ENTRY (PDE)	illegal	illegal	
	ACTIVATE-1 (ACT-1)	illegal	illegal	
	ACTIVATE-2 (ACT-2)	illegal	illegal	
	PRECHARGE (PRE) (Per Bank, All Banks)	illegal	illegal	
	REFRESH (REF) (Per Bank, All Banks)	illegal	illegal	
	MASK WRITE (MWR)	illegal	illegal	
	WRITE (WR/WR16/WR32)	illegal	illegal	
	READ (RD/RD16/RD32)	1	1	2
	CAS (WS_WR)	illegal	illegal	
	CAS (WS_RD)	illegal	illegal	
	CAS (WS_FS)	illegal	illegal	
	CAS (WS_OFF)	illegal	illegal	
	CAS (DC0-3)	illegal	illegal	
	CAS (WRX)	illegal	illegal	
	CAS (B3)	illegal	illegal	
	MULTI PURPOSE COMMAND (MPC)	illegal	illegal	
	SELF REFRESH ENTRY (SRE)	illegal	illegal	
	SELF REFRESH EXIT (SRX)	illegal	illegal	
	DEEP SLEEP MODE ENTRY (SRE w/ DSM=H)	illegal	illegal	
	MODE REGISTER WRITE-1 (MRW-1)	illegal	illegal	
	MODE REGISTER WRITE-2 (MRW-2)	illegal	illegal	
	MODE REGISTER READ (MRR)	illegal	illegal	1
	WRITE FIFO (WFF)	illegal	illegal	
	READ FIFO (RFF)	illegal	illegal	1
	READ DQ CALIBRATION (RDC)	illegal	illegal	1

Note 1. Burst Start Address (B3) is not valid in MRR, RFF and RDC operations.
Note 2. CAS(B3) command should be followed by a READ command (RD/RD16/RD32) immediately without any command in between.

Table 343 - CAS(WS_FS), CAS(WS_WR), CAS(WS_RD), CAS(WS_OFF) Command Timing Constraints

Current Command	Next Command	Timing Constraints (nCK)		Note
		Min	Max	
POWER DOWN ENTRY (PDE)	CAS(WS_FS) or CAS(WS_WR) or CAS(WS_RD) or CAS(WS_OFF)	illegal	illegal	
ACTIVATE-1 (ACT-1)		1	-	
ACTIVATE-2 (ACT-2)		1	-	
PRECHARGE (PRE) (Per Bank, All Banks)		1	-	
REFRESH (REF) (Per Bank, All Banks)		1	-	
MASK WRITE (MWR)		WL + BL/n_max + RD(tWCKPST/tCK) + 1	-	2
WRITE (WR/WR16/WR32)		WL + BL/n_max + RD(tWCKPST/tCK) + 1	-	2
READ (RD/RD16/RD32)		RL + BL/n_max + RD(tWCKPST/tCK) + 1	-	2
CAS (WS_WR)		illegal	illegal	3
CAS (WS_RD)		illegal	illegal	3
CAS (WS_FS)		illegal	illegal	3
CAS (WS_OFF)		3	-	1, 11
CAS (DC0-3)		illegal	illegal	3, 4
CAS (WRX)		illegal	illegal	3, 4
CAS (B3)		illegal	illegal	3, 4
MULTI PURPOSE COMMAND (MPC)		1	-	
SELF REFRESH ENTRY (SRE)		1	-	
SELF REFRESH EXIT (SRX)		tXSR	-	
DEEP SLEEP MODE ENTRY (SRE w/ DSM=H)		illegal	illegal	
MODE REGISTER WRITE-1 (MRW-1)		illegal	illegal	
MODE REGISTER WRITE-2 (MRW-2)		tMRD	-	
MODE REGISTER READ (MRR)		RL + BL/n_max + RD(tWCKPST/tCK) + 1	-	2
WRITE FIFO (WFF)		Max[(WL + BL/n_max + **RU**(tWTR/tCK) -1), (WL + BL/n_max + RD(tWCKPST/tCK) + 1)]	-	2, 5, 8, 10
READ FIFO (RFF)		Max[(tRTRRD-1), (RL + BL/n_max + RD(tWCKPST/tCK) + 1)] or Max[(tRTW-1),(RL + BL/n_max + RD(tWCKPST/tCK) + 1)]	-	2, 6, 9, 10

READ DQ CALIBRATION (RDC)		Max[(tRTRRD-1), (RL + BL/n_max + RD(tWCKPST/tCK) + 1)]	-	2, 7, 9, 10

Note 1. Duplicated WCK2CK SYNC OFF is illegal.
Note 2. WCK2CK SYNC automatic off timing delay from a current command (RD, WR, MWR, MRR, WFF, RFF, RDC) is “WL (or RL) + BL/n_max + RD(tWCKPST/tCK)”.
Note 3. Duplicated WCK2CK SYNC initiation is illegal.
Note 4. WCK2CK SYNC should be initiated together or before issuing CAS(DC0-3) or CAS(WRX) or CAS(B3) command.
Note 5. Write (WR, WR16/32, MWR), Read (RD, RD16/32), MRR and RDC are not allowed. The min timing is applied to “CAS-WS_FS/WS_RD + RFF” only.
Note 6. “tRTRRD-1” timing (min) is applied to “CAS(WS_FS/WS_RD) + RD/MRR/RDC” or “CAS(WS_FS/WS_WR) + WR/MWR”. “tRTW-1” timing(min) is applied in case of “CAS(WS_FS/WS_WR) + WFF”.
Note 7. “CAS(WS_FS/WS_RD) + RFF” is not allowed.
Note 8. For CAS(WS_OFF), the min timing should be “WL + BL/n_max + RD(tWCKPST/tCK) + 1”.
Note 9. For CAS(WS_OFF), the min timing should be “RL + BL/n_max + RD(tWCKPST/tCK) + 1”.
Note 10. Refer to Timing Constraints for Training Commands.
Note 11. CAS(WS_OFF) to CAS(WS_OFF) is illegal. Refer to CAS (WS_OFF) Command Timing Constraints.

Table 344 - CAS(DC0-3), CAS(WRX) Command Timing Constraints

Current Command	Next Command	Timing Constraints (nCK)		Note
		Min	Max	
POWER DOWN ENTRY (PDE)	CAS(DC0-3) or CAS(WRX)	illegal	illegal	
ACTIVATE-1 (ACT-1)		1	-	
ACTIVATE-2 (ACT-2)		1	-	
PRECHARGE (PRE) (Per Bank, All Banks)		1	-	
REFRESH (REF) (Per Bank, All Banks)		1	-	
MASK WRITE (MWR)		BL/n -1	-	1
WRITE (WR/WR16/WR32)		BL/n - 1	-	1
READ (RD/RD16/RD32)		RL + BL/n_max + RU(tWCK2DQO(max) /tCK) – WL –1	-	1, 3, 4
CAS (WS_WR)		illegal	illegal	
CAS (WS_RD)		illegal	illegal	
CAS (WS_FS)		2	TBD	
CAS (WS_OFF)		**3**	-	2
CAS (DC0-3)		illegal	illegal	
CAS (WRX)		illegal	illegal	
CAS (B3)		illegal	illegal	
MULTI PURPOSE COMMAND (MPC)		1	-	
SELF REFRESH ENTRY (SRE)		illegal	illegal	
SELF REFRESH EXIT (SRX)		**tXSR**	-	
DEEP SLEEP MODE ENTRY (SRE w/ DSM=H)		illegal	illegal	
MODE REGISTER WRITE-1 (MRW-1)		illegal	illegal	
MODE REGISTER WRITE-2 (MRW-2)		**tMRD**	-	
MODE REGISTER READ (MRR)		RL + BL/n_max + RU(tWCK2DQO(max) /tCK) - WL + 1	-	1
WRITE FIFO (WFF)		illegal	illegal	1
READ FIFO (RFF)		tRTRRD - 1	-	1
READ DQ CALIBRATION (RDC)		tRTRRD - 1	-	1

Note 1. Refer to LPDDR5 command timing constraints.
Note 2. New WCK2CK SYNC should be initiated together with CAS(DC0-3) or CAS(WRX). If not, it is illegal.
Note 3. In case of DQ ODT enabled, READ-CAS(DC0-3/WRX) min timing should be “RL + BL/n_max + RU(tWCK2DQO(max) /tCK) – ODTLon – RD(tODTon(min)/tCK)”.
Note 4. “RL + BL/n_min + RU(tWCK2DQO(max) /tCK) – WL –1” is applied in case of different Banks in different Bank Groups @ BG mode. Refer to LPDDR5 READ-WRITE command timing constraints.

Note 5. Data Copy and WRITE X functions are mutually exclusive.

Table 345 - CAS(B3) Command Timing Constraints

Current Command	Next Command	Timing Constraints (nCK)		Note
		Min	Max	
POWER DOWN ENTRY (PDE)	CAS(B3)	illegal	illegal	
ACTIVATE-1 (ACT-1)		1	-	
ACTIVATE-2 (ACT-2)		1	-	
PRECHARGE (PRE) (Per Bank, All Banks)		1	-	
REFRESH (REF) (Per Bank, All Banks)		1	-	
MASK WRITE (MWR)		WL + BL/n_max + RU(tWTR/tCK) - 1	-	1, 3, 4
WRITE (WR/WR16/WR32)		WL + BL/n_max + RU(tWTR/tCK) - 1	-	1, 3, 4
READ (RD/RD16/RD32)		BL/n -1	-	1
CAS (WS_WR)		illegal	illegal	
CAS (WS_RD)		illegal	illegal	
CAS (WS_FS)		2	TBD	
CAS (WS_OFF)		3	-	2
CAS (DC0-3)		illegal	illegal	
CAS (WRX)		illegal	illegal	
CAS (B3)		illegal	illegal	
MULTI PURPOSE COMMAND (MPC)		1	-	
SELF REFRESH ENTRY (SRE)		illegal	illegal	
SELF REFRESH EXIT (SRX)		tXSR	-	
DEEP SLEEP MODE ENTRY (SRE w/ DSM=H)		illegal	illegal	
MODE REGISTER WRITE-1 (MRW-1)		illegal	illegal	
MODE REGISTER WRITE-2 (MRW-2)		tMRD	-	
MODE REGISTER READ (MRR)		RL + BL/n_max + RD(tWCKPST/tCK) + 1	-	1
WRITE FIFO (WFF)		illegal	illegal	1
READ FIFO (RFF)		tRTRRD - 1	-	1
READ DQ CALIBRATION (RDC)		tRTRRD - 1	-	1

Note 1. Refer to LPDDR5 command timing constraints.
Note 2. New WCK2CK SYNC should be initiated together with CAS(B3). If not, it is illegal.
Note 3. tWTR in 8B/16B modes, tWTR_S in case of different BG in a BG mode, tWTR_L in case of same BG in a BG mode.
Note 4. “WL + BL/n_min + RU(tWTR/tCK) –1” is applied in case of different Banks in different Bank Groups @ BG mode. Refer to LPDDR5 WRITE-READ command timing constraints.

Table 346 – CAS(WCKSUS) Command Timing Constraints

Current Command	Next Command	Timing Constraints (nCK)		Note
		Min	Max	
CAS(WCKSUS)	POWER DOWN ENTRY (PDE)	1	-	
	ACTIVATE-1 (ACT-1)	1	-	
	ACTIVATE-2 (ACT-2)	1	-	
	PRECHARGE (PRE) (Per Bank, All Banks)	1	-	
	REFRESH (REF) (Per Bank, All Banks)	1	-	
	MASK WRITE (MWR)	4	-	
	WRITE (WR/WR16/WR32)	4	-	
	READ (RD/RD16/RD32)	4	-	
	CAS (WS_WR)	illegal	illegal	2
	CAS (WS_RD)	illegal	illegal	2
	CAS (WS_FS)	illegal	illegal	2
	CAS (WS_OFF)	1	-	
	CAS (DC0-3)	3	-	
	CAS (WRX)	3	-	
	CAS (B3)	3	-	
	MULTI PURPOSE COMMAND (MPC)	1	-	
	SELF REFRESH ENTRY (SRE)	1	-	
	SELF REFRESH EXIT (SRX)	illegal	illegal	
	DEEP SLEEP MODE ENTRY (SRE w/ DSM=H)	1	-	
	MODE REGISTER WRITE-1 (MRW-1)	1	-	
	MODE REGISTER WRITE-2 (MRW-2)	illegal	illegal	
	MODE REGISTER READ (MRR)	4	-	
	WRITE FIFO (WFF)	illegal	illegal	
	READ FIFO (RFF)	illegal	illegal	
	READ DQ CALIBRATION (RDC)	illegal	illegal	

Note 1. CAS(WCKSUS) command is valid only when MR0 OP[2]=1_B (Enhanced WCK Always On mode supported) and MR18 OP[4]= 1_B (WCK Always On mode enabled).
Note 2. Duplicated WCK2CK SYNC initiation is illegal.
Note 3. Command timing delay between the previous command of CAS(WCKSUS) and “Next Command” should be compliant to LPDDR5 command timing constraints.

Table 347 - CAS(WCKSUS) Command Timing Constraints

Current Command	Next Command	Timing Constraints (nCK)		Note
		Min	Max	
POWER DOWN ENTRY (PDE)	CAS(WCKSUS)	illegal	illegal	
ACTIVATE-1 (ACT-1)		1	-	
ACTIVATE-2 (ACT-2)		1	-	
PRECHARGE (PRE) (Per Bank, All Banks)		1	-	
REFRESH (REF) (Per Bank, All Banks)		1	-	
MASK WRITE (MWR)		WL + BL/n_max + RD(tWCKPST/tCK) + 1	-	
WRITE (WR/WR16/WR32)		WL + BL/n_max + RD(tWCKPST/tCK) + 1	-	
READ (RD/RD16/RD32)		RL + BL/n_max + RD(tWCKPST/tCK) + 1	-	
CAS (WS_WR)		illegal	illegal	
CAS (WS_RD)		illegal	illegal	
CAS (WS_FS)		tWCKENL_FS + tWCKPRE_Static + 2	-	
CAS (WS_OFF)		illegal	illegal	
CAS (DC0-3)		illegal	illegal	
CAS (WRX)		illegal	illegal	
CAS (B3)		illegal	illegal	
MULTI PURPOSE COMMAND (MPC)		1	-	
SELF REFRESH ENTRY (SRE)		illegal	illegal	
SELF REFRESH EXIT (SRX)		illegal	illegal	
DEEP SLEEP MODE ENTRY (SRE w/ DSM=H)		illegal	illegal	
MODE REGISTER WRITE-1 (MRW-1)		illegal	illegal	
MODE REGISTER WRITE-2 (MRW-2)		tMRD	-	
MODE REGISTER READ (MRR)		RL + BL/n_max + RD(tWCKPST/tCK) + 1	-	
WRITE FIFO (WFF)		illegal	illegal	
READ FIFO (RFF)		RL + BL/n_max + RD(tWCKPST/tCK) + 1	-	
READ DQ CALIBRATION (RDC)		RL + BL/n_max + RD(tWCKPST/tCK) + 1	-	

Note 1. CAS(WCKSUS) command is valid only when MR0 OP[2]=1_B (Enhanced WCK Always On mode supported) and MR18 OP[4]= 1_B (WCK Always On mode enabled).

8.4 Training related timing constraints

LPDDR5-SDRAMs can be entered Read or Write training state by issuing such as WRITE FIFO, READ FIFO and READ DQ Calibration. For those training commands that Read or Write the SDRAM, read latency (RL) and write latency (WL) are counted from the rising CK edge of each training command with the same timing relationship as any normal Read or Write command. Also, WCK synchronization should be applied in a same manner as normal Read or Write operation. WRITE FIFO, READ FIFO and READ DQ Calibration have a command burst length 16 regardless of bankgroup, 16bank or 8bank mode.

Table 348 —Training-Related Timing Constraints

Previous Command	Next Command	Min Delay	Unit	Note
WR/WR32/MWR/WRX	WRITE FIFO	tWRWTR	nCK	1,5
	READ FIFO	Not Allowed	-	2
	READ DQ Calibration	WL+BL/n_max +RU(tWTR/tCK)	nCK	5
RD/RD32/MRR	WRITE FIFO	tRTRRD	nCK	3,5
	READ FIFO	Not Allowed	-	2
	READ DQ Calibration	tRTRRD	nCK	3,5
WRITE FIFO	WR/WR32/MWR/WRX	Not Allowed	-	2
	WRITE FIFO	2 @ CK:WCK=1:4 4 @ CK:WCK=1:2	nCK	
	RD/RD32/MRR	Not Allowed	-	2
	READ FIFO	WL+BL/n_max +RU(tWTR/tCK)	nCK	5
	READ DQ Calibration	Not Allowed	-	2
READ FIFO	WR/WR32/MWR/WRX	tRTRRD	nCK	3,5
	WRITE FIFO	tRTW	nCK	4,5,6
	RD/RD32/MRR	tRTRRD	nCK	3,5
	READ FIFO	2 @ CK:WCK=1:4 4 @ CK:WCK=1:2	nCK	
	READ DQ Calibration	tRTRRD	nCK	3,5
READ DQ Calibration	WR/WR32/MWR/WRX	tRTRRD	nCK	3,5
	WRITE FIFO	tRTRRD	nCK	3,5
	RD/RD32/MRR	tRTRRD	nCK	3,5
	READ FIFO	Not Allowed	-	2
	READ DQ Calibration	2 @ CK:WCK=1:4 4 @ CK:WCK=1:2	nCK	

NOTE 1 tWRWTR = WL + BL/n_max + MAX[RU7.5ns/tCK],4nCK]
NOTE 2 No commands are allowed between WRITE FIFO and READ FIFO except MRW commands related to training parameter and CAS command related with WCK2CK SYNC operation.
NOTE 3 tRTRRD = RL + BL/n_max + MAX[RU(7.5ns/tCK),4nCK
NOTE 4 tRTW is TBD and has different value based on ODT state.
NOTE 5 CAS command may be needed for WCK sync prior to "Next Command"
NOTE 6 In BG mode, tRTW applies the value of the table named “Different Banks in Different Bank Group (BG Mode)”.

8.5 MRR/MRW Timing Constraints

Table 349 - MRR/MRW Timing Constraints: DQ ODT and NT-ODT is Disable

From Command	To Command	Minimum Delay between "From Command" and "To Command"	Unit	Note
MRR	MRR	tMRR		2
	RD/RDA	RL +BL/n_max + RD(tWCKPST/tCK) +2		2
	WR/WRA/MWR/MWRA	tRTW + 2	nCK	1,3
	MRW	RL +BL/n_max+ Max[RU(tWCKDQO(max)/tCK), RD(tWCKPST(max)/tCK)] + 2	nCK	1
RD/RDA	MRR	RL +BL/n_max + RD(tWCKPST/tCK) +2	nCK	1
WR/WRA/MWR/MWRA		WL+BL/n_max +RU(tWTR/tCK)	nCK	1,2,4
MRW		tMRD		
Power Down Exit		tXP + tMRRI		
MRW	RD/RDA	tMRD		
	WR/WRA/MWR/MWRA	tMRD		
	MRW	tMRW		
RD/RD FIFO/RD DQ CAL	MRW	RL+RU(tWCKDQO(max)/tCK)+BL/n_max+MAX[RU(7.5 ns/tCK),4nCK]	nCK	1,2
RD with Auto-Precharge		RL+ RU(tWCKDQO(max)/tCK)+BL/n_max +MAX[RU(7.5ns/tCK),4nCK] +nRBTP	nCK	1,2
WR/MWR/WR FIFO		WL+BL/n_max +MAX[RU(7.5ns/tCK),4nCK]	nCK	1,2
WR/MWR with Auto-Precharge		WL+BL/n_max +MAX[RU(7.5ns/tCK),4nCK]+nWR	nCK	1,2

NOTE 1 The timing variable “BL/n” and “BL/n_max” are defined by the previous command and shown in the effective burst length table.

NOTE 2 CAS command may be needed for WCK sync prior to "To Command"

NOTE 3 The Mode Register Read to Write Timing varies depending on an enhanced NT-ODT control (MR0 OP[0]), Bank/Bank Group Organization (MR3 OP[4:3]), WCK to CK frequency ratio (MR18: OP[7]), DQ Bus Receiver On-Die-Termination (MR11 OP[2:0]), Non-Target DQ Bus Receiver On-Die-Termination (MR41 OP[7:5]), Read DQS (MR20 OP[1:0]), Write link ECC Control (MR22 OP[5:4]), WCK-RDQS_t/Parity Training (MR46 OP[2]), and Read/Write-based WCK-RDQS_training mode (MR26 OP[7]). Refer to the Command Constraint and AC timing section about the Read to Write Timing (tRTW).

NOTE 4 Refer to Core timing table about tWTR. And in BG mode, “tWTR” shall be replaced with “tWTR_L.”

Table 350 - MRR/MRW Timing Constraints: DQ ODT is Enable and NT-ODT Disable

From Command	To Command	Minimum Delay between "From Command" and "To Command"	Unit	Note
MRR	MRR	Same as ODT/NT-ODT Disable Case		
	RD/RDA	Same as ODT/NT-ODT Disable Case		
	WR/WRA/MWR/MWRA	tRTW + 2	nCK	1,2
	MRW	Same as ODT/NT-ODT Disable Case		
RD/RDA	MRR	Same as ODT/NT-ODT Disable Case		
WR/WRA/MWR/MWRA				
MRW				
Power Down Exit				
MRW	RD/RDA	Same as ODT/NT-ODT Disable Case		
	WR/WRA/MWR/MWRA			
	MRW			
RD/RD FIFO/RD DQ CAL	MRW	Same as ODT/NT-ODT Disable Case		
RD with Auto-Precharge				
WR/MWR/WR FIFO				
WR/MWR with Auto-Precharge				

NOTE 1 The timing variable "BL/n_max" is defined by the previous command and shown in the effective burst length table.

NOTE 2 The Mode Register Read to Write Timing varies depending on an enhanced NT-ODT control (MR0 OP[0]), Bank/Bank Group Organization (MR3 OP[4:3]), WCK to CK frequency ratio (MR18: OP[7]), DQ Bus Receiver On-Die-Termination (MR11 OP[2:0]), Non-Target DQ Bus Receiver On-Die-Termination (MR41 OP[7:5]), Read DQS (MR20 OP[1:0]), Write link ECC Control (MR22 OP[5:4]), WCK-RDQS_t/Parity Training (MR46 OP[2]), and Read/Write-based WCK-RDQS_training mode (MR26 OP[7]). Refer to the Command Constraint and AC timing section about the Read to Write Timing (tRTW).

Table 351 - MRR/MRW Timing Constraints: DQ ODT is Enable and NT-ODT Enable

From Command	To Command	Minimum Delay between "From Command" and "To Command"	Unit	Note
MRR	MRR	Same as ODT/NT-ODT Disable Case		
	RD/RDA	Same as ODT/NT-ODT Disable Case		
	WR/WRA/MWR/MWRA	tRTW + 2	nCK	1,2
	MRW	Same as ODT/NT-ODT Disable Case		3
RD/RDA	MRR	Same as ODT/NT-ODT Disable Case		
WR/WRA/MWR/MWRA				
MRW				
Power Down Exit				
MRW	RD/RDA	Same as ODT/NT-ODT Disable Case		
	WR/WRA/MWR/MWRA			
	MRW			
RD/RD FIFO/RD DQ CAL	MRW	Same as ODT/NT-ODT Disable Case		
RD with Auto-Precharge				
WR/MWR/WR FIFO				
WR/MWR with Auto-Precharge				

NOTE 1 The timing variable "BL/n_max" is defined by the previous command and shown in the effective burst length table.

NOTE 2 The Mode Register Read to Write Timing varies depending on an enhanced NT-ODT control (MR0 OP[0]), Bank/Bank Group Organization (MR3 OP[4:3]), WCK to CK frequency ratio (MR18: OP[7]), DQ Bus Receiver On-Die-Termination (MR11 OP[2:0]), Non-Target DQ Bus Receiver On-Die-Termination (MR41 OP[7:5]), Read DQS (MR20 OP[1:0]), Write link ECC Control (MR22 OP[5:4]), WCK-RDQS_t/Parity Training (MR46 OP[2]), and Read/Write-based WCK-RDQS_training mode (MR26 OP[7]). Refer to the Command Constraint and AC timing section about the Read to Write Timing (tRTW).

NOTE 3 If changing MR which affects data output condition and/or timing, the delay time from MRR to MRW applies an equation as follows. Refer to Table 352 a specific MR bits.
CKR=4:1:
RL+BL/n_max+Max[RU(tWCKDQO(max)/tCK),RD(tWCKPST(max)/tCK)]+RU(ODT_RDon(max))+2
CKR=2:1:
RL+BL/n_max+Max[RU(tWCKDQO(max)/tCK),RD(tWCKPST(max)/tCK)]+RU(ODT_RDon(max))+3

Table 352 - MR# and Operand which are affected data output condition and/or timing

Function	MR# & Operand
RL & nRTP	MR2 OP[3:0]
PDDS	MR3 OP[2:0]
BK/BG ORG	MR3 OP[4:3]
DBI-RD	MR3 OP[6]
DBI-WR	MR3 OP[7]
RPST Mode	MR10 OP[0]
WCK PST	MR10 OP[3:2]
RDQS PRE	MR10 OP[5:4]
RDQS PST	MR10 OP[7:6]
NT ODT	MR11 OP[3]
DMI Mode select	MR13 OP[4]
DMD	MR13 OP[5]
SoC ODT	MR17 OP[2:0]
WCK ODT	MR18 OP[2:0]
WCK FM	MR18 OP[3]
WCK ON	MR18 OP[4]
CKR (WCK to CK frequency ratio)	MR18 OP[7]
RDQS	MR20 OP[1:0]
WCK Mode	MR20 OP[3:2]
RDCFE	MR21 OP[5]
WECC	MR22 OP[5:4]
RECC	MR22 OP[7:6]
Read/Write-based WCK-RDQS_t Training	MR26 OP[7]
NT DQ ODT	MR41 OP[7:5]
WCK-DQS_t/Parity Training	MR46 OP[2]

8.6 Rank to Rank Command Timing Constraints

Table 353 - Command Timing Constraints in case of Different Ranks, "DQ ODT ON and NT-ODT OFF" setting for both ranks, CAS-WS_FS Broadcast ON, Link ECC OFF

Next CMD / Current CMD	READ or RFF or MRR or RDC	WRITE or MASK WRITE or WFF	CAS (WS_WR)	CAS (WS_RD)	CAS (WS_FS)
READ (BL16 or BL32)	BL/n_min + **1**[2] + RU((tRPST+tRPRE – 0.5*tWCK)/tCK)	RL + BL/n_min + RU(tWCK2DQO(max)/tCK) – ODTLon – RD(tODTon(min)/tCK) + 1[4]	illegal	illegal	illegal
RFF or MRR or RDC (BL16)	BL/n_min + **1**[2] + RU((tRPST+tRPRE – 0.5*tWCK)/tCK)	RL + BL/n_min + RU(tWCK2DQO(max)/tCK) – ODTLon – RD(tODTon(min)/tCK) + 1[4]	illegal	illegal	illegal
WRITE (BL16 or BL32)	ODTLoff + RU(tODToff(max)/tCK) – RL[5]	ODTLoff + RU(tODToff(max)/tCK) - ODTLon	illegal	illegal	illegal
MASK WRITE (BL16)	ODTLoff + RU(tODToff(max)/tCK) – RL[5]	ODTLoff + RU(tODToff(max)/tCK) - ODTLon	illegal	illegal	illegal
WFF (BL16)	ODTLoff + RU(tODToff(max)/tCK) – RL[5]	ODTLoff + RU(tODToff(max)/tCK) - ODTLon	illegal	illegal	illegal

NOTE 1 Next command is issued to a different rank.

NOTE 2 RU(tWCK2DQO_rank2rank(max)/tCK) = 1. The same voltage and temperature are applied to multi ranks DQ bytes per channel within a package consisting of the same design dies.

NOTE 3 RD(tWCK2DQO(min)/tCK) = 0.

NOTE 4 In case of Link ECC enabled, an additional RU((tRPST-0.5*tWCK)/tCK) delay should be added because RDQS_t is used for ECC parity input.

NOTE 5 In case of Link ECC enabled, an additional RU(tRPRE/tCK) delay should be added because RDQS_t is used for ECC parity input.

NOTE 6 Rank to Rank command timing constraints in Rank to Rank Command Timing Constraints Table 353 is for LPDDR5 users design and consideration only.

NOTE 7 In case of RDQS disabled (MR20 OP[1:0]=00_B), tRPRE and tRPST delay should be 0.

Table 354 - Command Timing Constraints in case of Different Ranks, "DQ ODT OFF and NT-ODT OFF" setting for both ranks, CAS-WS_FS Broadcast ON, Link ECC OFF

Next CMD / Current CMD	READ or RFF or MRR or RDC	WRITE or MASK WRITE or WFF	CAS (WS_WR)	CAS (WS_RD)	CAS (WS_FS)
READ (BL16 or BL32)	BL/n_min + **1**[2] + RU((tRPST+tRPRE – 0.5*tWCK)/tCK)	RL + BL/n_min + RU(tWCK2DQO(max)/tCK) + RU((tRPST -0.5*tWCK)/tCK) – WL[5]	illegal	illegal	illegal
RFF or MRR or RDC (BL16)	BL/n_min + **1**[2] + RU((tRPST+tRPRE – 0.5*tWCK)/tCK)	RL + BL/n_min + RU(tWCK2DQO(max)/tCK) + RU((tRPST -0.5*tWCK)/tCK) – WL[5]	illegal	illegal	illegal
WRITE (BL16 or BL32)	WL + BL/n_min + 1[3] – RL[6]	BL/n_min +1[4]	illegal	illegal	illegal
MASK WRITE (BL16)	WL + BL/n_min + 1[3] – RL[6]	BL/n_min +1[4]	illegal	illegal	illegal
WFF (BL16)	WL + BL/n_min + 1[3] – RL[6]	BL/n_min +1[4]	illegal	illegal	illegal

NOTE 1 Next command is issued to a different rank.
NOTE 2 RU(tWCK2DQO_rank2rank(max)/tCK) = 1. The same voltage and temperature are applied to multi ranks DQ bytes per channel within a package consisting of the same design dies.
NOTE 3 RU(tWCK2DQI(max)/tCK) = 1.
NOTE 4 RU(tWCK2DQI_rank2rank(max)/tCK) = 1. The same voltage and temperature are applied to multi ranks DQ bytes per channel within a package consisting of the same design dies. If LPDDR5 DFE feature is enabled, an additional timing delay may be required like RU[(tWCK2DQI(max) + tDPRE)/tCK].
NOTE 5 If Link ECC enabled, an additional RU((tRPST-0.5*tWCK)/tCK) delay should be added because RDQS_t is used for ECC parity input.
NOTE 6 If Link ECC enabled, an additional RU(tRPRE/tCK) delay should be added because RDQS_t is used for ECC parity input.
NOTE 7 In case of RDQS disabled (MR20 OP[1:0]=00_B), tRPRE and tRPST delay should be 0.
NOTE 8 Rank to Rank command timing constraints in Table 354 is for LPDDR5 users design and consideration only.

Table 355 - Command Timing Constraints in case of Different Ranks, "DQ ODT ON and NT-ODT OFF" or "DQ ODT ON and NT-ODT ON" setting for both ranks, CAS-WS_FS Broadcast OFF, Link ECC OFF or ON

Next CMD / Current CMD	READ or RFF or MRR or RDC	WRITE or MASK WRITE or WFF	CAS (WS_WR)	CAS (WS_RD)	CAS (WS_FS)
READ (BL16 or BL32)	illegal	illegal	RL + BL/n_max + RU((tWCKPST - 0.5*tWCK)/tCK) – min[(ODTLon + RD(tODTon(min)/tCK)), tWCKENL_WR]	RL + BL/n_max + RU((tWCKPST - 0.5*tWCK)/tCK) – tWCKENL_RD	RL + BL/n_max + RU((tWCKPST - 0.5*tWCK)/tCK) – tWCKENL_FS
RFF or MRR or RDC (BL16)	illegal	illegal	RL + BL/n_max + RU((tWCKPST - 0.5*tWCK)/tCK) – min[(ODTLon + RD(tODTon(min)/tCK)), tWCKENL_WR]	RL + BL/n_max + RU((tWCKPST - 0.5*tWCK)/tCK) – tWCKENL_RD	RL + BL/n_max + RU((tWCKPST - 0.5*tWCK)/tCK) – tWCKENL_FS
WRITE (BL16 or BL32)	illegal	illegal	WL + BL/n_max + max[RU(tODToff(max)/tCK), RU((tWCKPST - 0.5*tWCK)/tCK)] – tWCKELN_WR	WL + BL/n_max + max[RU(tODToff(max)/tCK), RU((tWCKPST - 0.5*tWCK)/tCK)] – tWCKENL_RD	WL + BL/n_max + max[RU(tODToff(max)/tCK), RU((tWCKPST - 0.5*tWCK)/tCK)] – tWCKENL_FS
MASK WRITE or WFF (BL16)	illegal	illegal	WL + BL/n_max + max[RU(tODToff(max)/tCK), RU((tWCKPST - 0.5*tWCK)/tCK)] – tWCKELN_WR	WL + BL/n_max + max[RU(tODToff(max)/tCK), RU((tWCKPST - 0.5*tWCK)/tCK)] – tWCKENL_RD	WL + BL/n_max + max[RU(tODToff(max)/tCK), RU((tWCKPST - 0.5*tWCK)/tCK)] – tWCKENL_FS

NOTE 1 Next command is issued to a different rank.
NOTE 2 Rank to Rank command timing constraints in Table 355 is for LPDDR5 users design and consideration only.

Table 356 - Command Timing Constraints in case of Different Ranks, "DQ ODT OFF and NT-ODT OFF" setting for both ranks, CAS-WS_FS Broadcast OFF, Link ECC OFF or ON

Next CMD / Current CMD	READ or RFF or MRR or RDC	WRITE or MASK WRITE or WFF	CAS (WS_WR)	CAS (WS_RD)	CAS (WS_FS)
READ (BL16 or BL32)	illegal	illegal	RL + BL/n_max + RU((tWCKPST - 0.5*tWCK)/tCK) – tWCKENL_WR	RL + BL/n_max + RU((tWCKPST - 0.5*tWCK)/tCK) – tWCKENL_RD	RL + BL/n_max + RU((tWCKPST - 0.5*tWCK)/tCK) – tWCKENL_FS
RFF or MRR or RDC (BL16)	illegal	illegal	RL + BL/n_max + RU((tWCKPST - 0.5*tWCK)/tCK) – tWCKENL_WR	RL + BL/n_max + RU((tWCKPST - 0.5*tWCK)/tCK) – tWCKENL_RD	RL + BL/n_max + RU((tWCKPST - 0.5*tWCK)/tCK) – tWCKENL_FS
WRITE (BL16 or BL32)	illegal	illegal	WL + BL/n_max + RU((tWCKPST - 0.5*tWCK)/tCK) – tWCKENL_WR	WL + BL/n_max + RU((tWCKPST - 0.5*tWCK)/tCK) – tWCKENL_RD	WL + BL/n_max + RU((tWCKPST - 0.5*tWCK)/tCK) – tWCKENL_FS
MASK WRITE or WFF (BL16)	illegal	illegal	WL + BL/n_max + RU((tWCKPST - 0.5*tWCK)/tCK) – tWCKENL_WR	WL + BL/n_max + RU((tWCKPST - 0.5*tWCK)/tCK) – tWCKENL_RD	WL + BL/n_max + RU((tWCKPST - 0.5*tWCK)/tCK) – tWCKENL_FS

NOTE 1 Next command is issued to a different rank.
NOTE 2 Rank to Rank command timing constraints in Table 356 is for LPDDR5 users design and consideration only.

Table 357 - Command Timing Constraints in case of Different Ranks, "DQ ODT ON and NT-ODT ON" setting for both ranks, CAS-WS_FS Broadcast ON, Link ECC OFF

Next CMD / Current CMD	READ or RFF or MRR or RDC	WRITE or MASK WRITE or WFF	CAS (WS_WR)	CAS (WS_RD)	CAS (WS_FS)
READ (BL16 or BL32)	ODTLon_RD[4] – ODTLoff_RD[4]	RL + BL/n_min + RU(tWCK2DQO(max)/tCK) – ODTLon – RD(tODTon(min)/tCK) + 1[2]	illegal	illegal	illegal
RFF or MRR or RDC (BL16)	ODTLon_RD[4] – ODTLoff_RD[4]	RL + BL/n_min + RU(tWCK2DQO(max)/tCK) – ODTLon – RD(tODTon(min)/tCK) + 1[2]	illegal	illegal	illegal
WRITE (BL16 or BL32)	ODTLoff + RU(tODToff(max)/tCK) – RL[5]	ODTLoff + RU(tODToff(max)/tCK) - ODTLon	illegal	illegal	illegal
MASK WRITE (BL16)	ODTLoff + RU(tODToff(max)/tCK) – RL[5]	ODTLoff + RU(tODToff(max)/tCK) - ODTLon	illegal	illegal	illegal
WFF (BL16)	ODTLoff + RU(tODToff(max)/tCK) – RL[5]	ODTLoff + RU(tODToff(max)/tCK) - ODTLon	illegal	illegal	illegal

NOTE 1 Next command is issued to a different rank.
NOTE 2 In case of MR0 OP[0]=0B (Same DQ & RDQS NT-ODT timing) and/or Link ECC ON, an additional RU((tRPST-0.5*tWCK)/tCK) delay should be added.
NOTE 3 RD(tWCK2DQO(min)/tCK) = 0.
NOTE 4 ODTLon_RD and ODTLoff_RD should be ODTLon_RD_RDQS and ODTLoff_RD_RDQS respectively in case of MR0 OP[0]=1_B.
NOTE 5 In case of MR0 OP[0]=0B (Same DQ & RDQS NT-ODT timing) and/or Link ECC ON, an additional RU(tRPRE/tCK) delay should be added.
NOTE 6 Rank to Rank command timing constraints in Table 357 is for LPDDR5 users design and consideration only.

9 AC Timing

9.1 Core AC Timing Parameters by Speed Grade

The two basic Core AC timing tables and its derivation Core AC timing tables are included this subclause. The SDRAM status for one basic Core AC timing table is x16, DVFSC is disabled and Link ECC is disabled and the SDRAM status for other basic Core AC timing table is x16, DVFSC is enabled and Link ECC is disabled. Byte mode (x8) and/or Link ECC is enabled affects tWR and tWTR value, which is described to the derivation tables.

9.1.1 Timing table for x16, DVFSC Disabled & Write Link ECC Disabled

Table 358 — x16 Core Timing for BG mode: DVFSC Disabled & Write Link ECC Disabled

Item	Symbol	Min/ Max	CK Frequency (MHz) 67	133	200	266	344	400	467	533	600	688	750	800	Unit	Notes
Core Timing for BG mode																
ACTIVATE-to-ACTIVATE command period (same bank)	tRC	Min	tRAS + tRPab with all-bank precharge tRAS + tRPpb with per-bank precharge												-	
RAS-to-CAS delay	tRCD	Min	max(18ns, 2nCK)												-	
Row precharge time (all banks)	tRPab	Min	max(21ns, 2nCK)												-	
Row precharge time (single bank)	tRPpb	Min	max(18ns, 2nCK)												-	
Row active time	tRAS	Min	max(42ns, 3nCK)												-	
		Max	min(9 * tREFI * Refresh Rate, 70.2) µs												-	
WRITE recovery time	tWR	Min	max(34ns, 3nCK)												-	
Active bank-A to active bank-B	tRRD	Min	max(5ns, 2nCK)												-	
Four-bank ACTIVATE window	tFAW	Min	20												ns	
READ Burst end to PRECHARGE command delay	tRBTP	Min	max(7.5ns, 4nCK) – 4nCK(CKR=2:1) max(7.5ns, 2nCK) – 2nCK(CKR=4:1)												-	
WRITE-to-READ delay	tWTR_S	Min	max(6.25ns, 4nCK)												-	
	tWTR_L	Min	max(12ns, 4nCK)												-	
Precharge to Precharge Delay	tPPD	Min	2												nCK	

Table 359 — x16 Core Timing for 16B mode: DVFSC Disabled & Write Link ECC Disabled

Item	Symbol	Min/ Max	CK Frequency (MHz) 67	133	200	266	344	400	467	533	600	688	750	800	Unit	Notes
Core Timing for 16B mode																
WRITE-to-READ delay	tWTR	Min	max(12ns, 4nCK)												-	

NOTE 1 The rest of the Core AC timing is the same as BG mode: Table 358.

Table 360 — x16 Core Timing for 8B mode: DVFSC Disabled & Write Link ECC Disabled

Item	Symbol	Min/ Max	CK Frequency (MHz) 67	133	200	266	344	400	467	533	600	688	750	800	Unit	Notes
Core Timing for 8B mode																
Active bank-A to active bank-B	tRRD	Min	max(10ns, 2nCK)												-	
Four-bank ACTIVATE window	tFAW	Min	40												ns	
WRITE-to-READ delay	tWTR	Min	max(12ns, 4nCK)												-	

NOTE 1 The rest of the Core AC timing is the same as BG mode: Table 358.

9.1.1.1 Timing Table for x8 (Byte Mode) SDRAM

Table 361 — Byte Mode Core Timing for BG mode: DVFSC Disabled & Write Link ECC Disabled

Item	Symbol	Min/ Max	CK Frequency (MHz)												Unit	Notes
			67	133	200	266	344	400	467	533	600	688	750	800		
Core Timing for BG mode																
WRITE recovery time	tWR	Min	max(36ns, 3nCK)												-	
WRITE-to-READ delay	tWTR_S	Min	max(8.25ns, 4nCK)												-	
	tWTR_L	Min	max(14ns, 4nCK)												-	

NOTE 1 The rest of the Core AC timing is the same as BG mode: Table 358.

Table 362 — Byte Mode Core Timing for 16B mode: DVFSC Disabled & Write Link ECC Disabled

Item	Symbol	Min/ Max	CK Frequency (MHz)												Unit	Notes
			67	133	200	266	344	400	467	533	600	688	750	800		
Core Timing for 16B mode																
WRITE recovery time	tWR	Min	max(36ns, 3nCK)												-	
WRITE-to-READ delay	tWTR	Min	max(14ns, 4nCK)												-	

NOTE 1 The rest of the Core AC timing is the same as BG mode: Table 358.

Table 363 — Byte Mode Core Timing for 8B mode: DVFSC Disabled & Write Link ECC Disabled

Item	Symbol	Min/ Max	CK Frequency (MHz)												Unit	Notes
			67	133	200	266	344	400	467	533	600	688	750	800		
Core Timing for 8B mode																
Active bank-A to active bank-B	tRRD	Min	max(10ns, 2nCK)												-	
Four-bank ACTIVATE window	tFAW	Min	40												ns	
WRITE recovery time	tWR	Min	max(36ns, 3nCK)												-	
WRITE-to-READ delay	tWTR	Min	max(14ns, 4nCK)												-	

NOTE 1 The rest of the Core AC timing is the same as BG mode: Table 358.

9.1.1.2 Timing Table for Write Link ECC is enabled

Table 364 — x16 Core Timing for BG mode: DVFSC Disabled & Write Link ECC Enabled

Item	Symbol	Min/ Max	CK Frequency (MHz)												Unit	Notes
			67	133	200	266	344	400	467	533	600	688	750	800		
Core Timing for BG mode																
WRITE recovery time	tWR	Min	max(38ns, 3nCK)												-	
WRITE-to-READ delay	tWTR_S	Min	max(10.25ns, 4nCK)												-	
	tWTR_L	Min	max(16ns, 4nCK)												-	

NOTE 1 The rest of the Core AC timing is the same as BG mode: Table 358.

Table 365 — x16 Core Timing for 16B mode: DVFSC Disabled & Write Link ECC Enabled

Item	Symbol	Min/ Max	CK Frequency (MHz)												Unit	Notes
			67	133	200	266	344	400	467	533	600	688	750	800		
Core Timing for 16B mode																
WRITE recovery time	tWR	Min	max(38ns, 3nCK)												-	
WRITE-to-READ delay	tWTR	Min	max(16ns, 4nCK)												-	

NOTE 1 The rest of the Core AC timing is the same as BG mode: Table 358.

Table 366 — x16 Core Timing for 8B mode: DVFSC Disabled & Write Link ECC Enabled

Item	Symbol	Min/ Max	CK Frequency (MHz)												Unit	Notes
			67	133	200	266	344	400	467	533	600	688	750	800		
Core Timing for 8B mode																
Active bank-A to active bank-B	tRRD	Min	max(10ns, 2nCK)												-	
Four-bank ACTIVATE window	tFAW	Min	40												ns	
WRITE recovery time	tWR	Min	max(38ns, 3nCK)												-	
WRITE-to-READ delay	tWTR	Min	max(16ns, 4nCK)												-	

9.1.1.3 Timing Table for x8 (Byte Mode) SDRAM and Write Link ECC is enabled

Table 367 — Byte Mode Core Timing for BG mode: DVFSC Disabled & Write Link ECC Enabled

Item	Symbol	Min/ Max	CK Frequency (MHz)												Unit	Notes
			67	133	200	266	344	400	467	533	600	688	750	800		
Core Timing for BG mode																
WRITE recovery time	tWR	Min	max(40ns, 3nCK)												-	
WRITE-to-READ delay	tWTR_S	Min	max(12.25ns, 4nCK)												-	
	tWTR_L	Min	max(18ns, 4nCK)												-	

NOTE 1 The rest of the Core AC timing is the same as BG mode: Table 358.

Table 368 — Byte Mode Core Timing for 16B mode: DVFSC Disabled & Write Link ECC Enabled

Item	Symbol	Min/ Max	CK Frequency (MHz)												Unit	Notes
			67	133	200	266	344	400	467	533	600	688	750	800		
Core Timing for 16B mode																
WRITE recovery time	tWR	Min	max(40ns, 3nCK)												-	
WRITE-to-READ delay	tWTR	Min	max(18ns, 4nCK)												-	

NOTE 1 The rest of the Core AC timing is the same as BG mode: Table 358.

Table 369 — Byte Mode Core Timing for 8B mode: DVFSC Disabled & Write Link ECC Enabled

Item	Symbol	Min/ Max	CK Frequency (MHz)												Unit	Notes
			67	133	200	266	344	400	467	533	600	688	750	800		
Core Timing for 8B mode																
Active bank-A to active bank-B	tRRD	Min	max(10ns, 2nCK)												-	
Four-bank ACTIVATE window	tFAW	Min	40												ns	
WRITE recovery time	tWR	Min	max(40ns, 3nCK)												-	
WRITE-to-READ delay	tWTR	Min	max(18ns, 4nCK)												-	

NOTE 1 The rest of the Core AC timing is the same as BG mode: Table 358.

9.1.2 Timing table for x16, DVFSC Enabled & Write Link ECC Disabled

Table 370 — x16 Core Timing for 16B mode: DVFSC Enabled & Write Link ECC Disabled

Item	Symbol	Min/ Max	CK Frequency (MHz)												Unit	Notes
			67	133	200	266	344	400	467	533	600	688	750	800		
Core Timing for 16B mode																
ACTIVATE-to-ACTIVATE command period (same bank)	tRC	Min	tRAS + tRPab with all-bank precharge tRAS + tRPpb with per-bank precharge												-	
RAS-to-CAS delay	tRCD	Min	max(19ns 2nCK)												-	
Row precharge time (all banks)	tRPab	Min	max(21ns 2nCK)												-	
Row precharge time (single bank)	tRPpb	Min	max(18ns, 2nCK)												-	
Row active time	tRAS	Min	max(42ns, 3nCK)												-	
		Max	min(9 * tREFI * Refresh Rate, 70.2) µs												-	
WRITE recovery time	tWR	Min	max(41ns, 3nCK)												-	
Active bank-A to active bank-B	tRRD	Min	max(5ns, 2nCK)												-	
Four-bank ACTIVATE window	tFAW	Min	20												ns	
READ Burst end to PRECHARGE command delay	tRBTP	Min	max(8.5ns, 4nCK) – 4nCK (CKR=2:1) max(8.5ns, 2nCK) – 2nCK (CKR=4:1)												-	
WRITE-to-READ delay	tWTR	Min	max(19ns, 4nCK)												-	
Precharge to Precharge Delay	tPPD	Min	2												nCK	

Table 371 — x16 Core Timing for 8B mode: DVFSC Enabled & Write Link ECC Disabled

Item	Symbol	Min/ Max	CK Frequency (MHz)												Unit	Notes
			67	133	200	266	344	400	467	533	600	688	750	800		
Core Timing for 8B mode																
Active bank-A to active bank-B	tRRD	Min	max(10ns, 2nCK)												-	
Four-bank ACTIVATE window	tFAW	Min	40												ns	

NOTE 1 The rest of the Core AC timing is the same as 16B mode: Table 370.

9.1.2.1 Timing Table for x8 (Byte Mode) SDRAM

Table 372 — Byte Mode Core Timing for 16B mode: DVFSC Enabled & Write Link ECC Disabled

Item	Symbol	Min/ Max	CK Frequency (MHz)												Unit	Notes
			67	133	200	266	344	400	467	533	600	688	750	800		
Core Timing for 16B mode																
WRITE recovery time	tWR	Min	max(43ns, 3nCK)												-	
WRITE-to-READ delay	tWTR	Min	max(21ns, 4nCK)												-	

NOTE 1 The rest of the Core AC timing is the same as 16B mode: Table 370.

Table 373 — Byte Mode Core Timing for 8B mode: DVFSC Enabled & Write Link ECC Disabled

Item	Symbol	Min/ Max	CK Frequency (MHz)												Unit	Notes
			67	133	200	266	344	400	467	533	600	688	750	800		
Core Timing for 8B mode																
Active bank-A to active bank-B	tRRD	Min	max(10ns, 2nCK)												-	
Four-bank ACTIVATE window	tFAW	Min	40												ns	
WRITE recovery time	tWR	Min	max(43ns, 3nCK)												-	
WRITE-to-READ delay	tWTR	Min	max(21ns, 4nCK)												-	

9.2 Core AC Temperature derating for AC Timing

Table 374 — Temperature Derating AC Timing

Item	Symbol	Min/ Max	CK Frequency (MHz)												Unit	Notes
			67	133	200	266	344	400	467	533	600	688	750	800		
Temperature Derating																
DQ to WCK input offset	tWCK2DQI_HF	Max	TBD												ps	
	WCK2DQI_LF	Max	TBD												ps	
WCK to DQ output offset	tWCK2DQO_HF	Max	TBD												ps	
	tWCK2DQO_LF	Max	TBD												ps	
RAS-to-CAS delay	tRCD	Min	TBD												-	
ACTIVATE-to-ACTIVATE command period (same bank)	tRC	Min	TBD												-	
RAS-to-CAS delay	tRCD	Min	TBD												-	
Row precharge time (all banks)	tRPab	Min	TBD												-	
Row precharge time (single bank)	tRPpb	Min	TBD												-	
Active bank-A to active bank-B	tRRD	Min	TBD												-	

NOTE 1 Timing derating applies for operation at TBD °C to TBD °C.

10 Absolute Maximum DC Ratings

Stresses greater than those listed may cause permanent damage to the device. This is a stress rating only, and functional operation of the device at these or any other conditions above those indicated in the operational sections of this specification is not implied. Exposure to absolute maximum rating conditions for extended periods may affect reliability.

Table 375 — Absolute Maximum DC Ratings

Parameter	Symbol	Min	Max	Unit	Note
VDD1 Supply Voltage relative to VSS	VDD1	-0.4	2.1	V	1
VDD2H Supply Voltage relative to VSS	VDD2H	-0.4	1.5	V	1
VDD2L Supply Voltage relative to VSS	VDD2L	-0.4	1.5	V	1
VDDQ Supply Voltage relative to VSS	VDDQ	-0.4	1.5	V	1
Voltage on Any Ball Except VDD1 relative to VSS	VIN, VOUT	-0.4	1.5	V	
Storage Temperature	TSTG	-55	125	°C	2

NOTE 1 See "Power-Up, Initialization" in 4.1 for relationships between power supplies.
NOTE 2 Storage Temperature is the case surface temperature on the center/top side of the LPDDR5 device. For the measurement conditions, please refer to JESD51-2A.

11 AC and DC Operating Condition

11.1 Recommended DC Operating Conditions

Table 376 - Recommended Voltage operating conditions

			Low Freq Voltage Spec Freq:DC to 2 MHz				Z(f) Spec Freq: 2 MHz to 10 MHz		Z(f) Spec Freq: 20 MHz		
DRAM	**Symbol**		**Min**	**Typ**	**Max**	**Unit**	Zmax	Unit	Zmax	Unit	Notes
Core 1 Power	VDD1		1.7	1.8	1.95	V	tbd	mOhm	tbd	mOhm	1,2,9
Core 2 Power/Input Buffer Power	VDD2H		1.01	1.05	1.12	V	40	mOhm	80	mOhm	1,2,9
	VDD2L		0.87	0.9	0.97	V	120	mOhm	190	mOhm	1,2,9
I/O Buffer Power	VDDQ	SPEC Range-1	0.47	0.5	0.57	V	tbd	mOhm	tbd	mOhm	2,3,6,9
		Spec Range-2	0.27	0.3	0.37	V					2,4,9
		Allowable Range	0.27	N/A	0.57	V	N/A		N/A		5,6,7,8

NOTE 1 VDD1 uses significantly less current than VDD2H and VDD2L.
NOTE 2 DC to 2 MHz voltage range includes all noise at DRAM ball, both DC and AC ripple fluctuations. This noise is included in the aperture mask defined by VdIVW.
Refer to Figure 1 DC voltage range.
NOTE 3 SPEC Range 1 is intended for IO operation with both ODT enabled and disabled.
NOTE 4 SPEC Range 2 is intended for IO operation with ODT disabled.
NOTE 5 IO operation at VDDQ levels between outside SPEC Range 1 or SPEC Range 2 is allowed with ODT disabled.
NOTE 6 Allowable range is valid only when DVFSQ enabled.
NOTE 7 100mV tolerance (-30mV/+70mV) is applied to VDDQ allowable ranges. Refer to Figure 2 VDDQ tolerance definition in allowable range.
NOTE 8 Vendors may support 0.6V. VDDQ (typ) as an option. Because ZQ calibration is optimized at VDDQ=0.5V, the output drive strength. May not be guaranteed at VDDQ=0.6V. Refer to a vendor's data sheet.
NOTE 9 Z(f) is defined for all pins per voltage domain per channel. Z(f) does not include the DRAM package and silicon die.

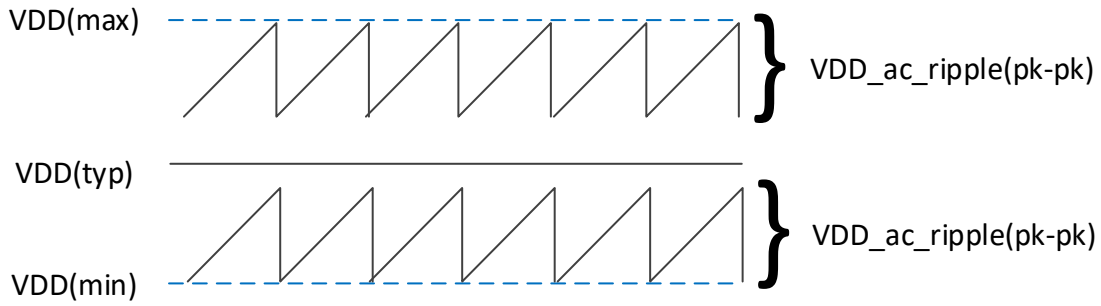

Figure 222 - DC Voltage Range

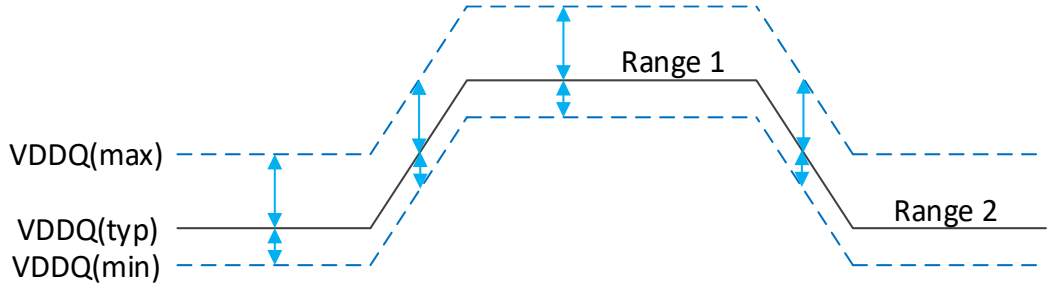

Figure 223 - VDDQ Tolerance Definition in Allowable Range

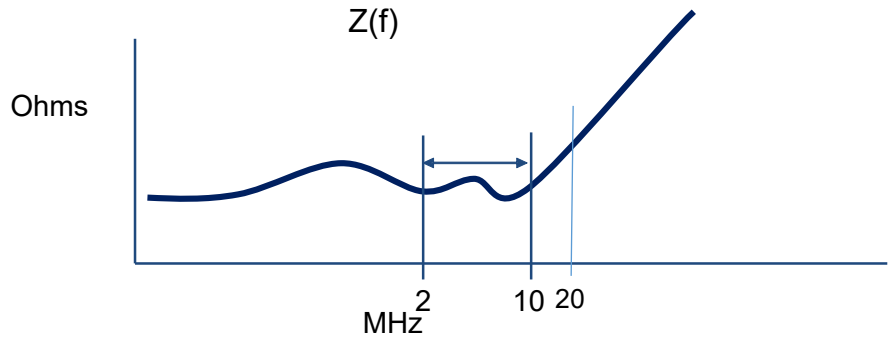

Figure 224 - Zprofile Z(f) of the system at the DRAM package solder ball (without the DRAM component)

A simplified electrical system load model for Z(f) with the general frequency response is shown in the figure below. The system resistance and inductance can be scaled to generalize the spec response to the DRAM pins.

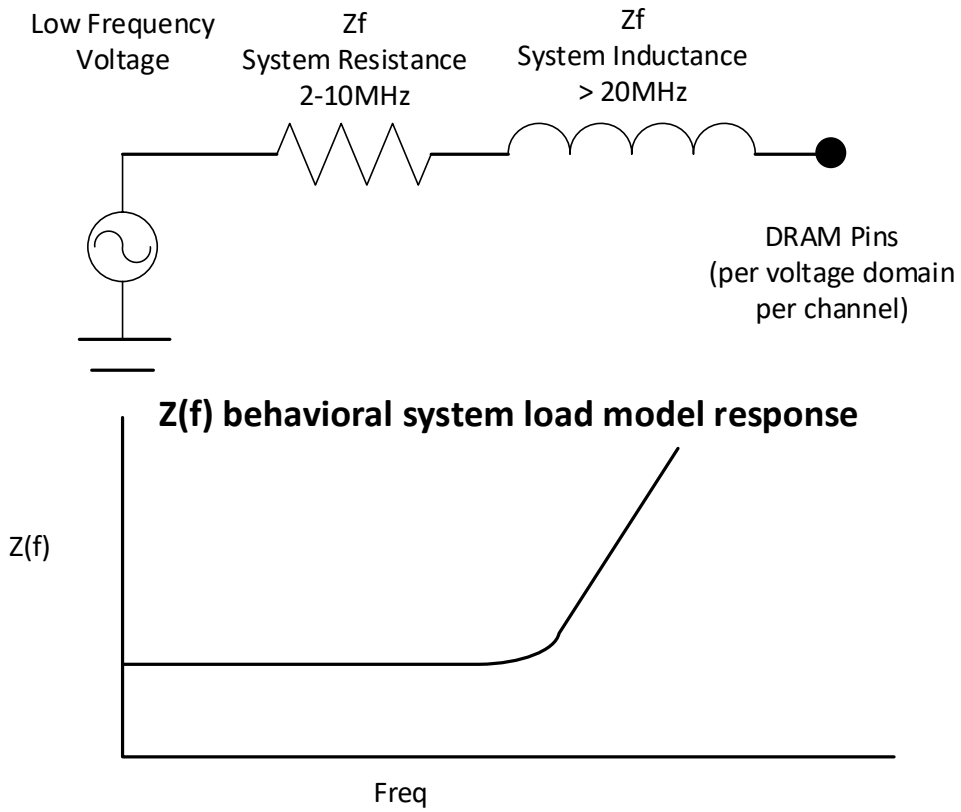

Figure 225 - A simplified Z(f) system electrical model and frequency response of the behavioral PDN electrical load model without the DRAM component per voltage domain per channel.

11.2 Input Leakage Current

Table 377 - Input Leakage Current

Parameter/Condition	Symbol	Min	Max	Unit	Notes
Input Leakage Current	I_L	-8	8	uA	1,2,3
CS Leakage Current	I_{LCS}	-16	16	uA	1,2,4,5

NOTE 1 For CK_t, CK_c, WCK_t, WCK_c, and CA. Any input 0V ≤ VIN ≤ VDDQ (All other pins not under test = 0V).
NOTE 2 For CS and RESET_n. Any input 0V ≤ VIN ≤ VDD2H (All other pins not under test = 0V).
NOTE 3 CA ODT is disabled for CA, CK ODT is disabled for CK_t and CK_c, and WCK ODT is disabled for WCK_t and WCK_c.
NOTE 4 CS ODT is disabled for CS if optional CS ODT is supported.
NOTE 5 ILCS is applied when CS ODT is supported. If CS ODT is not supported, the input leakage current for CS shall meet IL.

11.3 Input/Output Leakage Current

Table 378 — Input/Output Leakage Current

Parameter/Condition	Symbol	Min	Max	Unit	Notes
Input/Output Leakage Current	IOZ	-10	10	uA	1,2

NOTE 1 For DQ, RDQS_t, RDQS_c and DMI. Any I/O 0V ≤ VOUT ≤ VDDQ.
NOTE 2 I/Os status are disabled: High Impedance and ODT Off.

11.4 Operating Temperature Range

Table 379 — Operating Temperature Range

Parameter / Condition	Symbol	Min	Max	Unit	Notes
Standard	$T_{oper_standard}$	-25	85	℃	1,2,3
Elevated	$T_{oper_elevated}$	-25	105	℃	1,2,3

NOTE 1 Operating Temperature is the case surface temperature on the center-top side of the LPDDR5 device. For the measurement conditions, please refer to JESD51-2A.

NOTE 2 Some applications require operation of LPDDR5 in the maximum temperature conditions in the Elevated Temperature Range between 85°C and 105°C case temperature. For LPDDR5 devices, derating may be necessary to operate in this range.

NOTE 3 Either the device case temperature rating or the temperature sensor may be used to set an appropriate refresh rate, determine the need for AC timing de-rating and/or monitor the operating temperature. When using the temperature sensor, the actual device case temperature may be higher than the TOPER rating that applies for the Standard or Elevated Temperature Ranges. For example, TCASE may be above 85°C when the temperature sensor indicates a temperature of less than 85°C.

11.4.1 Operating Temperature Range (Automotive spec addendum only)

Table 380 — Operating Temperature Range

Parameter / Condition	Symbol	Min	Max	Unit	Notes
Standard	$T_{oper_standard}$	-25	85	℃	1
Automotive Grade1	$T_{oper_auto_grade1}$	-40	125	℃	1,2,3,4
Automotive Grade 2	$T_{oper_auto_grade2}$	-40	105	℃	1,2,3,4
Automotive Grade 3	$T_{oper_auto_grade3}$	-40	85	℃	1,2,3,4

NOTE 1 Operating Temperature is the case surface temperature on the center-top side of the LPDDR5 device. For the measurement conditions, please refer to JESD51-2A.

NOTE 2 Automotive: Some applications require operation of LPDDR5 in the maximum temperature conditions over 85°C. For LPDDR5 devices, de-rating may be necessary to operate in this range (over 85°C).

NOTE 3 Either the device case temperature rating or the temperature sensor may be used to set an appropriate refresh rate, determine the need for AC timing de-rating, and/or monitor the operating temperature. When using the temperature sensor, the actual device case temperature may be higher than the TOPER rating that applies for the Standard or automotive grades Temperature Ranges. For example, TCASE may be above 85°C when the temperature sensor indicates a temperature of less than 85°C.

NOTE 4 Automotive temperature condition is only allowed at the limited part which specifies the guarantee in the datasheet.

11.5 Electrostatic Discharge Sensitivity Characteristics

Table 381 — Electrostatic Discharge Sensitivity Characteristics

Parameter	Symbol	Min	Max	Unit	Notes
Human body model (HBM)	ESD_{HBM}	1000		V	1
Charged-device model (CDM)	ESD_{CDM}	250		V	2

NOTE 1 Refer to ESDA/JEDEC Joint Standard JS-001-2017 for measurement procedures.

NOTE 2 Refer JESD22-A115C for measurement procedures.

12 AC and DC Input/Output Measurement levels

12.1 1.05V High speed LVCMOS

12.1.1 Standard specifications

All voltages are referenced to ground except where noted.

12.1.2 Input Level for Reset_n

LPDDR5 uses CMOS with VDD2H Reset_n signaling to ensure stable LPDDR5 reset operation.

Table 382 — Reset input level specification

Item	Symbol	Min/Max		Unit	Note
Reset_n ViH	ViH_RS	Min	0.8xVDD2H	V	
		Max	VDD2H+0.2	V	1
Reset_n ViL	ViL_RS	Min	-0.2	V	1
		Max	0.2xVDD2H	V	

NOTE 1 Refer LPDDR5 overshoot and undershoot, 12.1.4.

12.1.3 Input Level for CS

The definition applies to CS.

Table 383 — LPDDR5 Input Level for CS

Parameter	Symbol	Min	Max	Unit	Note
Input High Level	V_{IH}	TBD	TBD	V	1
Input Low Level	V_{IL}	TBD	TBD	V	1

NOTE 1 Refer LPDDR5 AC Over / Undershoot section, 12.1.4.

12.1.4 AC Overshoot / Undershoot

12.1.4.1 AC Overshoot / Undershoot

Table 384 — AC Overshoot / Undershoot

Parameter	Specification
Maximum Peak Amplitude allowed for overshoot area	0.35V
Maximum Peak Amplitude allowed for undershoot area	0.35V
Maximum overshoot area above VDD2H/VDDQ	0.8V-ns
Maximum undershoot area above VSS	0.8V-ns

12.1.4.2 AC Overshoot / Undershoot for LVSTL

Table 385 — LPDDR5 AC Overshoot / Undershoot for LVSTL

Parameter	Min/ Max	Data Rate				Units
		1600	3200	5500	6400	
Maximum Peak Amplitude allowed for overshoot area	Max	0.3	0.3	0.3	0.3	V
Maximum Peak Amplitude allowed for undershoot area	Max	0.3	0.3	0.3	0.3	V
Maximum overshoot area above VDD2H/VDDQ	Max	0.1	0.1	0.1	0.1	V-ns
Maximum undershoot area above VSS	Max	0.1	0.1	0.1	0.1	V-ns

12.1.4.2 AC Overshoot / Undershoot for LVSTL (Cont'd)

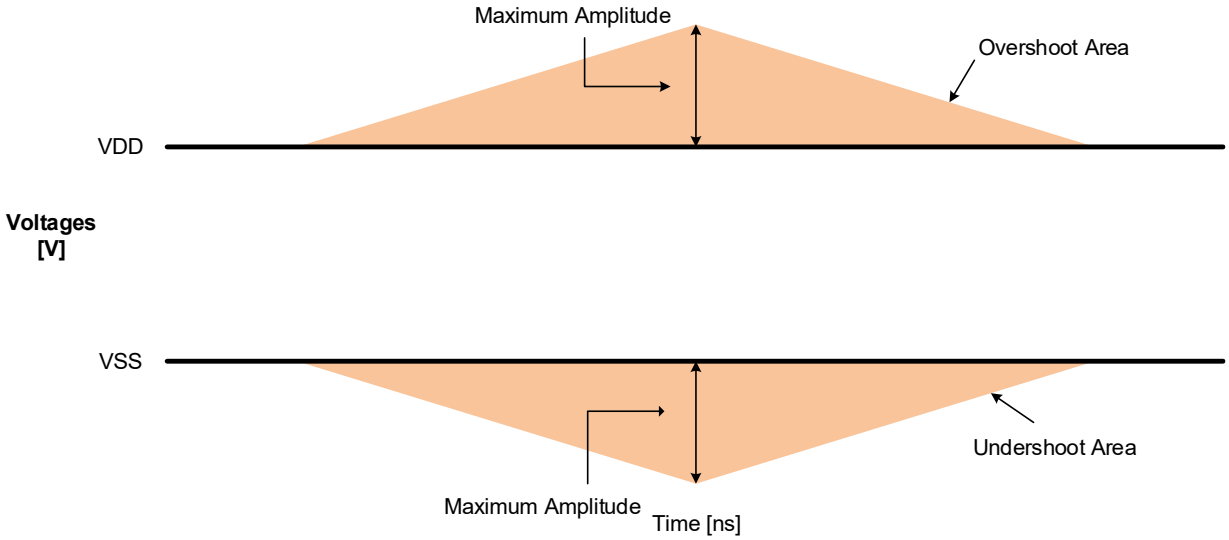

NOTE 1 VDD is VDD2H for CA[6:0] and CK_t/c, CS and RESET_n. VDD is VDDQ for DQ, DMI, RDQS_t, WCK_t/c
NOTE 2 Maximum peak amplitude values are referenced from actual VDD and VSS values.
NOTE 3 Maximum area values are referenced from maximum operating VDD and VSS values.

Figure 226 — Overshoot and Undershoot Definition

12.2 Differential Input Voltage

12.2.1 Differential Input Voltage for CK

The minimum input voltage need to satisfy both Vindiff_CK and Vindiff_CK /2 specification at input receiver and their measurement period is 1tCK. Vindiff_CK is the peak to peak voltage centered on 0 volts differential and Vindiff_CK /2 is max and min peak voltage from 0V.

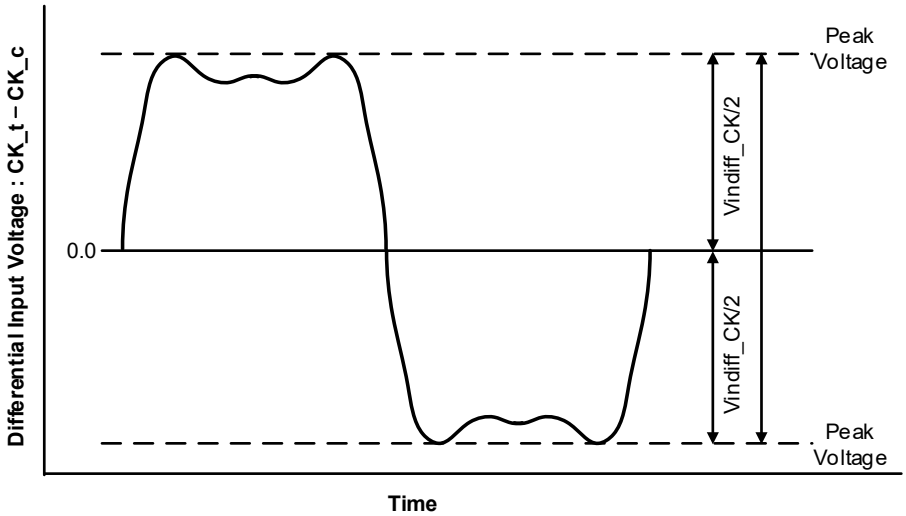

Figure 227 — CK Differential Input Voltage

12.2.1 Differential Input Voltage for CK (Cont'd)

Table 386 — CK Differential Input Voltage

Parameter	Symbol	Clock Rate						Unit	Note
		266MHz		533MHz		800MHz			
		Min	Max	Min	Max	Min	Max		
CK Differential Input Voltage	Vindiff_CK	350	-	350	-	350	-	mV	1,2

NOTE 1 Refer to Table 195 to match the clock rate to data rate.
NOTE 2 The peak voltage of Differential CK signals is calculated in a following equation.
Vindiff_CK = (Max Peak Voltage) - (Min Peak Voltage)
Max Peak Voltage = Max(f(t))
Min Peak Voltage = Min(f(t))
f(t) = VCK_t - VCK_c

12.2.1.1 Peak Voltage Calculation Method

The peak voltage of Differential Clock signals are calculated in a following equation.

VIH.DIFF.Peak Voltage = Max(f(t))
VIL.DIFF.Peak Voltage = Min(f(t))
f(t) = VCK_t - VCK_c

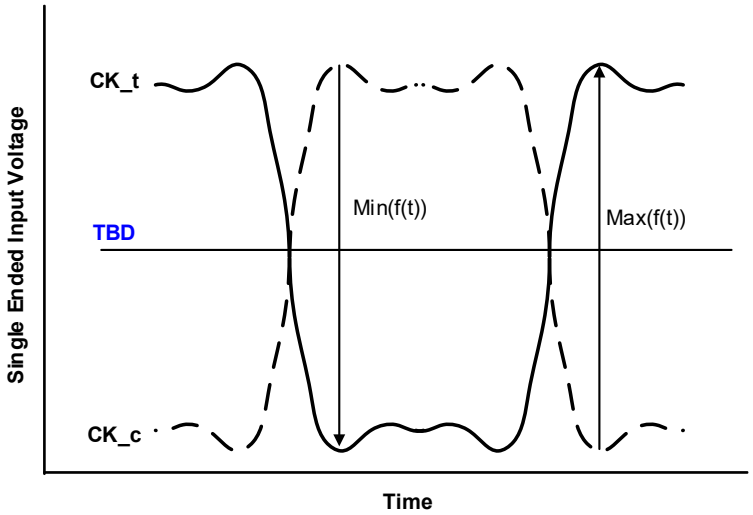

NOTE 1 TBD is LPDDR5 SDRAM internal setting value by Vref training.

Figure 228 — Definition of differential Clock Peak Voltage

12.2.1.2 Single ended Input Voltage for CK

The minimum input voltage need to satisfy both Vinse_CK, Vinse_CK_High/Low specification at input receiver.

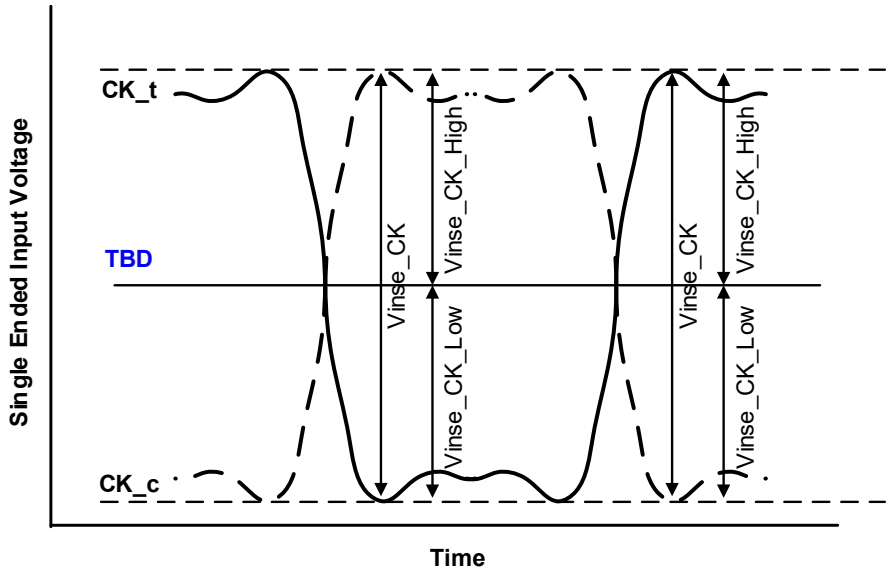

NOTE 1 TBD is LPDDR5 SDRAM internal setting value by Vref training

Figure 229 — Clock Single ended Input Voltage

Table 387 — Clock Single-Ended Input Voltage

Parameter	Symbol	Clock Rate						Unit	Note
		266MHz		533MHz		800MHz			
		Min	Max	Min	Max	Min	Max		
Clock Single-ended input Voltage	Vinse_CK	175	-	175	-	175	-	mV	
Clock Single-ended input Voltage High from TBD	Vinse_CK_High	87.5	-	87.5	-	87.5	-	mV	
Clock Single-ended input Voltage Low from TBD	Vinse_CK_Low	87.5	-	87.5	-	87.5	-	mV	

12.2.1.3 Differential Input Slew Rate Definition for CK

Input slew rate for differential signals (CK_t, CK_c) are defined and measured as shown in Figure 230 and the following Tables.

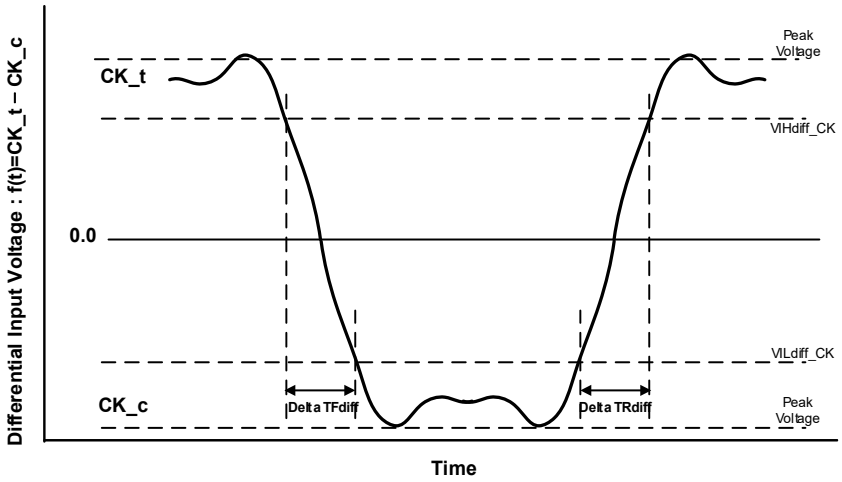

NOTE 1 Differential signal rising edge from VILdiff_CK to VIHdiff_CK must be monotonic slope.
NOTE 2 Differential signal falling edge from VIHdiff_CK to VILdiff_CK must be monotonic slope.

Figure 230 — Differential Input Slew Rate Definition for CK_t, CK_c

Table 388 — Differential Input Slew Rate Definition for CK_t, CK_c

Description	From	To	Defined by
Differential input slew rate for rising edge (CK_t - CK_c)	VILdiff_CK	VIHdiff_CK	|VILdiff_CK - VIHdiff_CK|/DeltaTRdiff
Differential input slew rate for falling edge (CK_t - CK_c)	VIHdiff_CK	VILdiff_CK	|VILdiff_CK - VIHdiff_CK|/DeltaTFdiff

Table 389 — Differential Input Level for CK_t, CK_c

Parameter	Symbol	Clock Rate						Unit	Note
		266MHz		533MHz		800MHz			
		Min	Max	Min	Max	Min	Max		
Differential Input High	VIHdiff_CK	145	-	145	-	145	-	mV	
Differential Input Low	VILdiff_CK	-	-145	-	-145	-	-145	mV	

Table 390 — Differential Input Slew Rate for CK_t, CK_c

Parameter	Symbol	Clock Rate						Unit	Note
		266MHz		533MHz		800MHz			
		Min	Max	Min	Max	Min	Max		
Differential Input Slew Rate for Clock	SRIdiff_CK	2	14	2	14	2	14	V/ns	

12.2.1.4 Differential Input Cross Point Voltage for CK

The cross point voltage of differential input signals (CK_t, CK_c) must meet the requirements in Table 391. The differential input cross point voltage VIX is measured from the actual cross point of true and complement signals to the mid-level that is TBD.

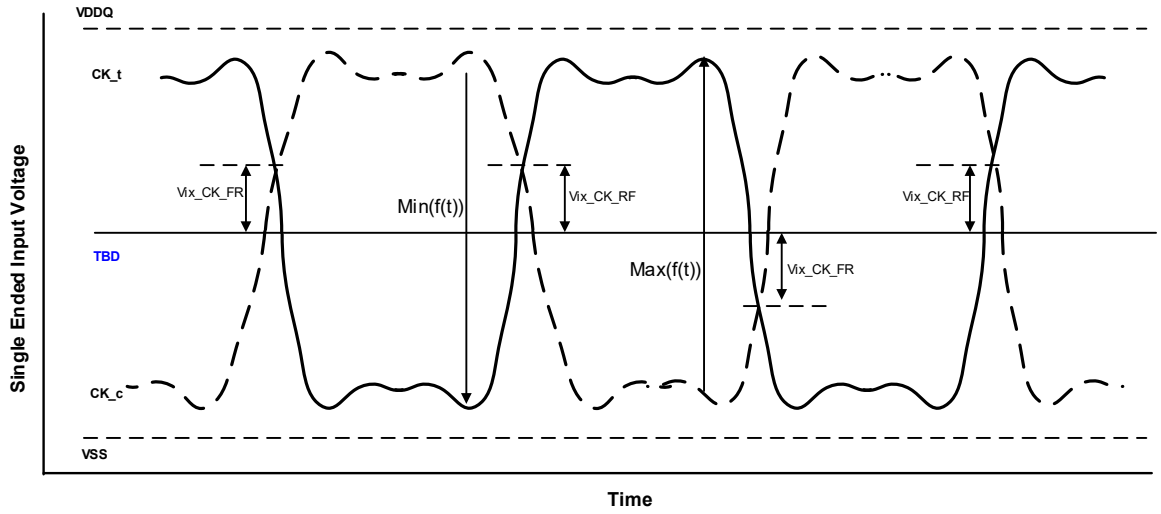

NOTE 1 The base level of Vix_CK_FR/RF is TBD that is LPDDR5 SDRAM internal setting value by Vref training.

Figure 231 — Differential Input Slew Rate Definition for CK_t, CK_c

Table 391 — Cross point voltage for differential input signals (Clock)

Parameter	Symbol	Clock Rate						Unit	Note
		266MHz		533MHz		800MHz			
		Min	Max	Min	Max	Min	Max		
Clock Differential input crosspoint voltage ratio	Vix_CK_ratio	-	25	-	25	-	25	%	1,2

NOTE 1 Vix_CK_Ratio is defined by this equation: Vix_CK_Ratio = Vix_CK_FR/|Min(f(t))|
NOTE 2 Vix_CK_Ratio is defined by this equation: Vix_CK_Ratio = Vix_CK_RF/Max(f(t))

12.2.2 Differential Input Voltage for WCK

The minimum input voltage need to satisfy both Vindiff_WCK and Vindiff_WCK /2 specification at input receiver and their measurement period is 1tWCK. Vindiff_WCK is the peak to peak voltage centered on 0 volts differential and Vindiff_WCK /2 is max and min peak voltage from 0V.

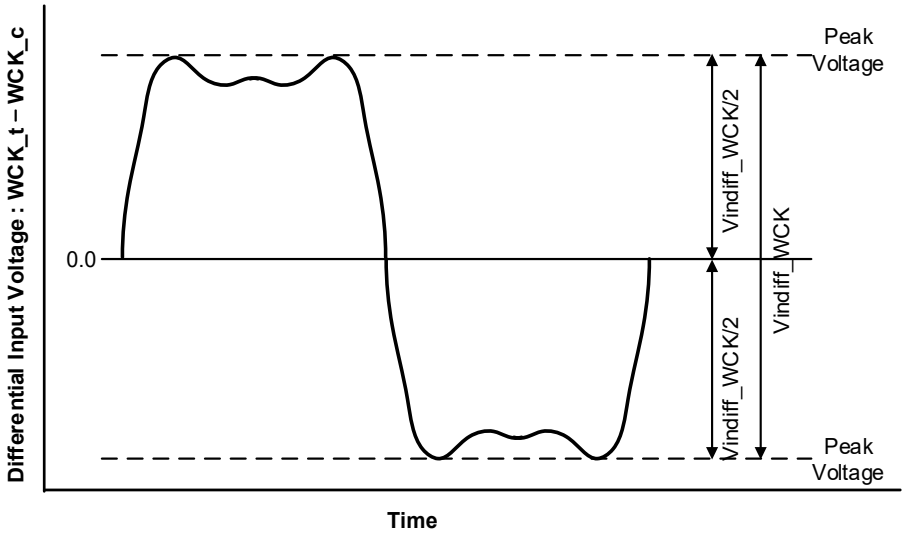

Figure 232 — WCK Differential Input Voltage

Table 392 — WCK differential input voltage

Parameter	Symbol	WCK Rate [MHz]												Unit	Note
		800		1066		1600		2133		2750		3200			
		Min	Max	Min	Max	Min	Max	Min	Max	Min	Max	Min	Max		
WCK Differential Input Voltage	Vindiff_WCK	300	-	300	-	300	-	280	-	TBD	-	TBD	-	mV	1,2

NOTE 1 Refer to Table 195 to match the WCK rate to data rate.

NOTE 2 The peak voltage of Differential WCK signals is calculated in a following equation.
Vindiff_WCK = (Max Peak Voltage) - (Min Peak Voltage)
Max Peak Voltage = Max(f(t))
Min Peak Voltage = Min(f(t))
f(t) = VWCK_t - VWCK_c

12.2.2.1 Peak Voltage Calculation Method

The peak voltage of Differential WCK signals are calculated in a following equation.

VIH.DIFF.Peak Voltage = Max(f(t))
VIL.DIFF.Peak Voltage = Min(f(t))
f(t) = VWCK_t - VWCK_c

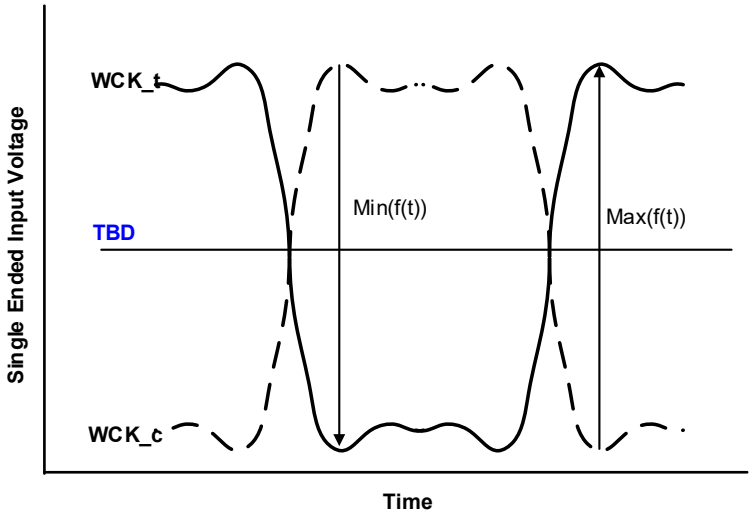

NOTE 1 TBD is LPDDR5 SDRAM internal setting value by Vref training.

Figure 233 — Definition of differential WCK Peak Voltage

12.2.2.2 Single ended Input Voltage for WCK

The minimum input voltage need to satisfy both Vinse_WCK, Vinse_WCK_High/Low specification at input receiver.

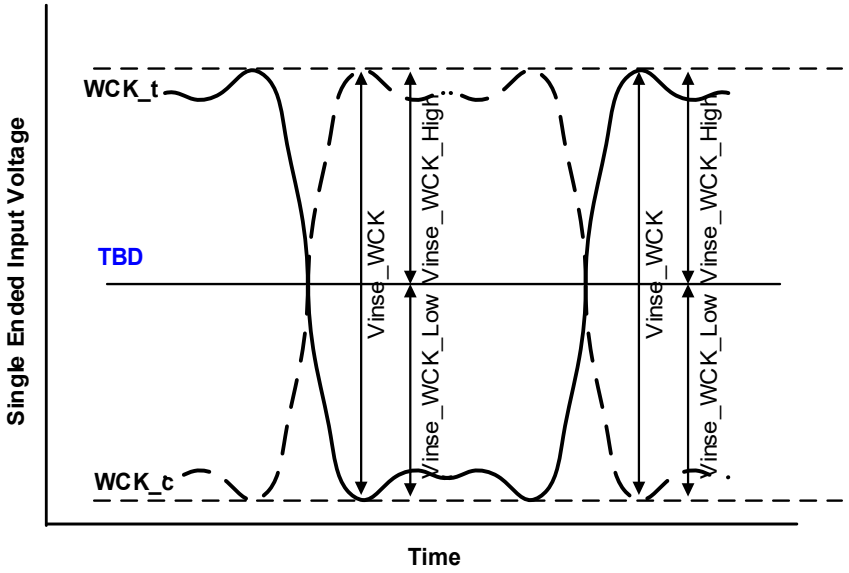

NOTE 1 TBD is LPDDR5 SDRAM internal setting value by Vref training

Figure 234 — WCK Single ended Input Voltage

Table 393 — WCK Single-Ended Input Voltage

Parameter	Symbol	WCK Rate [MHz]												Unit	Note
		800		1066		1600		2133		2750		3200			
		Min	Max	Min	Max	Min	Max	Min	Max	Min	Max	Min	Max		
WCK Single-ended input Voltage	Vinse_WCK	150	-	150	-	150	-	140	-	TBD	-	TBD	-	mV	
WCK Single-ended input Voltage High from TBD	Vinse_WCK _High	75	-	75	-	75	-	70	-	TBD	-	TBD	-	mV	
WCK Single-ended input Voltage Low from TBD	Vinse_WCK _Low	75	-	75	-	75	-	70	-	TBD	-	TBD	-	mV	

12.2.2.3 Differential Input Slew Rate Definition for WCK

Input slew rate for differential signals (WCK_t, WCK_c) are defined and measured as shown in Figure **235** and the following Tables.

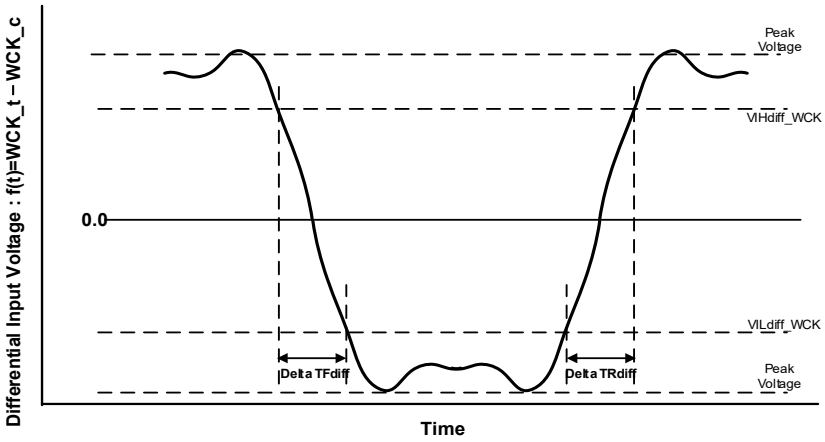

NOTE 1 Differential signal rising edge from VILdiff_WCK to VIHdiff_WCK must be monotonic slope.
NOTE 2 Differential signal falling edge from VIHdiff_WCK to VILdiff_WCK must be monotonic slope.

Figure 235 — Differential Input Slew Rate Definition for WCK_t, WCK_c

Table 394 — Differential Input Slew Rate Definition for WCK_t, WCK_c

Description	From	To	Defined by
Differential input slew rate for rising edge (WCK_t - WCK_c)	VILdiff_WCK	VIHdiff_WCK	|VILdiff_WCK - VIHdiff_WCK|/DeltaTRdiff
Differential input slew rate for falling edge (WCK_t - WCK_c)	VIHdiff_WCK	VILdiff_WCK	|VILdiff_WCK - VIHdiff_WCK|/DeltaTFdiff

Table 395 — Differential Input Level for WCK_t, WCK_c

Parameter	Symbol	WCK Rate [MHz]												Unit	Note
		800		1066		1600		2133		2750		3200			
		Min	Max	Min	Max	Min	Max	Min	Max	Min	Max	Min	Max		
Differential Input High	VIHdiff_WCK	120	-	120	-	120	-	100	-	TBD	-	TBD	-	mV	
Differential Input Low	VILdiff_WCK	-	120	-	120	-	120	-	100	-	TBD	-	TBD	mV	

Table 396 — Differential Input Slew Rate for WCK_t, WCK_c

Parameter	Symbol	WCK Rate [MHz]												Unit	Note
		800		1066		1600		2133		2750		3200			
		Min	Max	Min	Max	Min	Max	Min	Max	Min	Max	Min	Max		
Differential Input Slew Rate for WCK	SRIdiff_WCK	2	14	2	14	2	14	2	14	2	14	2	14	V/ns	

12.2.2.4 Differential Input Cross Point Voltage for WCK

The cross point voltage of differential input signals (WCK_t, WCK_c) must meet the requirements in Table 395. The differential input cross point voltage VIX is measured from the actual cross point of true and complement signals to the mid-level that is TBD.

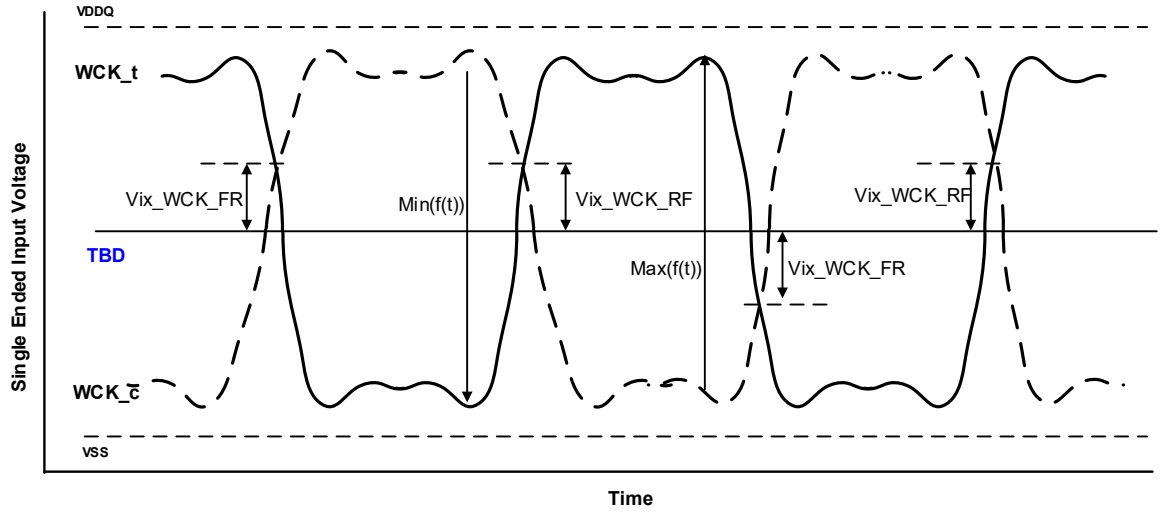

NOTE 1 The base level of Vix_WCK_FR/RF is TBD that is LPDDR5 SDRAM internal setting value by Vref training.

Figure 236 — Vix Definition (WCK)

Table 397 — Cross point voltage for differential input signals (WCK)

Parameter	Symbol	WCK Rate [MHz]												Unit	Note
		800		1066		1600		2133		2750		3200			
		Min	Max	Min	Max	Min	Max	Min	Max	Min	Max	Min	Max		
WCK Differential input crosspoint voltage ratio	Vix_WCK_ratio	-	20	-	20	-	20	-	20	-	20	-	20	%	1,2

NOTE 1 Vix_WCK_Ratio is defined by this equation: Vix_WCK_Ratio = Vix_WCK_FR/|Min(f(t))|

NOTE 2 Vix_WCK_Ratio is defined by this equation: Vix_WCK_Ratio = Vix_WCK_RF/Max(f(t))

12.3Output Slew Rate

12.3.1 Single Ended Output Slew Rate

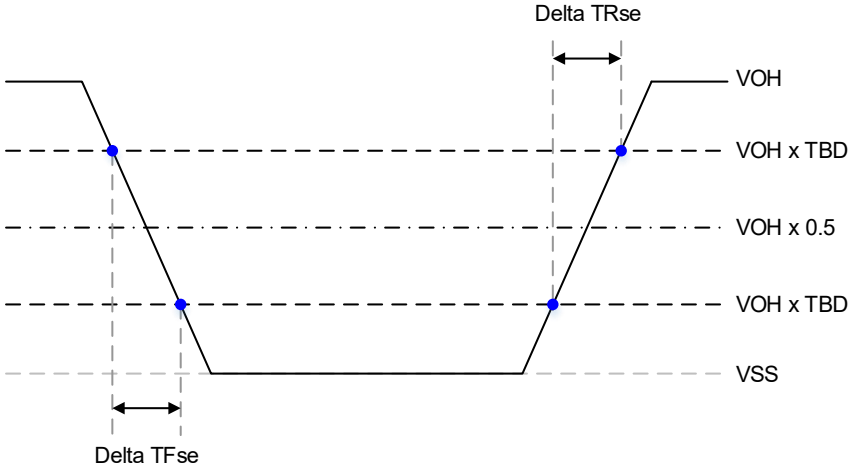

Figure 237 - Single Ended Output Slew Rate Definition

Table 398 - Output Slew Rate (single-ended)

Parameter	Symbol	Value		Units
		Min	Max	
Single-ended Output Slew Rate	SRQse	TBD	TBD	V/ns
Output slew-rate matching Ratio (Rise to Fall)	-	TBD	TBD	-

Description:
SR: Slew Rate
Q: Query Output (like in DQ, which stands for Data-in, Query-Output)
se: Single-ended Signals

NOTE 1 These values are measured with the following output reference load or guaranteed by design.

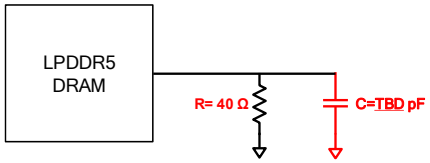

NOTE 2 The ratio of pull-up to pull-down slew rate is specified for the same temperature and voltage, over the entire temperature and voltage range. For a given output, it represents the maximum difference between pull-up and pulldown drivers due to process variation.

NOTE 3 The output slew rate for falling and rising edges is defined and measured between VOH x TBD and VOH x TBD.

NOTE 4 Slew rates are measured using a unit step signal which makes a full swing signal under average SSO conditions, with 50% of DQ signals per data byte switching. Because a high capacitance load reduces Voh(ac) at high frequency close to Fmax, the signal using PRBS data pattern may not achieve a full swing at such conditions.

NOTE 5 The parameters about Single-ended applies to RDQS_t and RDQS_c when either RDQS_t or RDQS_c is disabled.

12.3.2 Differential Output Slew Rate

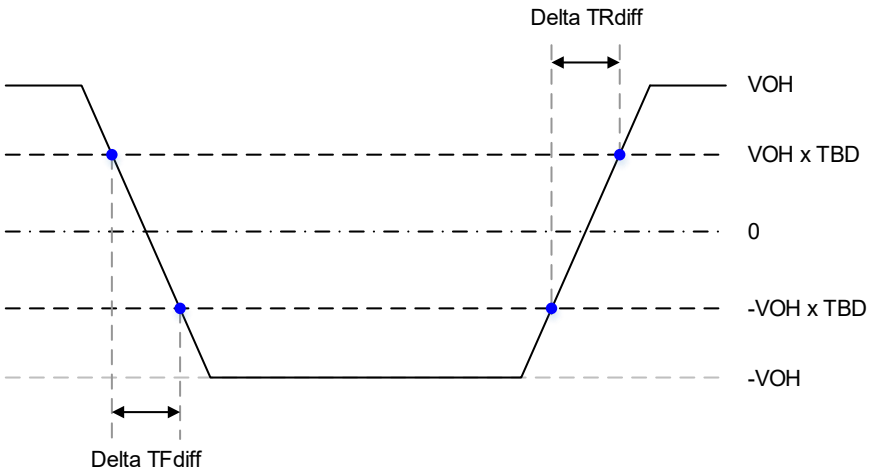

Figure 238 - Differential Output Slew Rate Definition

Table 399 - Differential Output Slew Rat

Parameter	Symbol	Value		Units
		Min	Max	
Differential Output Slew Rate	SRQdiff	TBD	TBD	V/ns

Description:
SR: Slew Rate
Q: Query Output (like in DQ, which stands for Data-in, Query-Output)
diff: Differential Signals

NOTE 1 These values are measured with the following output reference load or guaranteed by design.

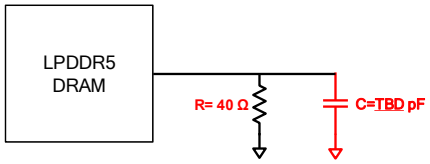

NOTE 2 The output slew rate for falling and rising edges is defined and measured between -VOH x TBD and VOH x TBD.

NOTE 3 Slew rates are measured using a unit step signal which makes a full swing signal under average SSO conditions, with 50% of DQ signals per data byte switching. Because a high capacitance load reduces Voh(ac) at high frequency close to Fmax, the signal using PRBS data pattern may not achieve a full swing at such conditions.

12.4Driver Output Timing Reference load

These "Timing Reference Loads" are not intended as a precise representation of any particular system environment or a depiction of the actual load presented by a production tester. System designers should use IBIS or other simulation tools to correlate the timing reference load to a system environment. Manufacturers correlate to their production test conditions, generally one or more coaxial transmission lines terminated at the tester electronics.

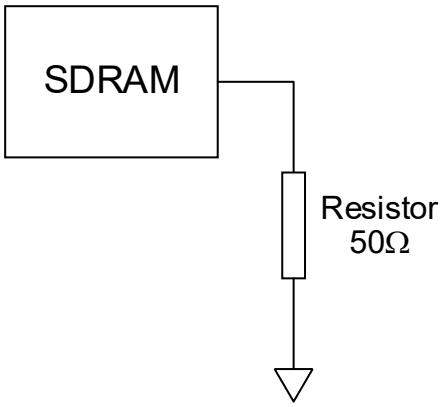

Figure 239 - Driver Output Reference Load for Timing

12.5 Single Ended WCK

12.5.1 Single Ended WCK input definitions

The minimum input voltage need to satisfy both Vinse_WCK_SE_High and Vinse_WCK_SE_Low specification at input receiver and their measurement period is 1tWCK. Vinse_WCK_SE is the peak to peak voltage centered on VDDQ/2 and Vinse_WCK_SE_High and Vinse_WCK_SE_Low is max and min peak voltage from VDDQ/2.

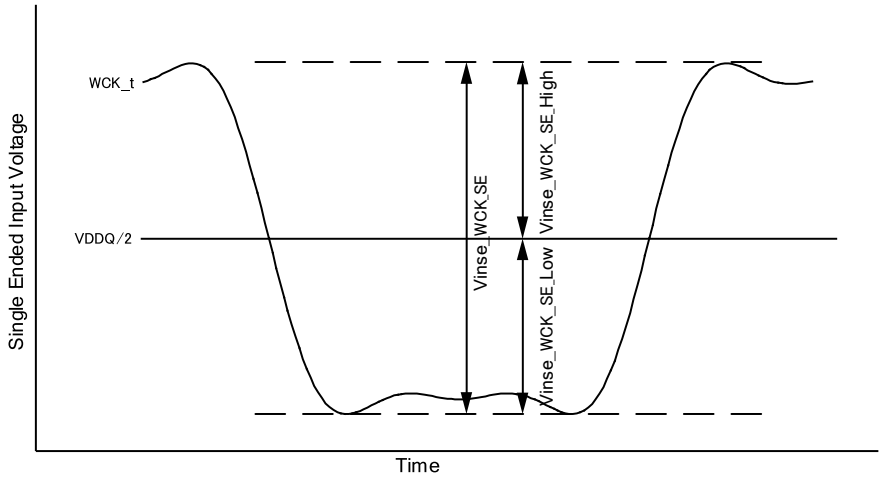

Figure 240 — Single Ended Mode WCK input Voltage

12.5.2 Single Ended Mode WCK Pulse Definitions

Single Ended Mode WCK pulse definitions are defined shown below.

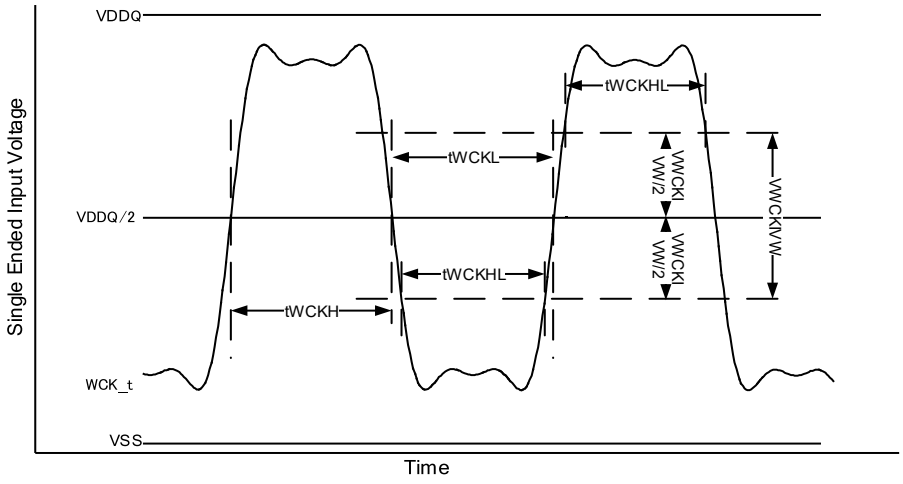

Figure 241 — Single Ended Mode WCK pulse

12.5.2 Single-Ended Mode WCK Pulse Definitions (Cont'd)

Table 400 — Single Ended WCK parameters

Parameter	Symbol	Min/Max	WCK Frequency	Unit	Note
			800MHz		
WCK Single ended input voltage	Vinse_WCK_SE	Min	220	mV	
WCK Single Ended Input Voltage High	Vinse_WCK_SE_High	Min	110	mV	
WCK Single Ended Input Voltage Low	Vinse_WCK_SE_low	Min	110	mV	
WCK single ended timing window	VWCKIVW	Min	180	mV	
Clock Single Ended WCK Pulse	tWCKHL	Min	0.23	tWCK (avg)	
WCK single ended Slew Rate	SRIWCKSE	Min	1	V/ns	1
		Max	7		

NOTE 1 Single ended slew rate is measured at VDDQ/2 - VWCKIVW/2 and VDDQ/2 + VWCKIVW/2

12.6 Single Ended CK

12.6.1 Single Ended CK input definitions

The minimum input voltage need to satisfy both Vinse_CK_SE_High and Vinse_CK_SE_Low specification at input receiver and their measurement period is 1tCK. Vinse_CK_SE is the peak to peak voltage centered on VDDQ/2 and Vinse_CK_SE_High and Vinse_CK_SE_Low is max and min peak voltage from VDDQ/2.

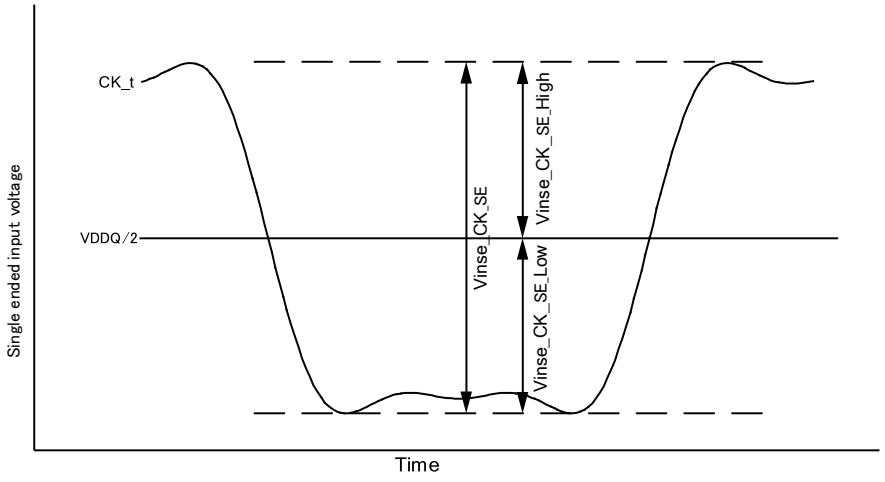

Figure 242 — Single Ended Mode CK input Voltage

12.6.2 Single Ended Mode CK Pulse Definitions

Single Ended Mode CK pulse definitions are defined as shown in Table 401.

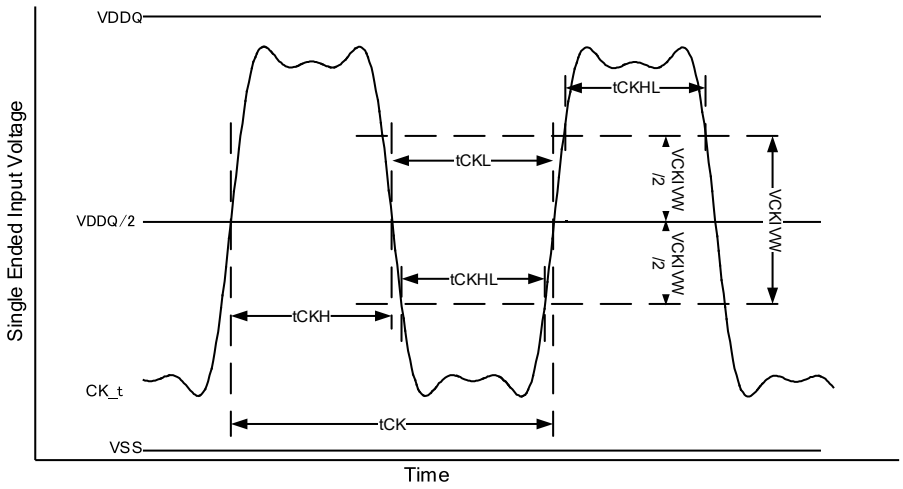

Figure 243 — Single Ended Mode CK pulse

Table 401 — Single Ended CK parameters

Parameter	Symbol	Min/Max	CK Frequency	Unit	Note
			400MHz		
CK Single ended input voltage	Vinse_CK_SE	Min	220	mV	
CK Single Ended Input Voltage High	Vinse_CK_SE_High	Min	110	mV	
CK Single Ended Input Voltage Low	Vinse_CK_SE_low	Min	110	mV	
CK single ended timing window	VCKIVW	min	190	mV	
Clock Single Ended CK Pulse	tCKHL	Min	0.26	tCK(avg)	
CK single ended Slew Rate	SRICKSE	Min	1	V/ns	1
		Max	7		

NOTE 1 Single ended slew rate is measured at VDDQ/2 - VCKIVW/2 and VDDQ/2 + VCKIVW/2.

12.7 Read Timing tLZ(DQS), tLZ(DQ), tHZ(DQS), tHZ(DQ) Calculation

12.7.1 tLZ(RDQS) tLZ(DQ) tHZ(RDQS) tHZ(DQ)

tHZ and tLZ transitions occur in the same time window as valid data transitions. These parameters are referenced to voltage levels that indicate when the device output is no longer driving tHZ(RDQS) and tHZ(DQ), or begins driving tLZ(RDQS), tLZ(DQ).

This section includes a method to calculate the point when the device is no longer driving tHZ(RDQS) and tHZ(DQ), or begins driving tLZ(RDQS), tLZ(DQ), by measuring the signal at two different voltages. The actual voltage measurement points are not critical as long as the calculation is consistent. The parameters tLZ(RDQS), tLZ(DQ), tHZ(RDQS), and tHZ(DQ) are defined as single ended.

12.7.1.1 tLZ(RDQS) and tHZ(RDQS) Calculation for ATE(Automatic Test Equipment)

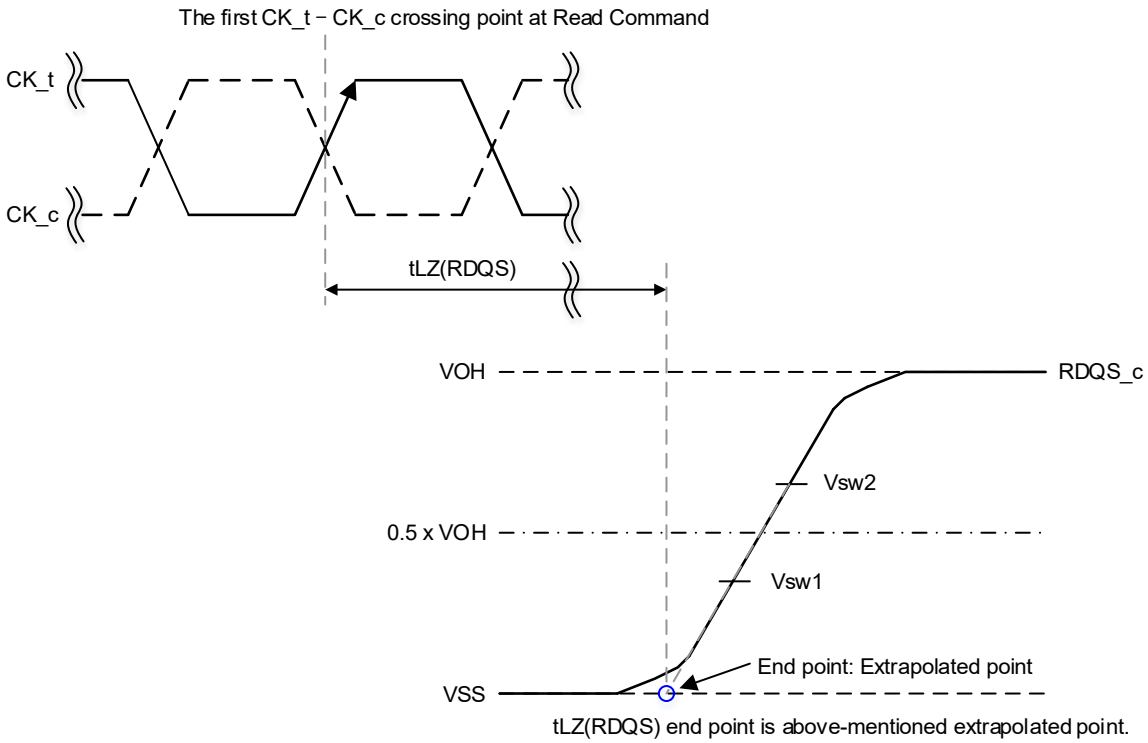

NOTE 1 Conditions for Calibration: VDDQ = 0.5 V, Pull Down Driver Ron = 40ohm, VOH = VDDQ/2
NOTE 2 Termination condition for RDQS_t and RDQS_c = 50ohm to VSS.
NOTE 3 Use the actual VOH value for tHZ and tLZ measurements.

Figure 244 — tLZ(RDQS) method for calculating transitions and end point

12.7.1.1 tLZ(RDQS) and tHZ(RDQS) Calculation for ATE(Automatic Test Equipment (Cont'd)

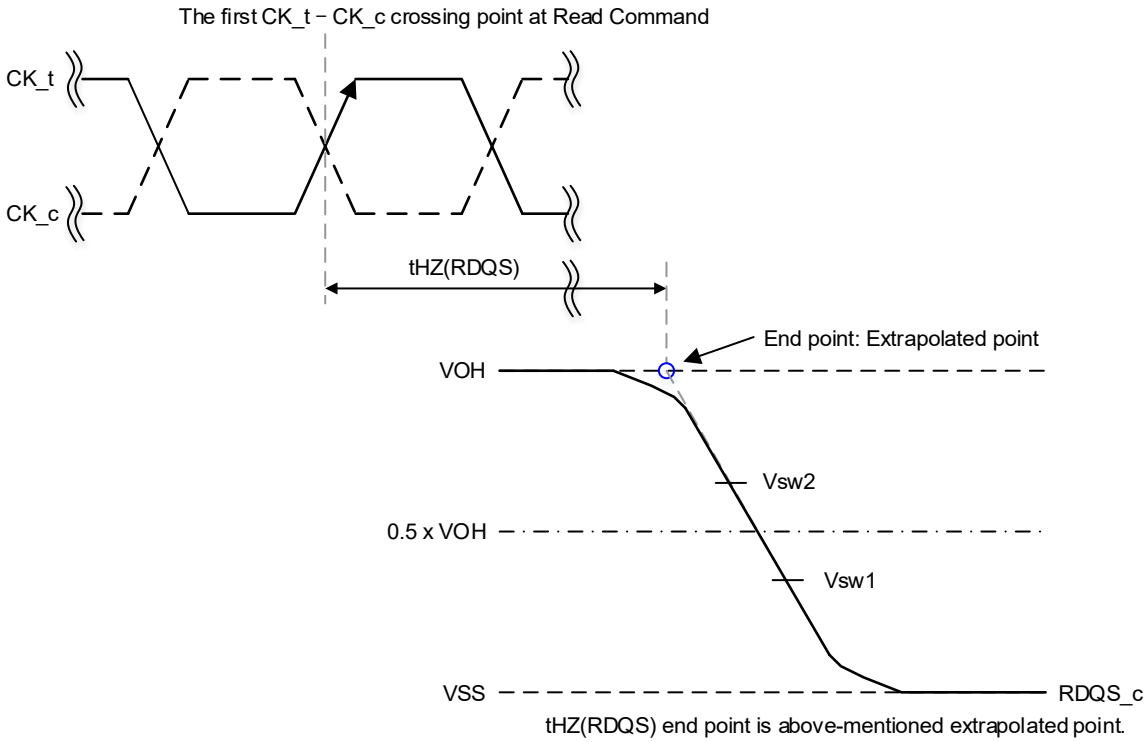

NOTE 1 Conditions for Calibration: VDDQ = 0.5 V, Pull Down Driver Ron = 40ohm, VOH = VDDQ/2
NOTE 2 Termination condition for RDQS_t and RDQS_c = 50ohm to VSS.
NOTE 3 Use the actual VOH value for tHZ and tLZ measurements.

Figure 245 — tHZ(RDQS) method for calculating transitions and end point

Table 402 — Reference Voltage for tLZ(RDQS), tHZ(RDQS) Timing Measurements

Measured Parameter	Measured Parameter Symbol	Vsw1[V]	Vsw2[V]	Notes
RDQS_c low-impedance time from CK_t, CK_c	tLZ(RDQS)	0.4 x VOH	0.6 x VOH	
RDQS_c high impedance time from CK_t, CK_c	tHZ(RDQS)	0.4 x VOH	0.6 x VOH	

12.7.1.2 tLZ(DQ) and tHZ(DQ) Calculation for ATE (Automatic Test Equipment)

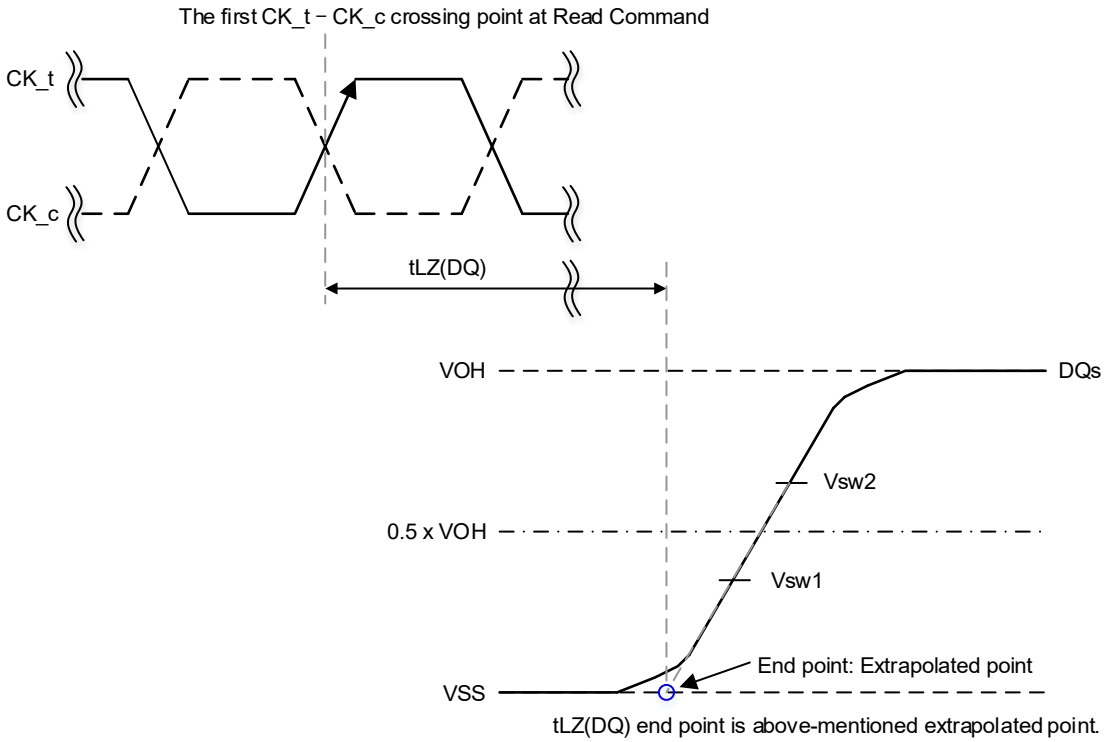

NOTE 1 Conditions for Calibration: VDDQ = 0.5 V, Pull Down Driver Ron = 40ohm, VOH = VDDQ/2
NOTE 2 Termination condition for DQs and DMI = 50ohm to VSS.
NOTE 3 Use the actual VOH value for tHZ and tLZ measurements.

Figure 246 — tLZ(DQ) method for calculating transitions and end point

12.7.1.2 tLZ(DQ) and tHZ(DQ) Calculation for ATE (Automatic Test Equipment) (Cont'd)

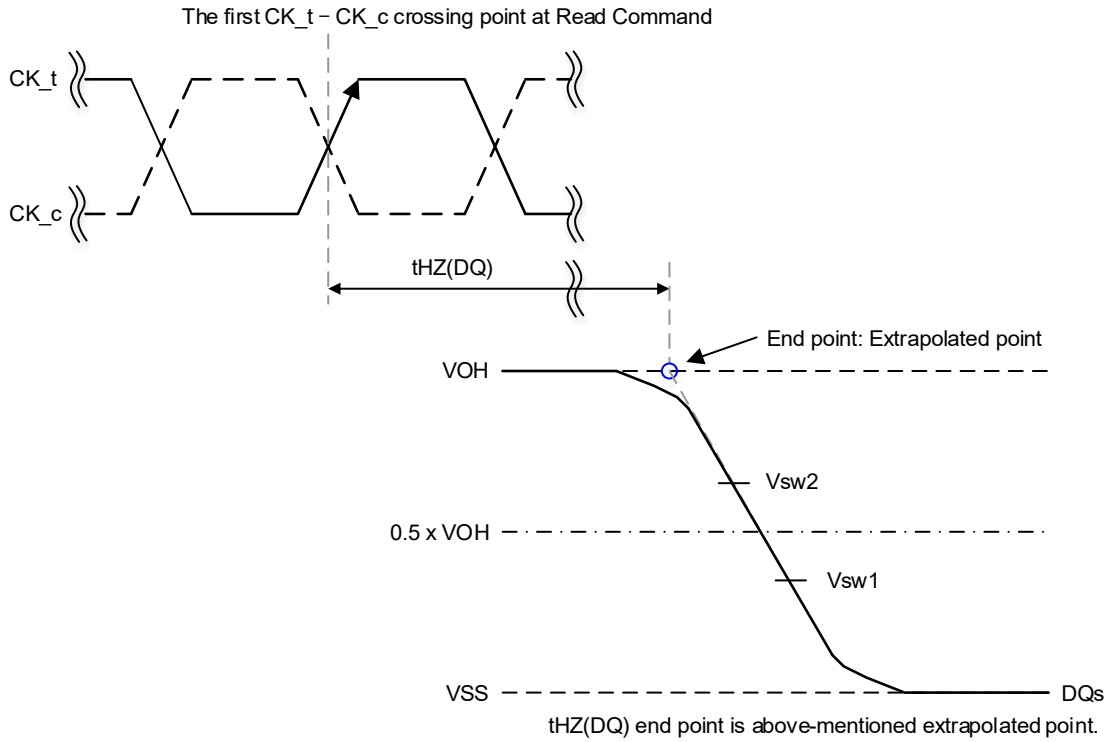

NOTE 1 Conditions for Calibration: VDDQ = 0.5 V, Pull Down Driver Ron = 40ohm, VOH = VDDQ/2
NOTE 2 Termination condition for DQs and DMI = 50ohm to VSS.
NOTE 3 Use the actual VOH value for tHZ and tLZ measurements.

Figure 247 — tHZ(DQ) method for calculating transitions and end point

Table 403 — Reference Voltage for tLZ(DQ), tHZ(DQ) Timing Measurements

Measured Parameter	Measured Parameter Symbol	Vsw1[V]	Vsw2[V]	Notes
DQ low-impedance time from CK_t, CK_c	tLZ(DQ)	0.4 x VOH	0.6 x VOH	
DQ high impedance time from CK_t, CK_c	tHZ(DQ)	0.4 x VOH	0.6 x VOH	

12.7.1.2 tLZ(DQ) and tHZ(DQ) Calculation for ATE (Automatic Test Equipment) (Cont'd)

Table 404 — Read AC Timing

Parameter	Symbol	Min/Max	Data Rate	Unit	Notes
			Up to 6400Mbps		
READ preamble	tRPRE	Min	TBD	tCK(avg)	
READ postamble	tRPST	Min	TBD	tCK(avg)	
RDQS_c low-impedance time from CK_t, CK_c	tLZ(RDQS)	Min	(RL x tCK) + tWCK2CK(Min) + tWCK2DQO(Min) - (tRPRE(Max) x tCK) - TBDps	ps	
RDQS_c high impedance time from CK_t, CK_c	tHZ(RDQS)	Max	(RL x tCK) + tWCK2CK(Max) + BL/n_min + (RPST(Max) x tCK) - TBDps	ps	
DQ low-impedance time from CK_t, CK_c	tLZ(DQ)	Min	(RL x tCK + tWCK2CK(Min) + tDQSQ(Min) -TBDps	ps	
DQ high impedance time from CK_t, CK_c	tHZ(DQ)	Max	(RL x tCK) + tWCK2CK(Max) + tWCK2DQO(Max) + BLn_min -TBDps	ps	

13 Input / Output Capacitance

Table 405 - Input / Output Capacitance

Parameter	Symbol		LPDDR5 5500-533	LPDDR5 6400	Units	Notes
Input Capacitance, CK_t and CK_c	CCK	Min	0.3	0.3	pF	1,2
		Max	1.4	0.8	pF	1,2
Input Capacitance delta, CK_t and CK_c	CDCK	Min	0.0	0.0	pF	1,2,3
		Max	0.09	0.09	pF	1,2,3
Input Capacitance, WCK_t and WCK_c	CWCK	Min	0.3	0.3	pF	1,2
		Max	1.0	0.9	pF	1,2
Input Capacitance delta, WCK_t and WCK_c	CDWCK	Min	0.0	0.0	pF	1,2,4
		Max	0.09	0.09	pF	1,2,4
Input Capacitance, All other input-only pins	CI	Min	0.3	0.3	pF	1,2,5
		Max	1.4	0.8	pF	1,2,5
Input Capacitance delta, All other input-only pins	CDI	Min	-0.1	-0.1	pF	1,2,6
		Max	0.1	0.1	pF	1,2,6
Input/output Capacitance, DQ and DMI	CIO	Min	0.3	0.3	pF	1,2,7
		Max	1.0	0.9	pF	1,2,7
Input/output Capacitance delta, DQ and DMI	CDIO	Min	-0.1	-0.1	pF	1,2,9
		Max	0.1	0.1	pF	1,2,9
Output Capacitance, RDQS_t and RDQS_c	COO	Min	0.3	0.3	pF	1,2
		Max	1.0	0.9	pF	1,2
Output Capacitance delta, RDQS_t and RDQS_c	CDOO	Min	0.0	0.0	pF	1,2,8
		Max	0.1	0.1	pF	1,2,8
Input/output capacitance, ZQ pin	CZQ	Min	0.0	0.0	pF	1,2
		Max	5.0	5.0	pF	1,2

NOTE 1 This parameter applies to die device, including IO capacitance, RDL if needed (does not include package capacitance such as bond wire).
NOTE 2 This parameter is not subject to production test. It is verified by design and characterization. The capacitance is measured according to JEP147 (Procedure for measuring input capacitance using a vector network analyzer (VNA) with VDD1, VDD2, VDDQ, VSS applied and all other pins floating.
NOTE 3 Absolute value of CCK_t - CCK_c.
NOTE 4 Absolute value of CWCK_t - CWCK_c.
NOTE 5 CI applieds to CS, CA0~CA6.
NOTE 6 CDI = CI – Average (CInputn, CCK_t, CCK_c).
NOTE 7 DMI loading matches DQ.
NOTE 8 Absolute value of CRDQS_t - CRDQS_c.

NOTE 9 CDIO = CIO – Average (CDQn, CDMI) in byte-lane.

14 IDD Specification Parameters and Test Conditions

14.1 IDD Measurement Conditions

The following definitions are used within the IDD measurement tables unless stated otherwise:

- LOW: VIN ≤ VIL(DC) MAX
- HIGH: VIN ≥ VIH(DC) MIN
- STABLE: Inputs are stable at a HIGH or LOW level
- SWITCHING: See Tables 333 through 339

Table 406 — Definition of Switching for CA Input Signals

CK_t edge	R1	F1	R2	F2	R3	F3	R4	F4	R5	F5	R6	F6	R7	F7	R8	F8
CS	L	L	L	L	L	L	L	L	L	L	L	L	L	L	L	L
CA0	H	L	L	L	L	H	H	H	H	L	L	L	L	H	H	H
CA1	H	H	H	L	L	L	L	H	H	H	H	L	L	L	L	H
CA2	H	L	L	L	L	H	H	H	H	L	L	L	L	H	H	H
CA3	H	H	H	L	L	L	L	H	H	H	H	L	L	L	L	H
CA4	H	L	L	L	L	H	H	H	H	L	L	L	L	H	H	H
CA5	H	H	H	L	L	L	L	H	H	H	H	L	L	L	L	H
CA6	H	L	L	L	L	H	H	H	H	L	L	L	L	H	H	H

NOTE 1 CS must always be driven LOW.
NOTE 2 50% of CA bus is changing between HIGH and LOW once per clock for the CA bus.
NOTE 3 The pattern is used continuously during IDD measurement for IDD values that require switching on the CA bus.

Table 407 — CA Pattern for IDD4R @ BG mode

Clock Cycle #	CS	Command	CA0	CA1	CA2	CA3	CA4	CA5	CA6	Note
R0	High	Read	H	L	L	L	L	L	L	1
F0	Low		L	H	H	L	L	L	L	
R1	High	DES	L	L	L	L	L	L	L	
F1	Low		L	L	L	L	L	L	L	
R2	High	Read	H	L	L	L	L	L	L	2
F2	Low		L	H	L	H	L	L	L	
R3	Low	CAS (B3)	L	L	H	H	L	L	L	
F3	Low		L	L	L	L	L	L	H	
R4	High	Read	H	L	L	H	H	H	H	3
F4	Low		L	H	H	L	H	H	L	
R5	High	CAS (B3)	L	L	H	H	L	L	L	
F5	Low		L	L	L	L	L	L	H	
R6	High	Read	H	L	L	H	H	H	H	4
F6	Low		L	H	L	H	H	H	L	
R7	Low	DES	L	L	L	L	L	L	L	
F7	Low		L	L	L	L	L	L	L	

NOTE 1 Pattern A is applied to DQs.
NOTE 2 Pattern B is applied to DQs.
NOTE 3 Pattern A' is applied to DQs.
NOTE 4 Pattern B' is applied to DQs.
NOTE 5 The pattern above is applied when WCK to CK frequency ratio is 4:1 and bank organization is BG mode.

14.1 IDD Measurement Conditions (Cont'd)

Table 408 — CA Pattern for IDD4R @ 16B mode

Clock Cycle #	CS	Command	CA0	CA1	CA2	CA3	CA4	CA5	CA6	Note
R0	High	Read	H	L	L	L	L	L	L	1
F0	Low		L	H	H	L	L	L	L	
R1	High	CAS (B3)	L	L	H	H	L	L	L	
F1	Low		L	L	L	L	L	L	H	
R2	High	Read	H	L	L	H	H	H	H	2
F2	Low		L	H	H	L	H	H	L	
R3	Low	DES	L	L	L	L	L	L	L	
F3	Low	DES	L	L	L	L	L	L	L	

NOTE 1 Pattern A is applied to DQs.
NOTE 2 Pattern B is applied to DQs.
NOTE 3 The pattern above is applied when WCK to CK frequency ratio is 4:1 and bank organization is 16B mode. In the case WCK:CK=2:1, the number of DES commands is increased to match tCCD.

Table 409 — CA Pattern for IDD4R @ 8B mode

Clock Cycle #	CS	Command	CA0	CA1	CA2	CA3	CA4	CA5	CA6	Note
R0	High	Read	H	L	L	L	L	L	L	1
F0	Low		L	H	H	L	L	L	L	
R1	Low	DES	L	L	L	L	L	L	L	
F1	Low		L	L	L	L	L	L	L	
R2	Low	DES	L	L	L	L	L	L	L	2
F2	Low		L	L	L	L	L	L	L	
R3	High	CAS (B3)	L	L	H	H	L	L	L	
F3	Low		L	L	L	L	L	L	H	
R4	High	Read	H	L	L	H	H	H	H	3
F4	Low		L	H	H	L	H	H	L	
R5	Low	DES	L	L	L	L	L	L	L	
F5	Low		L	L	L	L	L	L	L	
R6	Low	DES	L	L	L	L	L	L	L	4
F6	Low		L	L	L	L	L	L	L	
R7	Low	DES	L	L	L	L	L	L	L	
F7	Low		L	L	L	L	L	L	L	

NOTE 1 Pattern A is applied to DQs.
NOTE 2 Pattern B is applied to DQs.
NOTE 3 Pattern CA' is applied to DQs.
NOTE 4 Pattern DB' is applied to DQs.
NOTE 5 The pattern above is applied when WCK to CK frequency ratio is 4:1 and bank organization is 8B mode. In the case WCK:CK=2:1, the number of DES commands is increased to match tCCD.

14.1 IDD Measurement Conditions (Cont'd)

Table 410 — CA Pattern for IDD4W@ BG mode

Clock Cycle #	CS	Command	CA0	CA1	CA2	CA3	CA4	CA5	CA6	Note
R0	High	WRITE	L	H	H	L	L	L	L	1
F0	Low		L	H	H	L	L	L	L	
R1	Low	DES	L	L	L	L	L	L	L	
F1	Low		L	L	L	L	L	L	L	
R2	High	WRITE	L	H	H	L	L	L	L	2
F2	Low		L	H	L	H	L	L	L	
R3	Low	DES	L	L	L	L	L	L	L	
F3	Low		L	L	L	L	L	L	L	
R4	High	WRITE	L	H	H	H	H	H	H	1
F4	Low		L	H	H	L	H	H	L	
R5	Low	DES	L	L	L	L	L	L	L	
F5	Low		L	L	L	L	L	L	L	
R6	High	WRITE	L	H	H	H	H	H	H	2
F6	Low		L	H	L	H	H	H	L	
R7	Low	DES	L	L	L	L	L	L	L	
F7	Low		L	L	L	L	L	L	L	

NOTE 1 Pattern A is applied to DQs.
NOTE 2 Pattern B is applied to DQs.
NOTE 3 The pattern above is applied when WCK to CK frequency ratio is 4:1 and bank organization is BG mode.

Table 411 — CA Pattern for IDD4W @ 16B mode

Clock Cycle #	CS	Command	CA0	CA1	CA2	CA3	CA4	CA5	CA6	Note
R0	High	WRITE	L	H	H	L	L	L	L	1
F0	Low		L	H	H	L	L	L	L	
R1	Low	DES	L	L	L	L	L	L	L	
F1	Low	DES	L	L	L	L	L	L	L	
R2	High	WRITE	L	H	H	H	H	H	H	2
F2	Low		L	H	H	L	H	H	L	
R3	Low	DES	L	L	L	L	L	L	L	
F3	Low	DES	L	L	L	L	L	L	L	

NOTE 1 Pattern A is applied to DQs.
NOTE 2 Pattern B is applied to DQs.
NOTE 3 The pattern above is applied when WCK to CK frequency ratio is 4:1 and bank organization is 16B mode. In the case WCK:CK=2:1, the number of DES commands is increased to match tCCD.

14.1 IDD Measurement Conditions (Cont'd)

Table 412 — CA Pattern for IDD4W@ 8B mode

Clock Cycle #	CS	Command	CA0	CA1	CA2	CA3	CA4	CA5	CA6	Note
R0	High	WRITE	L	H	H	L	L	L	L	1
F0	Low		L	H	H	L	L	L	L	
R1	Low	DES	L	L	L	L	L	L	L	
F1	Low		L	L	L	L	L	L	L	
R2	Low	DES	L	L	L	L	L	L	L	2
F2	Low		L	L	L	L	L	L	L	
R3	Low	DES	L	L	L	L	L	L	L	
F3	Low		L	L	L	L	L	L	L	
R4	High	WRITE	L	H	H	H	H	H	H	1
F4	Low		L	H	H	L	H	H	L	
R5	Low	DES	L	L	L	L	L	L	L	
F5	Low		L	L	L	L	L	L	L	
R6	Low	DES	L	L	L	L	L	L	L	2
F6	Low		L	L	L	L	L	L	L	
R7	Low	DES	L	L	L	L	L	L	L	
F7	Low		L	L	L	L	L	L	L	

NOTE 1 Pattern A is applied to DQs.
NOTE 2 Pattern B is applied to DQs.
NOTE 3 The pattern above is applied when WCK to CK frequency ratio is 4:1 and bank organization is 8B mode. In the case WCK:CK=2:1, the number of DES commands is increased to match tCCD.

14.1 IDD Measurement Conditions (Cont'd)

Table 413 — Data Pattern for IDD4R @ DBI Off

DQs – IDD4R DBI OFF											# of 1`s
Type	BL	DQ[7]	DQ[6]	DQ[5]	DQ[4]	DQ[3]	DQ[2]	DQ[1]	DQ[0]	DBI	
Pattern A	BL0	1	1	1	1	1	1	1	1	0	8
	BL1	1	1	1	1	0	0	0	0	0	4
	BL2	0	0	0	0	0	0	0	0	0	0
	BL3	0	0	0	0	1	1	1	1	0	4
	BL4	0	0	0	0	0	0	1	1	0	2
	BL5	0	0	0	0	1	1	1	1	0	4
	BL6	1	1	1	1	1	1	0	0	0	6
	BL7	1	1	1	1	0	0	0	0	0	4
	BL8	1	1	1	1	1	1	1	1	0	8
	BL9	1	1	1	1	0	0	0	0	0	4
	BL10	0	0	0	0	0	0	0	0	0	0
	BL11	0	0	0	0	1	1	1	1	0	4
	BL12	0	0	0	0	0	0	1	1	0	2
	BL13	0	0	0	0	1	1	1	1	0	4
	BL14	1	1	1	1	1	1	0	0	0	6
	BL15	1	1	1	1	0	0	0	0	0	4
Pattern B	BL0	1	1	1	1	1	1	0	0	0	6
	BL1	1	1	1	1	0	0	0	0	0	4
	BL2	0	0	0	0	0	0	1	1	0	2
	BL3	0	0	0	0	1	1	1	1	0	4
	BL4	0	0	0	0	0	0	0	0	0	0
	BL5	0	0	0	0	1	1	1	1	0	4
	BL6	1	1	1	1	1	1	1	1	0	8
	BL7	1	1	1	1	0	0	0	0	0	4
	BL8	0	0	0	0	0	0	1	1	0	2
	BL9	0	0	0	0	1	1	1	1	0	4
	BL10	1	1	1	1	1	1	0	0	0	6
	BL11	1	1	1	1	0	0	0	0	0	4
	BL12	1	1	1	1	1	1	1	1	0	8
	BL13	1	1	1	1	0	0	0	0	0	4
	BL14	0	0	0	0	0	0	0	0	0	0
	BL15	0	0	0	0	1	1	1	1	0	4

14.1 IDD Measurement Conditions (Cont'd)

Table 340 — Data Pattern for IDD4R @ DBI Off (Cont'd)

DQs – IDD4R DBI OFF											# of 1`s
Type	BL	DQ[7]	DQ[6]	DQ[5]	DQ[4]	DQ[3]	DQ[2]	DQ[1]	DQ[0]	DBI	
Pattern A'	BL0	1	1	1	1	1	1	1	1	0	8
	BL1	1	1	1	1	0	0	0	0	0	4
	BL2	0	0	0	0	0	0	0	0	0	0
	BL3	0	0	0	0	1	1	1	1	0	4
	BL4	0	0	0	0	0	0	1	1	0	2
	BL5	0	0	0	0	1	1	1	1	0	4
	BL6	1	1	1	1	1	1	0	0	0	6
	BL7	1	1	1	1	0	0	0	0	0	4
	BL8	1	1	1	1	1	1	1	1	0	8
	BL9	1	1	1	1	0	0	0	0	0	4
	BL10	0	0	0	0	0	0	0	0	0	0
	BL11	0	0	0	0	1	1	1	1	0	4
	BL12	0	0	0	0	0	0	1	1	0	2
	BL13	0	0	0	0	1	1	1	1	0	4
	BL14	1	1	1	1	1	1	0	0	0	6
	BL15	1	1	1	1	0	0	0	0	0	4
Pattern B'	BL0	0	0	0	0	0	0	1	1	0	2
	BL1	0	0	0	0	1	1	1	1	0	4
	BL2	1	1	1	1	1	1	0	0	0	6
	BL3	1	1	1	1	0	0	0	0	0	4
	BL4	1	1	1	1	1	1	1	1	0	8
	BL5	1	1	1	1	0	0	0	0	0	4
	BL6	0	0	0	0	0	0	0	0	0	0
	BL7	0	0	0	0	1	1	1	1	0	4
	BL8	1	1	1	1	1	1	0	0	0	6
	BL9	1	1	1	1	0	0	0	0	0	4
	BL10	0	0	0	0	0	0	1	1	0	2
	BL11	0	0	0	0	1	1	1	1	0	4
	BL12	0	0	0	0	0	0	0	0	0	0
	BL13	0	0	0	0	1	1	1	1	0	4
	BL14	1	1	1	1	1	1	1	1	0	8
	BL15	1	1	1	1	0	0	0	0	0	4
# of 1`s		32	32	32	32	32	32	32	32	0	

NOTE 1 Pattern A' is defined by B3 ordering change based on pattern A.
NOTE 2 Pattern B' is defined by B3 ordering change based on pattern B.

14.1 IDD Measurement Conditions (Cont'd)

Table 414 — Data Pattern for IDD4W @ DBI Off

DQs – IDD4W DBI OFF											# of 1`s
Type	BL	DQ[7]	DQ[6]	DQ[5]	DQ[4]	DQ[3]	DQ[2]	DQ[1]	DQ[0]	DBI	
Pattern A	BL0	1	1	1	1	1	1	1	1	0	8
	BL1	1	1	1	1	0	0	0	0	0	4
	BL2	0	0	0	0	0	0	0	0	0	0
	BL3	0	0	0	0	1	1	1	1	0	4
	BL4	0	0	0	0	0	0	1	1	0	2
	BL5	0	0	0	0	1	1	1	1	0	4
	BL6	1	1	1	1	1	1	0	0	0	6
	BL7	1	1	1	1	0	0	0	0	0	4
	BL8	1	1	1	1	1	1	1	1	0	8
	BL9	1	1	1	1	0	0	0	0	0	4
	BL10	0	0	0	0	0	0	0	0	0	0
	BL11	0	0	0	0	1	1	1	1	0	4
	BL12	0	0	0	0	0	0	1	1	0	2
	BL13	0	0	0	0	1	1	1	1	0	4
	BL14	1	1	1	1	1	1	0	0	0	6
	BL15	1	1	1	1	0	0	0	0	0	4
Pattern B	BL0	1	1	1	1	1	1	0	0	0	6
	BL1	1	1	1	1	0	0	0	0	0	4
	BL2	0	0	0	0	0	0	1	1	0	2
	BL3	0	0	0	0	1	1	1	1	0	4
	BL4	0	0	0	0	0	0	0	0	0	0
	BL5	0	0	0	0	1	1	1	1	0	4
	BL6	1	1	1	1	1	1	1	1	0	8
	BL7	1	1	1	1	0	0	0	0	0	4
	BL8	0	0	0	0	0	0	1	1	0	2
	BL9	0	0	0	0	1	1	1	1	0	4
	BL10	1	1	1	1	1	1	0	0	0	6
	BL11	1	1	1	1	0	0	0	0	0	4
	BL12	1	1	1	1	1	1	1	1	0	8
	BL13	1	1	1	1	0	0	0	0	0	4
	BL14	0	0	0	0	0	0	0	0	0	0
	BL15	0	0	0	0	1	1	1	1	0	4
# of 1`s		16	16	16	16	16	16	16	16	0	

14.1 IDD Measurement Conditions (Cont'd)

Table 415 — Data Pattern for IDD4R @ DBI On

DQs – IDD4R DBI ON											# of 1`s
Type	BL	DQ[7]	DQ[6]	DQ[5]	DQ[4]	DQ[3]	DQ[2]	DQ[1]	DQ[0]	DBI	
Pattern A	BL0	0	0	0	0	0	0	0	0	1	1
	BL1	1	1	1	1	0	0	0	0	0	4
	BL2	0	0	0	0	0	0	0	0	0	0
	BL3	0	0	0	0	1	1	1	1	0	4
	BL4	0	0	0	0	0	0	1	1	0	2
	BL5	0	0	0	0	1	1	1	1	0	4
	BL6	0	0	0	0	0	0	1	1	1	3
	BL7	1	1	1	1	0	0	0	0	0	4
	BL8	0	0	0	0	0	0	0	0	1	1
	BL9	1	1	1	1	0	0	0	0	0	4
	BL10	0	0	0	0	0	0	0	0	0	0
	BL11	0	0	0	0	1	1	1	1	0	4
	BL12	0	0	0	0	0	0	1	1	0	2
	BL13	0	0	0	0	1	1	1	1	0	4
	BL14	0	0	0	0	0	0	1	1	1	3
	BL15	1	1	1	1	0	0	0	0	0	4
Pattern B	BL0	0	0	0	0	0	0	1	1	1	3
	BL1	1	1	1	1	0	0	0	0	0	4
	BL2	0	0	0	0	0	0	1	1	0	2
	BL3	0	0	0	0	1	1	1	1	0	4
	BL4	0	0	0	0	0	0	0	0	0	0
	BL5	0	0	0	0	1	1	1	1	0	4
	BL6	0	0	0	0	0	0	0	0	1	1
	BL7	1	1	1	1	0	0	0	0	0	4
	BL8	0	0	0	0	0	0	1	1	0	2
	BL9	0	0	0	0	1	1	1	1	0	4
	BL10	0	0	0	0	0	0	1	1	1	3
	BL11	1	1	1	1	0	0	0	0	0	4
	BL12	0	0	0	0	0	0	0	0	1	1
	BL13	1	1	1	1	0	0	0	0	0	4
	BL14	0	0	0	0	0	0	0	0	0	0
	BL15	0	0	0	0	1	1	1	1	0	4

14.1 IDD Measurement Conditions (Cont'd)

Table 342 — Data Pattern for IDD4R @ DBI Off (Cont'd)

DQs – IDD4R DBI ON											# of 1`s
Type	BL	DQ[7]	DQ[6]	DQ[5]	DQ[4]	DQ[3]	DQ[2]	DQ[1]	DQ[0]	DBI	
Pattern A'	BL0	0	0	0	0	0	0	0	0	1	1
	BL1	1	1	1	1	0	0	0	0	0	4
	BL2	0	0	0	0	0	0	0	0	0	0
	BL3	0	0	0	0	1	1	1	1	0	4
	BL4	0	0	0	0	0	0	1	1	0	2
	BL5	0	0	0	0	1	1	1	1	0	4
	BL6	0	0	0	0	0	0	1	1	1	3
	BL7	1	1	1	1	0	0	0	0	0	4
	BL8	0	0	0	0	0	0	0	0	1	1
	BL9	1	1	1	1	0	0	0	0	0	4
	BL10	0	0	0	0	0	0	0	0	0	0
	BL11	0	0	0	0	1	1	1	1	0	4
	BL12	0	0	0	0	0	0	1	1	0	2
	BL13	0	0	0	0	1	1	1	1	0	4
	BL14	0	0	0	0	0	0	1	1	1	3
	BL15	1	1	1	1	0	0	0	0	0	4
Pattern B'	BL0	0	0	0	0	0	0	1	1	0	2
	BL1	0	0	0	0	1	1	1	1	0	4
	BL2	0	0	0	0	0	0	1	1	1	3
	BL3	1	1	1	1	0	0	0	0	0	4
	BL4	0	0	0	0	0	0	0	0	1	1
	BL5	1	1	1	1	0	0	0	0	0	4
	BL6	0	0	0	0	0	0	0	0	0	0
	BL7	0	0	0	0	1	1	1	1	0	4
	BL8	0	0	0	0	0	0	1	1	1	3
	BL9	1	1	1	1	0	0	0	0	0	4
	BL10	0	0	0	0	0	0	1	1	0	2
	BL11	0	0	0	0	1	1	1	1	0	4
	BL12	0	0	0	0	0	0	0	0	0	0
	BL13	0	0	0	0	1	1	1	1	0	4
	BL14	0	0	0	0	0	0	0	0	1	1
	BL15	1	1	1	1	0	0	0	0	0	4
# of 1's		16	16	16	16	16	16	32	32	16	

NOTE 1 Pattern A' is defined by B3 ordering change based on pattern A.
NOTE 2 Pattern B' is defined by B3 ordering change based on pattern B.

14.1 IDD Measurement Conditions (Cont'd)

Table 416 — Data Pattern for IDD4W @ DBI On

DQs – IDD4W DBI ON											# of 1`s
Type	BL	DQ[7]	DQ[6]	DQ[5]	DQ[4]	DQ[3]	DQ[2]	DQ[1]	DQ[0]	DBI	
Pattern A	BL0	0	0	0	0	0	0	0	0	1	1
	BL1	1	1	1	1	0	0	0	0	0	4
	BL2	0	0	0	0	0	0	0	0	0	0
	BL3	0	0	0	0	1	1	1	1	0	4
	BL4	0	0	0	0	0	0	1	1	0	2
	BL5	0	0	0	0	1	1	1	1	0	4
	BL6	0	0	0	0	0	0	1	1	1	3
	BL7	1	1	1	1	0	0	0	0	0	4
	BL8	0	0	0	0	0	0	0	0	1	1
	BL9	1	1	1	1	0	0	0	0	0	4
	BL10	0	0	0	0	0	0	0	0	0	0
	BL11	0	0	0	0	1	1	1	1	0	4
	BL12	0	0	0	0	0	0	1	1	0	2
	BL13	0	0	0	0	1	1	1	1	0	4
	BL14	0	0	0	0	0	0	1	1	1	3
	BL15	1	1	1	1	0	0	0	0	0	4
Pattern B	BL0	0	0	0	0	0	0	1	1	1	3
	BL1	1	1	1	1	0	0	0	0	0	4
	BL2	0	0	0	0	0	0	1	1	0	2
	BL3	0	0	0	0	1	1	1	1	0	4
	BL4	0	0	0	0	0	0	0	0	0	0
	BL5	0	0	0	0	1	1	1	1	0	4
	BL6	0	0	0	0	0	0	0	0	1	1
	BL7	1	1	1	1	0	0	0	0	0	4
	BL8	0	0	0	0	0	0	1	1	0	2
	BL9	0	0	0	0	1	1	1	1	0	4
	BL10	0	0	0	0	0	0	1	1	1	3
	BL11	1	1	1	1	0	0	0	0	0	4
	BL12	0	0	0	0	0	0	0	0	1	1
	BL13	1	1	1	1	0	0	0	0	0	4
	BL14	0	0	0	0	0	0	0	0	0	0
	BL15	0	0	0	0	1	1	1	1	0	4
# of 1`s		8	8	8	8	8	8	16	16	8	

14.2 IDD Specifications

Table 417 — LPDDR5 IDD Specification Parameters and Operating Conditions

Parameter / Condition	Symbol	Power Supply	Note
Operating one bank active-Precharge current: tCK = tCKmin; tRC = tRCmin; CS is LOW between valid commands; CA bus inputs are switching; Data bus inputs are stable RDQS_t is stable (if Link ECC is enabled) ODT disabled WCK inputs are stable	$IDD0_{1}$	VDD1	9
	$IDD0_{2H}$	VDD2H	9
	$IDD0_{2L}$	VDD2L	9
	$IDD0_{Q}$	VDDQ	3
Idle power-down standby current: tCK = tCKmin; Power-down entry command is issued CS is LOW; All banks are idle; CA bus inputs are switching; Data bus inputs are stable; RDQS_t is stable (if Link ECC is enabled) ODT disabled WCK inputs are stable	$IDD2P_{1}$	VDD1	
	$IDD2P_{2H}$	VDD2H	
	$IDD2P_{2L}$	VDD2L	
	$IDD2P_{Q}$	VDDQ	3
Idle power-down standby current with clock stop: CK_t =LOW, CK_c =HIGH; CS is LOW; All banks are idle; CA bus inputs are stable; Data bus inputs are stable RDQS_t is stable (if Link ECC is enabled) ODT disabled WCK inputs are stable	$IDD2PS_{1}$	VDD1	
	$IDD2PS_{2H}$	VDD2H	
	$IDD2PS_{2L}$	VDD2L	
	$IDD2PS_{Q}$	VDDQ	3
Idle non power-down standby current: tCK = tCKmin; CS is LOW; All banks are idle; CA bus inputs are switching; Data bus inputs are stable RDQS_t is stable (if Link ECC is enabled) ODT disabled WCK inputs are stable	$IDD2N_{1}$	VDD1	
	$IDD2N_{2H}$	VDD2H	
	$IDD2N_{2L}$	VDD2L	
	$IDD2N_{Q}$	VDDQ	3
Idle non power-down standby current with clock stopped: CK_t=LOW; CK_c=HIGH; CS is LOW; All banks are idle; CA bus inputs are stable; Data bus inputs are stable RDQS_t is stable (if Link ECC is enabled) ODT disabled WCK inputs are stable	$IDD2NS_{1}$	VDD1	
	$IDD2NS_{2H}$	VDD2H	
	$IDD2NS_{2L}$	VDD2L	
	$IDD2NS_{Q}$	VDDQ	3
Active power-down standby current: tCK = tCKmin; CS is LOW; One bank is active; Power-down entry command is issued CA bus inputs are switching; Data bus inputs are stable RDQS_t is stable (if Link ECC is enabled) ODT disabled WCK inputs are stable	$IDD3P_{1}$	VDD1	9
	$IDD3P_{2H}$	VDD2H	9
	$IDD3P_{2L}$	VDD2L	9
	$IDD3P_{Q}$	VDDQ	3

14.2 IDD Specifications (Cont'd)

Table 344 — Data Pattern for IDD4R @ DBI Off (Cont'd)

Parameter / Condition	Symbol	Power Supply	Note
Active power-down standby current with clock stop: Power-down entry command is issued CK_t=LOW, CK_c=HIGH; CS is LOW; One bank is active; CA bus inputs are stable; Data bus inputs are stable RDQS_t is stable (if Link ECC is enabled) ODT disabled WCK inputs are stable and static	$IDD3PS_{1}$	VDD1	9
	$IDD3PS_{2H}$	VDD2H	9
	$IDD3PS_{2L}$	VDD2L	8, 9
	$IDD3PS_{Q}$	VDDQ	4
Active non-power-down standby current: tCK = tCKmin; CS is LOW; One bank is active; CA bus inputs are switching; Data bus inputs are stable RDQS_t is stable (if Link ECC is enabled) ODT disabled WCK inputs are stable and static	$IDD3N_{1}$	VDD1	9
	$IDD3N_{2H}$	VDD2H	9
	$IDD3N_{2L}$	VDD2L	8, 9
	$IDD3N_{Q}$	VDDQ	4
Active non-power-down standby current with clock stopped: CK_t=LOW, CK_c=HIGH; CS is LOW; One bank is active; CA bus inputs are stable; Data bus inputs are stable RDQS_t is stable (if Link ECC is enabled) ODT disabled WCK inputs are stable and static	$IDD3NS_{1}$	VDD1	9
	$IDD3NS_{2H}$	VDD2H	9
	$IDD3NS_{2L}$	VDD2L	8, 9
	$IDD3NS_{Q}$	VDDQ	4
Operating burst READ current @ BG Mode tCK = tCKmin; tWCK=tWCKmin; CS is LOW between valid commands; **One bank in each bank group 1 and 2 is active;** BL = 16 or 32 ; RL = RLmin; CA bus inputs are switching; 50% data change each burst transfer ODT disabled	$IDD4R_{1}$	VDD1	
	$IDD4R_{2H}$	VDD2H	
	$IDD4R_{2L}$	VDD2L	8
	$IDD4R_{Q}$	VDDQ	5
Operating burst READ current @ 8/16Bank Mode tCK = tCKmin; tWCK=tWCKmin; CS is LOW between valid commands; **One banks is active;** BL = 16 or 32 @ 16bank mode, BL=32 @ 8bank mode; RL = RLmin; CA bus inputs are switching; 50% data change each burst transfer ODT disabled	$IDD4R_{1}$	VDD1	
	$IDD4R_{2H}$	VDD2H	
	$IDD4R_{2L}$	VDD2L	8
	$IDD4R_{Q}$	VDDQ	5
Operating burst WRITE current @ BG Mode tCK = tCKmin; tWCK=tWCKmin; CS is LOW between valid commands; **One bank in each bank group 1 and 2 is active;** BL = 16 or 32 ; WL = WLmin; CA bus inputs are switching; 50% data change each burst transfer RDQS_t is stable (if Link ECC is enabled) ODT disabled	$IDD4W_{1}$	VDD1	
	$IDD4W_{2H}$	VDD2H	
	$IDD4W_{2L}$	VDD2L	8
	$IDD4W_{Q}$	VDDQ	4

14.2 IDD Specifications (Cont'd)

Table 344 — Data Pattern for IDD4R @ DBI Off (Cont'd)

Parameter / Condition	Symbol	Power Supply	Note
Operating burst WRITE current @ 8/16Bank Mode tCK = tCKmin; tWCK=tWCKmin; CS is LOW between valid commands; **One banks is active;** BL = 16 or 32 @ 16bank mode, BL=32 @ 8bank mode ; WL = WLmin; CA bus inputs are switching; 50% data change each burst transfer RDQS_t is stable (if Link ECC is enabled) ODT disabled	$IDD4W_1$	VDD1	
	$IDD4W_{2H}$	VDD2H	
	$IDD4W_{2L}$	VDD2L	8
	$IDD4W_Q$	VDDQ	4

All-bank REFRESH Burst current:
tCK = tCKmin;
CS is LOW between valid commands;
tRC = tRFCabmin;
Burst refresh;
CA bus inputs are switching;
Data bus inputs are stable;
RDQS_t is stable (if Link ECC is enabled)
ODT disabled
WCK inputs are stable and static
	$IDD5_1$	VDD1	

	$IDD5_{2H}$	VDD2H	
	$IDD5_{2L}$	VDD2L	8
	$IDD5_Q$	VDDQ	4

All-bank REFRESH Average current:
tCK = tCKmin;
CS is LOW between valid commands;
tRC = tREFI;
CA bus inputs are switching;
Data bus inputs are stable;
RDQS_t is stable (if Link ECC is enabled)
ODT disabled
WCK inputs are stable and static
	$IDD5AB_1$	VDD1	

	$IDD5AB_{2H}$	VDD2H	
	$IDD5AB_{2L}$	VDD2L	8
	$IDD5AB_Q$	VDDQ	4

Per-bank REFRESH Average current:
tCK = tCKmin;
CS is LOW between valid commands;
tRC = tREFI/8;
CA bus inputs are switching;
Data bus inputs are stable;
RDQS_t is stable (if Link ECC is enabled)
ODT disabled
WCK inputs are stable and static
	$IDD5PB_1$	VDD1	

	$IDD5PB_{2H}$	VDD2H	
	$IDD5PB_{2L}$	VDD2L	8
	$IDD5PB_Q$	VDDQ	4
Power down Self refresh current: CK_t=LOW, CK_c=HIGH; CS is LOW; CA bus inputs are stable; Data bus inputs are stable; Maximum 1x Self-Refresh Rate; (≤85°C) Maximum TBDx Self-Refresh Rate; (>85°C) RDQS_t is stable (if Link ECC is enabled) ODT disabled WCK inputs are stable and static	$IDD6_1$	VDD1	6,7
	$IDD6_{2H}$	VDD2H	6,7
	$IDD6_{2L}$	VDD2L	6,7,8
	$IDD6_Q$	VDDQ	4,6,7,8

14.2 IDD Specifications (Cont'd)

Table 344 — Data Pattern for IDD4R @ DBI Off (Cont'd)

Parameter / Condition	Symbol	Power Supply	Note
Deep sleep mode current: CK_t=LOW, CK_c=HIGH; CS is LOW; CA bus inputs are stable; Data bus inputs are stable; Maximum 1x Self-Refresh Rate; (≤85°C) Maximum TBDx Self-Refresh Rate; (>85°C) RDQS_t is stable (if Link ECC is enabled) ODT disabled WCK inputs are stable and static	$IDD6_{DS1}$	VDD1	6,7,~~8~~
	$IDD6_{DS2H}$	VDD2H	6,7
	$IDD6_{DS2L}$	VDD2L	6,7,8
	$IDD6_{DSQ}$	VDDQ	4,6,7

NOTE 1 Published IDD values are the maximum of the distribution of the arithmetic mean.
NOTE 2 ODT disabled. MR11 OP[6:4] = 000_B
NOTE 3 IDD current specifications are tested after the device is properly initialized.
NOTE 4 Measured currents are the summation of VDDQ and VDD2H / VDD2L.
NOTE 5 Guaranteed by design with output load = 5pF and RON = 40 ohm.
NOTE 6 The 1x Self-Refresh Rate is the rate at which the LPDDR5 device is refreshed internally during Self-Refresh, before going into the elevated Temperature range.
NOTE 7 This is the general definition that applies to full array Self Refresh.
NOTE 8 When MR13 OP[7] is high, single VDD2 rail, VDD2L Current shall be added to VDD2H Current.
NOTE 9 IDD values can be different according to the bank organization set by MR3 OP[4:3].
NOTE 10 When DVFSC is enabled, the minimum tCK shall be set by following DVFSC operating frequency.

15 Electrical Characteristics and AC Timing

15.1 Clock Specification

The jitter specified is a random jitter meeting a Gaussian distribution. Input clocks violating the min/max values may result in malfunction of the LPDDR5 device.

15.1.1 Definition for tCK(avg) and nCK

tCK(avg) is calculated as the average clock period across any consecutive 200 cycle window, where each clock period is calculated from rising edge to rising edge.

$$tCK(avg) = \left(\sum_{j=1}^{N} tCKj \right) / N$$

$$where\ N = 200$$

Unit "tCK(avg)" represents the actual clock average tCK(avg) of the input clock under operation. Unit "nCK" represents one clock cycle of the input clock, counting the actual clock edges. tCK(avg) may change by up to +/-1% within a 100 clock cycle window, provided that all jitter and timing specs are met.

15.1.2 Definition for tCK(abs)

tCK(abs) is defined as the absolute clock period, as measured from one rising edge to the next consecutive rising edge.

tCK(abs) is not subject to production test.

15.1.3 Definition for tCH(avg) and tCL(avg)

tCH(avg) is defined as the average high pulse width, as calculated across any consecutive 200 high pulses.

$$CH(avg) = \left(\sum_{j=1}^{N} tCHj \right) / (N \times tCK(avg))$$

$$where\ N = 200$$

tCL(avg) is defined as the average low pulse width, as calculated across any consecutive 200 low pulses.

$$tCL(avg) = \left(\sum_{j=1}^{N} tCLj \right) / (N \times tCK(avg))$$

$$where\ N = 200$$

15.1.4 Definition for tCH(abs) and tCL(abs)

tCH(abs) is the absolute instantaneous clock high pulse width, as measured from one rising edge to the following falling edge.

tCL(abs) is the absolute instantaneous clock low pulse width, as measured from one falling edge to the following rising edge.

Both tCH(abs) and tCL(abs) are not subject to production test.

15.1.5 Definition for tJIT(per)

tJIT(per) is the single period jitter defined as the largest deviation of any signal tCK from tCK(avg).

tJIT(per) = Min/max of {tCKi - tCK(avg) where i = 1 to 200}.

tJIT(per),act is the actual clock jitter for a given system.

tJIT(per),allowed is the specified allowed clock period jitter.

tJIT(per) is not subject to production test.

15.1.6 Definition for tJIT(cc)

tJIT(cc) is defined as the absolute difference in clock period between two consecutive clock cycles.

tJIT(cc) = Max of |{tCK(i +1) - tCK(i)}|.

tJIT(cc) defines the cycle to cycle jitter.

tJIT(cc) is not subject to production test.

15.1.7 Clock Timing

Table 418 — Clock AC Timings for 5/10/67/133MHz

Parameter	Symbol	5MHz		10MHz		67MHz		133MHz		Units	Notes
		Min	Max	Min	Max	Min	Max	Min	Max		
Average clock period	tCK(avg)	200	200	100	200	14.93	200	7.5	200	ns	
Average High pulse width	tCH(avg)	0.46	0.54	0.46	0.54	0.46	0.54	0.46	0.54	tCK(avg)	
Average Low pulse width	tCL(avg)	0.46	0.54	0.46	0.54	0.46	0.54	0.46	0.54	tCK(avg)	
Absolute clock period	tCK(abs)	tCK(avg) MIN + tJIT(per) MIN	-	tCK(avg) MIN + tJIT(per) MIN	-	tCK(avg) MIN + tJIT(per) MIN	-	tCK(avg) MIN + tJIT(per) MIN	-	ns	
Absolute High clock pulse width	tCH(abs)	0.43	0.57	0.43	0.57	0.43	0.57	0.43	0.57	tCK(avg)	
Absolute Low clock pulse width	tCL(abs)	0.43	0.57	0.43	0.57	0.43	0.57	0.43	0.57	tCK(avg)	
Clock period jitter	tJIT(per)	-11200	11200	-5600	5600	-840	840	-430	430	ps	
Maximum Clock Jitter between consecutive cycles	tJIT(cc)	-	22400	-	11200	-	1680	-	860	ps	

15.1.7 Clock Timing (Cont'd)

Table 419 — Clock AC Timings for 200/267/344/400MHz

Parameter	Symbol	200MHz		267MHz		344MHz		400MHz		Units	Notes
		Min	Max	Min	Max	Min	Max	Min	Max		
Average clock period	tCK(avg)	5	200	3.75	200	2.9	200	2.5	200	ns	
Average High pulse width	tCH(avg)	0.46	0.54	0.46	0.54	0.46	0.54	0.46	0.54	tCK(avg)	
Average Low pulse width	tCL(avg)	0.46	0.54	0.46	0.54	0.46	0.54	0.46	0.54	tCK(avg)	
Absolute clock period	tCK(abs)	tCK(avg) MIN + tJIT(per) MIN	-	tCK(avg) MIN + tJIT(per) MIN	-	tCK(avg) MIN + tJIT(per) MIN	-	tCK(avg) MIN + tJIT(per) MIN	-	ns	
Absolute High clock pulse width	tCH(abs)	0.43	0.57	0.43	0.57	0.43	0.57	0.43	0.57	tCK(avg)	
Absolute Low clock pulse width	tCL(abs)	0.43	0.57	0.43	0.57	0.43	0.57	0.43	0.57	tCK(avg)	
Clock period jitter	tJIT(per)	-280	280	-210	210	-170	170	-140	140	ps	
Maximum Clock Jitter between consecutive cycles	tJIT(cc)	-	560	-	420	-	340	-	280	ps	

Table 420 — Clock AC Timings for 467/533/600/688

Parameter	Symbol	467MHz		533MHz		600MHz		688MHz		Units	Notes
		Min	Max	Min	Max	Min	Max	Min	Max		
Average clock period	tCK(avg)	2.15	200	1.875	200	1.667	200	1.453	200	ns	
Average High pulse width	tCH(avg)	0.46	0.54	0.46	0.54	0.46	0.54	0.46	0.54	tCK(avg)	
Average Low pulse width	tCL(avg)	0.46	0.54	0.46	0.54	0.46	0.54	0.46	0.54	tCK(avg)	
Absolute clock period	tCK(abs)	tCK(avg) MIN + tJIT(per) MIN	-	tCK(avg) MIN + tJIT(per) MIN	-	tCK(avg) MIN + tJIT(per) MIN	-	tCK(avg) MIN + tJIT(per) MIN	-	ns	
Absolute High clock pulse width	tCH(abs)	0.43	0.57	0.43	0.57	0.43	0.57	0.43	0.57	tCK(avg)	
Absolute Low clock pulse width	tCL(abs)	0.43	0.57	0.43	0.57	0.43	0.57	0.43	0.57	tCK(avg)	
Clock period jitter	tJIT(per)	-120	120	-110	110	-95	95	-85	85	ps	
Maximum Clock Jitter between consecutive cycles	tJIT(cc)	-	240	-	220	-	190	-	170	ps	

Table 421 — Clock AC Timings for 750/800MHz

Parameter	Symbol	750MHz		800MHz		Units	Notes
		Min	Max	Min	Max		
Average clock period	tCK(avg)	1.333	200	1.25	200	ns	
Average High pulse width	tCH(avg)	0.46	0.54	0.46	0.54	tCK(avg)	
Average Low pulse width	tCL(avg)	0.46	0.54	0.46	0.54	tCK(avg)	
Absolute clock period	tCK(abs)	tCK(avg) MIN + tJIT(per) MIN	-	tCK(avg) MIN + tJIT(per) MIN	-	ns	
Absolute High clock pulse width	tCH(abs)	0.43	0.57	0.43	0.57	tCK(avg)	
Absolute Low clock pulse width	tCL(abs)	0.43	0.57	0.43	0.57	tCK(avg)	
Clock period jitter	tJIT(per)	-75	75	-70	70	ps	
Maximum Clock Jitter between consecutive cycles	tJIT(cc)	-	150	-	140	ps	

15.2 Write Clock Specification

The jitter specified is a random jitter meeting a Gaussian distribution. Input write clocks violating the min/max values may result in malfunction of the LPDDR5 device.

15.2.1 Definition for tWCK(avg) and nWCK

tWCK(avg) is calculated as the average write clock period across any consecutive 200 cycle window, where each write clock period is calculated from rising edge to rising edge.

$$tWCK(avg) = \left(\sum_{j=1}^{N} tWCKj \right) / N$$

$$where\ N = 200$$

Unit "tWCK(avg)" represents the actual write clock average tWCK(avg) of the input write clock under operation. Unit "nWCK" represents one write clock cycle of the input write clock, counting the actual write clock edges. tWCK(avg) may change by up to +/-1% within a 100 write clock cycle window, provided that all jitter and timing specs are met.

15.2.2 Definition for tWCK(abs)

tWCK(abs) is defined as the absolute write clock period, as measured from one rising edge to the next consecutive rising edge.
tWCK(abs) is not subject to production test.

15.2.3 Definition for tWCH(avg) and tWCL(avg)

tWCH(avg) is defined as the average high pulse width, as calculated across any consecutive 200 high pulses.

$$tWCH(avg) = \left(\sum_{j=1}^{N} tWCHj \right) / (N \times tWCK(avg))$$

$$where\ N = 200$$

tWCL(avg) is defined as the average low pulse width, as calculated across any consecutive 200 low pulses.

$$tWCL(avg) = \left(\sum_{j=1}^{N} tWCLj \right) / (N \times tWCK(avg))$$

$$where\ N = 200$$

15.2.4 Definition for tWCH(abs) and tWCL(abs)

tWCH(abs) is the absolute instantaneous write clock high pulse width, as measured from one rising edge to the following falling edge.

tWCL(abs) is the absolute instantaneous write clock low pulse width, as measured from one falling edge to the following rising edge.

Both tWCH(abs) and tWCL(abs) are not subject to production test.

15.2.5 Definition for tJIT(per)

tJIT(per) is the single period jitter defined as the largest deviation of any signal tWCK from tWCK(avg).

tJIT(per) = Min/max of {tWCKi - tWCK(avg) where i = 1 to 200}.

tJIT(per),act is the actual write clock jitter for a given system.

tJIT(per),allowed is the specified allowed write clock period jitter.

tJIT(per) is not subject to production test.

15.2.6 Definition for tJIT(cc)

tJIT(cc) is defined as the absolute difference in write clock period between two consecutive write clock cycles.

tJIT(cc) = Max of |{tWCK(i +1) - tWCK(i)}|.

tJIT(cc) defines the cycle to cycle jitter.

tJIT(cc) is not subject to production test.

15.2.7 Definition for tERR(2per)

tERR(2per) is defined as the cumulative error across 2 consecutive cycles from tWCK(avg).
tERR(2per) is not subject to production test.

$$tERR(nper) = \left(\sum_{j=1}^{i+n-1} tWCKj \right) - n \times tWCK(avg)$$

$$where\ N = 2$$

15.2.8 Definition for tERR(3per)

tERR(3per) is defined as the cumulative error across 3 consecutive cycles from tWCK(avg).
tERR(3per) is not subject to production test.

$$tERR(nper) = \left(\sum_{j=1}^{i+n-1} tWCKj \right) - n \times tWCK(avg)$$

$$where\ N = 3$$

15.2.9 Definition for tERR(4per)

tERR(4per) is defined as the cumulative error across 4 consecutive cycles from tWCK(avg). tERR(4per) is not subject to production test.

$$tERR(nper) = \left(\sum_{j=1}^{i+n-1} tWCKj \right) - n \times tWCK(avg)$$

$$where\ N = 4$$

15.2.10 Write Clock Timing

Table 422 — Write Clock AC Timings for 266/533/800/1067MHz

Parameter	Symbol	266MHz		533MHz		800MHz		1067MHz		Units	Notes
		Min	Max	Min	Max	Min	Max	Min	Max		
Write Clock Timing											
Average Write Clock period	tWCK(avg)	3.76	50	1.877	50	1.25	50	0.938	50	ns	
Average High pulse width	tWCKH(avg)	0.46	0.54	0.46	0.54	0.46	0.54	0.46	0.54	tWCK (avg)	
Average Low pulse width	tWCKL(avg)	0.46	0.54	0.46	0.54	0.46	0.54	0.46	0.54	tWCK (avg)	
Absolute Write Clock period	tWCK(abs)	tWCK (avg) MIN + tJIT(per) MIN	-	tWCK (avg) MIN + tJIT(per) MIN	-	tWCK (avg) MIN + tJIT(per) MIN	-	tWCK (avg) MIN + tJIT(per) MIN	-	ns	
Absolute High Write Clock pulse width	tWCKH(abs)	0.43	0.57	0.43	0.57	0.43	0.57	0.43	0.57	tWCK (avg)	
Absolute Low Write Clock pulse width	tWCKL(abs)	0.43	0.57	0.43	0.57	0.43	0.57	0.43	0.57	tWCK (avg)	
Write Clock period jitter tJIT(per)	WCK period jitter tJIT(per)	-190	190	-95	95	-70	70	-56	56	ps	
Maximum Write Clock Jitter between consecutive cycles	tJIT(cc)	-	380	-	190	-	140	-	112	ps	
Cumulative error across 2 cycles	tERR(2per)	TBD	TBD	TBD	TBD	TBD	TBD	TBD	TBD	ps	
Cumulative error across 3 cycles	tERR(3per)	TBD	TBD	TBD	TBD	TBD	TBD	TBD	TBD	ps	
Cumulative error across 4 cycles	tERR(4per)	TBD	TBD	TBD	TBD	TBD	TBD	TBD	TBD	ps	

15.2.10 Write Clock Timing (Cont'd)

Table 423 — Write Clock AC Timings for 1375/1600/1867/2134MHz

Parameter	Symbol	1375MHz		1600MHz		1867MHz		2134MHz		Units	Notes
		Min	Max	Min	Max	Min	Max	Min	Max		
Write Clock Timing											
Average Write Clock period	tWCK(avg)	0.728	50	0.625	50	0.536	50	0.469	50	ns	
Average High pulse width	tWCKH(avg)	0.46	0.54	0.46	0.54	0.46	0.54	0.46	0.54	tWCK(avg)	
Average Low pulse width	tWCKL(avg)	0.46	0.54	0.46	0.54	0.46	0.54	0.46	0.54	tWCK(avg)	
Absolute Write Clock period	tWCK(abs)	tWCK(avg) MIN + tJIT(per) MIN	-	tWCK(avg) MIN + tJIT(per) MIN	-	tWCK(avg) MIN + tJIT(per) MIN	-	tWCK(avg) MIN + tJIT(per) MIN	-	ns	
Absolute High Write Clock pulse width	tWCKH(abs)	0.43	0.57	0.43	0.57	0.43	0.57	0.43	0.57	tWCK(avg)	
Absolute Low Write Clock pulse width	tWCKL(abs)	0.43	0.57	0.43	0.57	0.43	0.57	0.43	0.57	tWCK(avg)	
Write Clock period jitter tJIT(per)	WCK period jitter tJIT(per)	-46	46	-40	40	-34	34	-30	30	ps	
Maximum Write Clock Jitter between consecutive cycles	tJIT(cc)	-	92	-	80	-	68	-	60	ps	
Cumulative error across 2 cycles	tERR(2per)	TBD	TBD	TBD	TBD	TBD	TBD	TBD	TBD	ps	
Cumulative error across 3 cycles	tERR(3per)	TBD	TBD	TBD	TBD	TBD	TBD	TBD	TBD	ps	
Cumulative error across 4 cycles	tERR(4per)	TBD	TBD	TBD	TBD	TBD	TBD	TBD	TBD	ps	

Table 424 — Write Clock AC Timings for 2400/2750/3000/3200MHz

Parameter	Symbol	2400MHz		2750MHz		3000MHz		3200MHz		Units	Notes
		Min	Max	Min	Max	Min	Max	Min	Max		
Write Clock Timing											
Average Write Clock period	tWCK(avg)	0.417	50	0.364	50	0.334	50	0.313	50	ns	
Average High pulse width	tWCKH(avg)	0.46	0.54	0.46	0.54	0.46	0.54	0.46	0.54	tWCK(avg)	
Average Low pulse width	tWCKL(avg)	0.46	0.54	0.46	0.54	0.46	0.54	0.46	0.54	tWCK(avg)	
Absolute Write Clock period	tWCK(abs)	tWCK(avg) MIN + tJIT(per) MIN	-	tWCK(avg) MIN + tJIT(per) MIN	-	tWCK(avg) MIN + tJIT(per) MIN	-	tWCK(avg) MIN + tJIT(per) MIN	-	ns	
Absolute High Write Clock pulse width	tWCKH(abs)	0.43	0.57	0.43	0.57	0.43	0.57	0.43	0.57	tWCK(avg)	
Absolute Low Write Clock pulse width	tWCKL(abs)	0.43	0.57	0.43	0.57	0.43	0.57	0.43	0.57	tWCK(avg)	
Write Clock period jitter tJIT(per)	WCK period jitter tJIT(per)	-28	28	-26	26	-24	24	-22	22	ps	
Maximum Write Clock Jitter between consecutive cycles	tJIT(cc)	-	56	-	52	-	48	-	44	ps	
Cumulative error across 2 cycles	tERR(2per)	TBD	TBD	TBD	TBD	TBD	TBD	TBD	TBD	ps	
Cumulative error across 3 cycles	tERR(3per)	TBD	TBD	TBD	TBD	TBD	TBD	TBD	TBD	ps	
Cumulative error across 4 cycles	tERR(4per)	TBD	TBD	TBD	TBD	TBD	TBD	TBD	TBD	ps	

15.3 tWCK2DQ AC parameters

Table 425 - tWCK2DQ AC parameters

Parameter	Symbol	Target	Min/Max	Units
DQ to WCK input offset	tWCK2DQI_HF	300/700	Min/Max	ps
	tWCK2DQI_LF	300/TBD	Min/Max	ps
WCK to DQ input offset temperature variation (Write)	tWCK2DQI_temp_HF	0.6	Max	ps/°C
	tWCK2DQI_temp_LF	0.7	Max	ps/°C
WCK to DQ input offset voltage variation (Write)	tWCK2DQI_volt_HF	25	Max	ps/50mV
	tWCK2DQI_volt_LF	50	Max	ps/50mV
Absolute High clock pulse width	tCH(abs)	43/57	Min/Max	tWCK(avg)
Absolute Low clock pulse width	tCL(abs)	43/57	Min/Max	tWCK(avg)
WCK to DQ output offset	tWCK2DQO_HF	650/1600	Min/Max	ps
	tWCK2DQO_LF	650/1900	Min/Max	ps
WCK to DQ output offset temperature variation (Read)	tWCK2DQO_temp_HF	1.5	Max	ps/°C
	tWCK2DQO_temp_LF	1.8	Max	ps/°C
WCK to DQ output offset voltage variation (Read)	tWCK2DQO_volt_HF	3.0	Max	ps/mV
	tWCK2DQO_volt_LF	5.0	Max	ps/mV

NOTE 1 HF means high frequency and LF means low frequency.
NOTE 2 '_LF' is used up to 3200Mbps and '_HF' is used over 3200Mbps.

Table 426 - WCK to CK/DQ offset rank to rank variation

Parameter	Symbol	Target	Min/Max	Units
WCK to CK offset rank to rank variation	tWCK2CK_rank2rank	0	Min	ps
		TBD	Max	ps
WCK to DQ Input offset rank to rank variation	tWCK2DQI_rank2rank	0	Min	ps
		TBD	Max	ps
WCK to DQ Output offset rank to rank variation	tWCK2DQO_rank2rank	0	Min	ps
		TBD	Max	ps

NOTE 1 The same voltage and temperature are applied to tWCK2CK_rank2rank, tWCK2DQI_rank2rank, tWCK2DQO_rank2rank AC parameters.
NOTE 2 tWCK2CK_rank2rank, tWCK2DQI_rank2rank and tWCK2DQO_rank2rank AC parameters are applied to multi-ranks per channel within a package consisting of the same design dies.
NOTE 3 tWCK2CK_rank2rank, tWCK2DQI_rank2rank and tWCK2DQO_rank2rank AC parameters are applied to multi byte mode dies per channel which share the same CK input within a package consisting of the same design dies.
NOTE 4 tWCK2CK_rank2rank, tWCK2DQI_rank2rank and tWCK2DQO_rank2rank AC parameters are applied to multi byte mode dies per channel which share the same CK input within a package consisting of the same design dies.
NOTE 5 tWCK2DQ parameter is defined for all DQ's within a byte.

15.4 DQ Tx Jitter Spec

The DRAM DQ to RDQS differential jitter is defined to support both SOC matched and unmatched DQ-RDQS input receiver (Rx) types over NUI of mismatch. All output timings are referenced to RDQS for source synchronous timing relationship. The appropriate RDQS preamble mode must be selected in order to support the unmatched SOC Rx. It is the responsibility of the SOC and system to insure the advanced RDQS preambles edges are robust for system operation.

The N-UI DQ to RDQS output timing is defined by tRDQS_NUI in conjunction with tQH and tDQSQ where NUI defines the number of UI RDQS is shifted from the corresponding DQ as shown in the figures below.

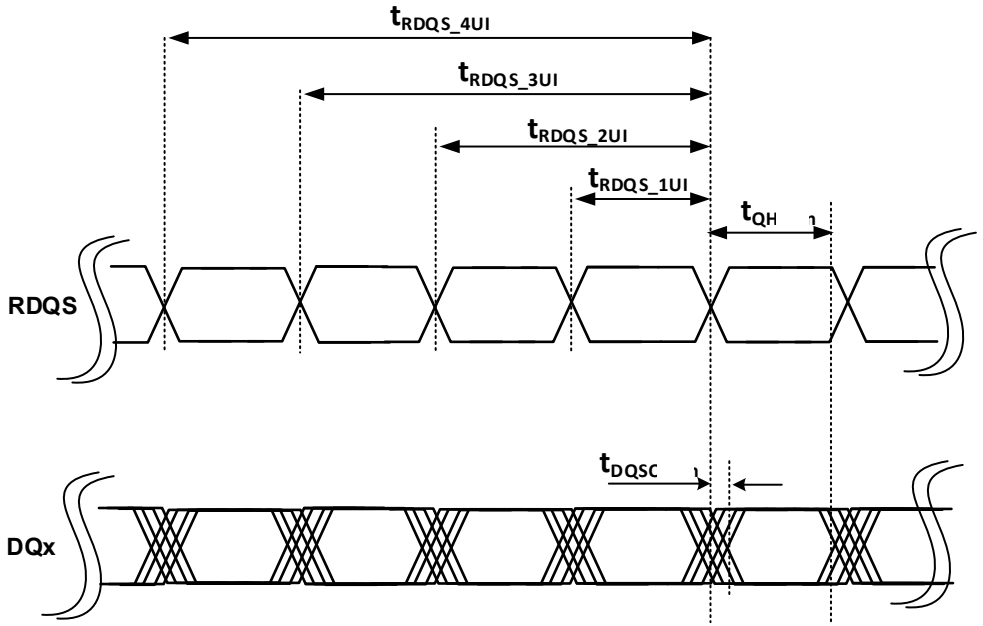

Figure 248 - N-UI DQ to RDQS output timing definitions

The effective eye width available at the DRAM per byte for an unmatched Rx will be tQH - tDQSQ - |tjitRDQS_NUI| where tjitRDQS_NUI = tRDQS_NUI - N*UI with N= 1,2,3,4 and UI is the unit interval.

The effective eye width available at the DRAM per pin will be tQW - |tjitRDQS_NUI| where tjitRDQS_NUI = tRDQS_NUI - N*UI with N= 1,2,3,4 and UI is the unit interval and tQW= tQH(pin)-tDQSQ(pin).

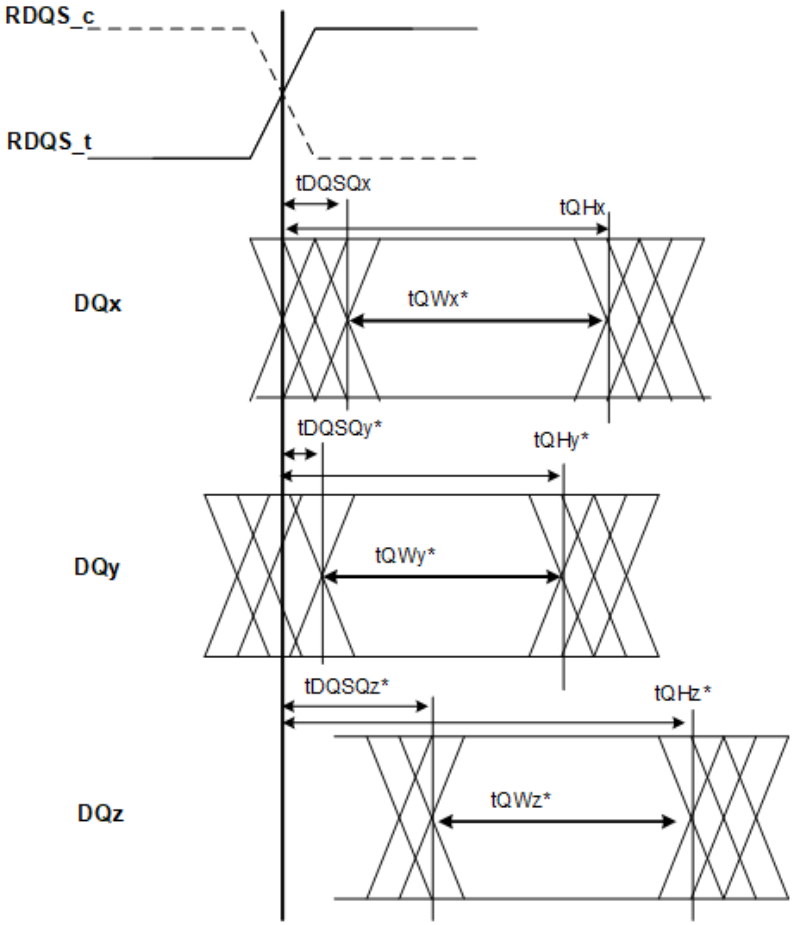

Figure 249 - tQW example of eyewidth per pin and relationship of tDQSQ(pin) and tQH(pin) across byte group

The figures below include examples of 0 and 3UI mismatch using the 4 twck RDQS read preamble of 2twck static + 2twck toggle.

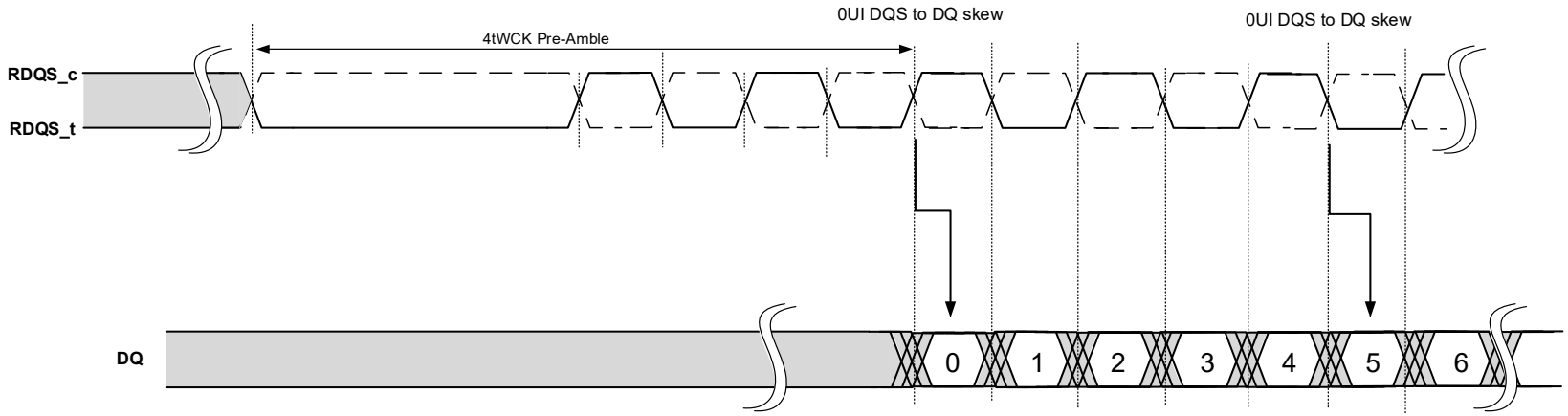

NOTE 1 It is the responsibility of the SOC and system to insure the advanced RDQS preambles edges are robust for system operation.

Figure 250 - Read burst example for pin DQx depicting bits 0 and 5 relative to the RDQS edge for 0 UI mismatch

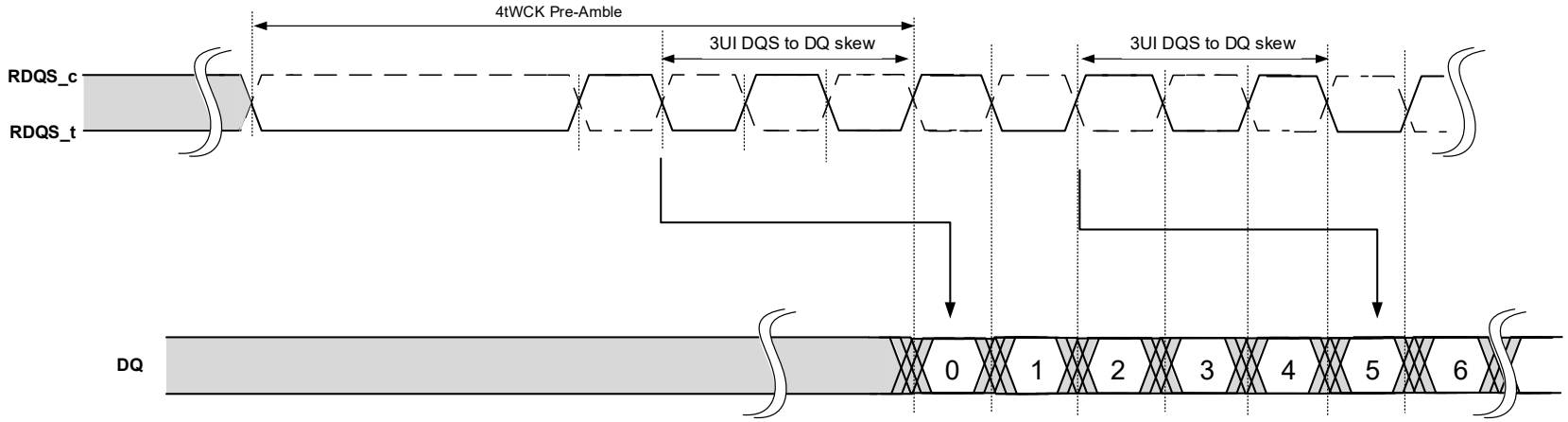

NOTE 1 It is the responsibility of the SOC and system to insure the advanced RDQS preambles edges are robust for system operation.

Figure 251 - Read burst example for pin DQx depicting bits 0 and 5 relative to the RDQS edge for 3UI mismatch

Table 427 - DRAM DQ, DQS output timing

Symbol	Parameter	Data Rate				Units	Notes
		<3200		3200/5500/6400			
		Min	Max	Min	Max		
t_{DQSQ}	RDQS_t,RDQS_c to DQ Skew per byte group	-	tbd	-	0.26	UI	1,2,3,4,9,10
t_{QH}	RDQS_t,RDQS_c to DQ output hold time per byte group	tbd	-	0.76	-	UI	1,2,3,4,9,10
t_{QW}	DQ eyewidth per pin	tbd	-	tWCKH/L(abs)MIN – 0.15	-	UI	1,2,4,5,6,9,10
$t_{jitRDQS_1UI}$	1UI jitter of RDQS	tbd	tbd	-0.015	0.015	UI	1,2,7,8,9,10
$t_{jitRDQS_2UI}$	2UI jitter of RDQS	tbd	tbd	-0.025	0.025	UI	1,2,7,8,9,10
$t_{jitRDQS_3UI}$	3UI jitter of RDQS	tbd	tbd	-0.030	0.030	UI	1,2,7,8,9,10
$t_{jitRDQS_4UI}$	4UI jitter of RDQS	tbd	tbd	-0.035	0.035	UI	1,2,7,8,9,10

NOTE 1 These parameters are defined over voltage and temperature.
NOTE 2 This parameter value is defined after duty cycle adjustment is applied.
NOTE 3 These parameters are a function of WCK input clock jitter tWCKH and tWCKL. Note for tWCKL(abs)MIN of 0.43tck = 0.86 UI.
NOTE 4 These parameters are defined as min/max across all DQ pins per byte group. This includes the across pin variation within a byte group.
NOTE 5 These parameters are defined per DQ pin where tQW= tQH(pin)-tDQSQ(pin) for the eye width.
NOTE 6 If tWCKL(abs) MIN or tWCKH(abs) MIN is 0.45tWCK then tQW MIN = tWCKH/L(abs) MIN - 0.13 UI.
NOTE 7 This parameter is defined as tjitRDQS_NUI = tRDQS_NUI - N*UI where N= 1,2,3,4 and UI is the unit interval. Example tjitRDQS_2UI= tRDQS_2UI - 2*UI.
NOTE 8 These parameters are a function of VDD2H Zmax. When VDD2H Zmax is below 10 mohms from 2-10MHz and 20 mohms at 20MHz the min and max spec values will reduce by 0.005UI.
a: Example for 2UI Jitter of RDQS : tjitRDQS_2UI(MIN) = -0.020 and tjitRDQS_2UI(MAX) = 0.020
NOTE 9 When operating in WCK low frequency mode (MR18 OP[3]=0B), <3200 data rate timing parameters are applied.
NOTE 10 When operating in WCK high frequency mode (MR18 OP[3]=1B), 3200/5500/6400 data rate timing parameters are applied.

15.5 CS Rx specification

LPDDR5 CS Rx is defined as two modes Asynchronous mode and Synchronous mode. Asynchronous mode Rx spec applies to during power down / deep sleep mode and exit from power down / deep sleep mode. Synchronous mode applies to other period than exit mode.

15.5.1 CS Rx mask and single pulse definition for Synchronous mode

LPDDR5 CS Rx mask for Synchronous mode is defined as hexagonal mask shape as shown in Figure 252. CS signals apply the same compliance mask and operate in single data rate mode. The receiver mask (Rx Mask) defines the area that the input signal must not encroach in order for the DRAM input receiver to be expected to be able to successfully capture a valid input signal.

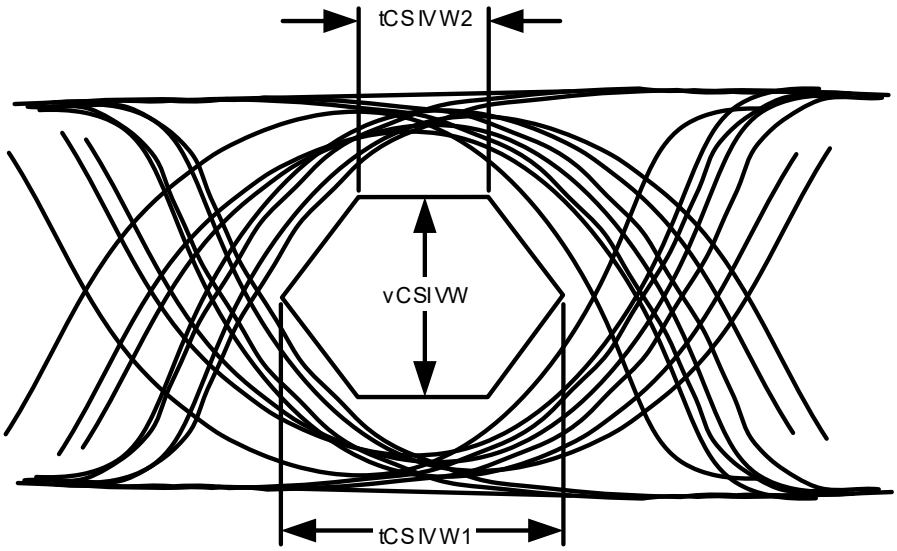

Figure 252 Synchronous mode CS Rx Mask definition

LPDDR5 CS Rx single pulse definition as shown in Figure 253.

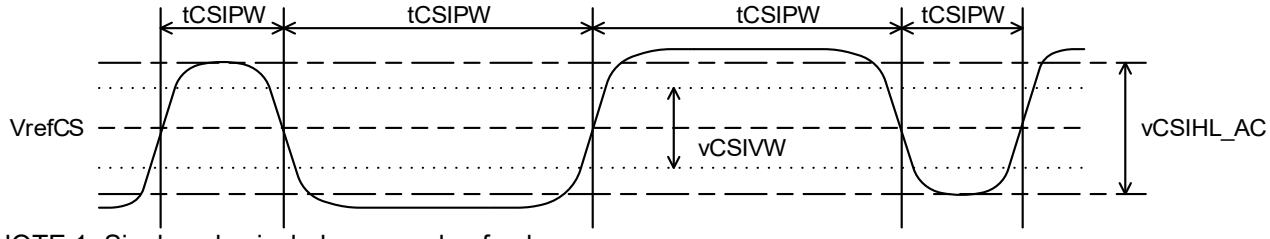

NOTE 1 Single pulse include any cycle of pulse

Figure 253 Synchronous mode CS Rx single pulse definition

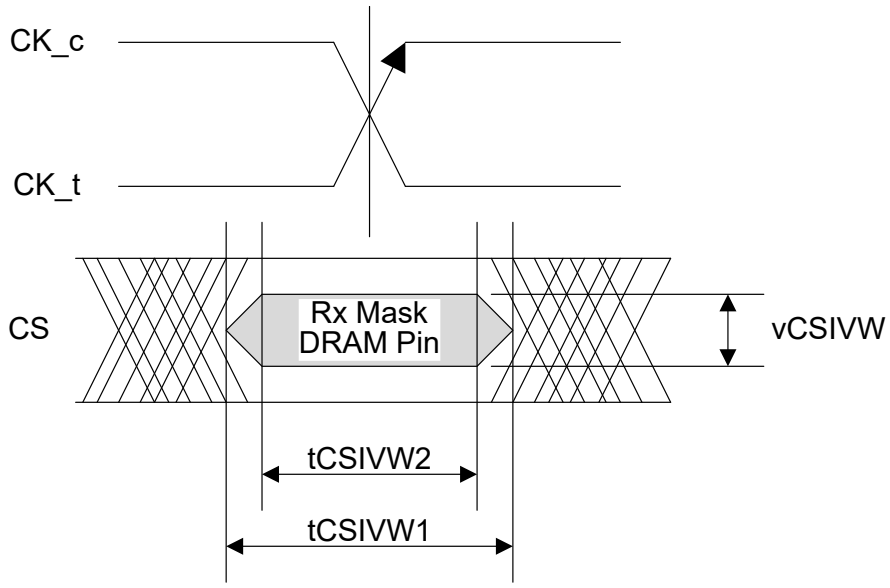

Figure 254 Synchronous mode CS Timings at the DRAM Pin

Timing terms in Figure 255 are measured from CK_t/CK_c (differential mode) / CK (single end mode) to the center (midpoint) of the tCSIVW1 and tCSIVW2 window taken at midpoint and vCSIVW voltage levels.

15.5.2 CS Rx input level definition for Asynchronous mode

LPDDR5 CS Rx spec for power down mode is defined as shown in Figure 255. CS has to be lower than ViLPD to stay in power down mode or deep sleep mode. To exit from power down or deep sleep mode, CS has to satisfy ViHPD and power down / deep sleep timing specifications.

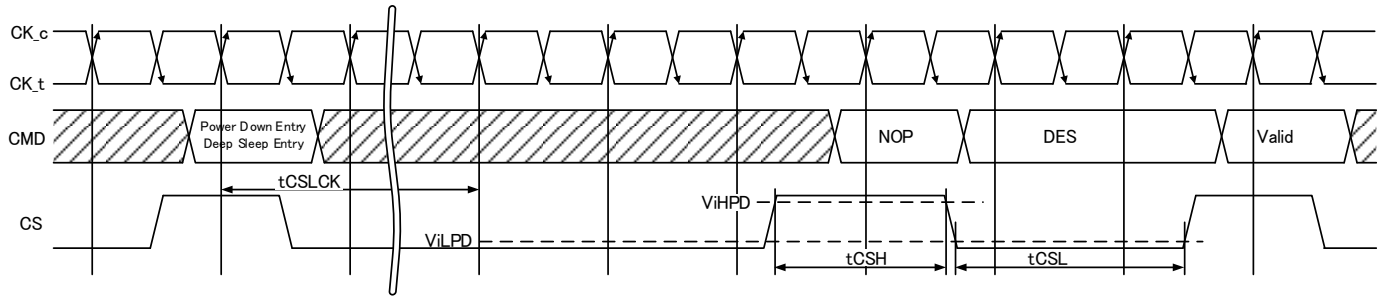

Figure 255 Asynchronous mode ViHPD and ViLPD at Power Down Exit

15.5.3 Synchronous mode CS Rx mask / single pulse spec and Asynchronous mode CS input spec.

Table 428 CS Rx Specification

item	Symbol	Min/ Max	CK Frequency (MHz)											Unit	Note
			67[A]	133	200	267	344	400	467	533	600	688	750	800	
Rx Mask															
CS Rx mask width at VrefCS	tCSIVW1	Min	0.3											UI	1
CS Rx mask width at vCSIVW	tCSIVW2	Min	0.22											UI	1
CS Rx mask height	vCSIVW	Min	180											mV	2
Rx Single pulse															
CS Rx pulse width	tCSIPW	Min	0.6											UI	
CS Rx pulse amplitude	vCSIHL_AC	Min	240											mV	3
CS reference voltage	Vref_CS		VDD2H/3											mV	
Power down															
CS VIL during Power down / Deep Sleep	ViLPD	Max	130											mV	4
CS VIH during Power down / Deep Sleep	ViHPD	Min	550											mV	5
		Max	VDD2H + 0.2											V	5

NOTE A The Rx voltage and absolute timing requirements apply for all CS operating frequencies at or below 67 for all speed bins. For example, tCSIVW1 (ns) = 4.477ns at or below 67MHz CK frequencies.

NOTE 1 CS Rx mask voltage and timing parameters at the pin including temperature drift and voltage AC noise impact based on Z(f) specification at a fixed temperature on the package. The voltage supply noise must comply to the component Min-Max DC operating conditions.

NOTE 2 CS single pulse signal amplitude into the receiver has to meet or exceed vCSIHL AC at any point over the total UI. No timing requirement above level. vCSIIHL_AC is the peak to peak voltage centered around VrefCS such that vCSIHL_AC/2 min has to be met both above and below VrefCS.

NOTE 3 vCSIHL_AC does not have to be met when no transitions are occurring.

NOTE 4 The input voltage presented to the CS Rx pin during power down should be 0V nominally to minimize leakage current.

NOTE 5 ViHPD is applied only for Power Down and Deep Sleep exit.

15.6 CA Rx specification

15.6.1 CA Rx mask and single pulse definition

LPDDR5 CA Rx mask is defined as hexagonal mask shape as shown in Figure 256. All CA signals apply the same compliance mask and operate in double data rate mode.
The receiver mask (Rx Mask) defines the area that the input signal must not encroach in order for the DRAM input receiver to be expected to be able to successfully capture a valid input signal.

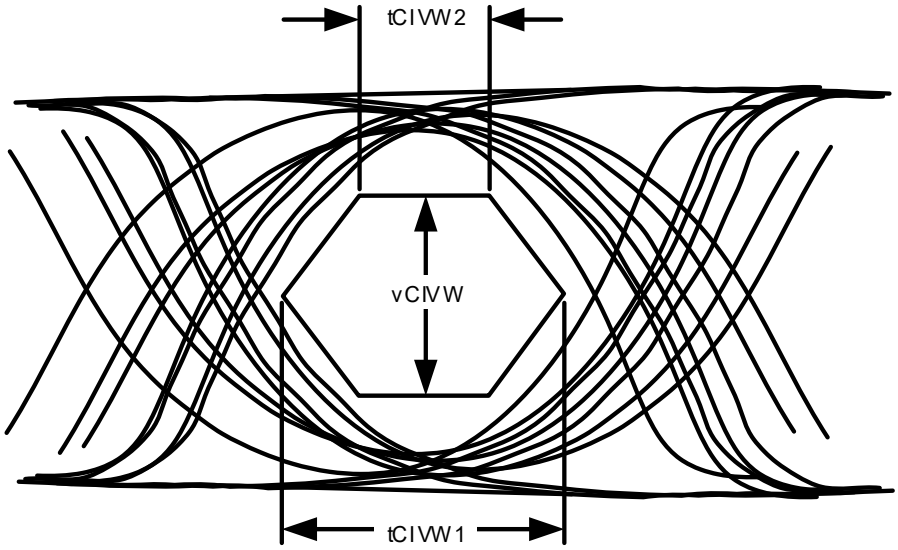

Figure 256 CA Rx Mask definition

LPDDR5 CA Rx single pulse definition as shown in Figure 257

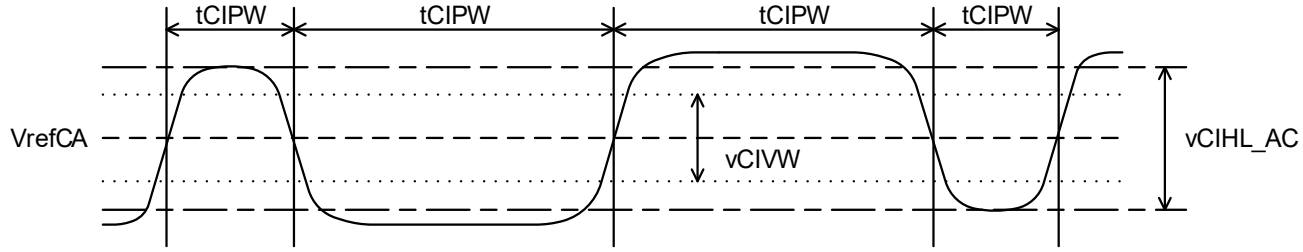

NOTE 1 Single pulse include any cycle of pulse.
NOTE 2 VrefCA is calculated value based on VDDQ and MR12.

Figure 257 CA Rx single pulse definition

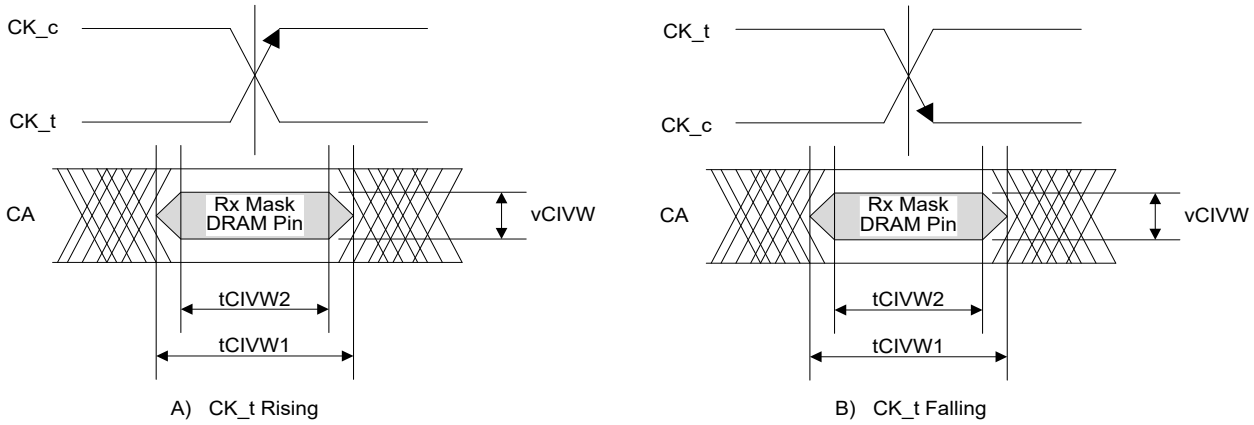

Figure 258 CA timings at the DRAM Pins

Minimum CA Eye should be VrefCA aligned.
Differential CK mode definition.
All of the timing terms in Figure 258 are measured from CK_t/CK_c (differential mode) / CK (single ended mode) to the center (midpoint) of the tCIVW1 and tCIVW2 window taken at the midpoint and vCIVW voltage level. CA Rx mask window center is around CK_t/CK_c cross point (differential mode) / CK (single ended mode).
Single Ended CK mode definition
TBD

15.6.2 CA Rx mask and single pulse specification

Table 429 CA Rx Specification

Item	Symbol	Min/ Max	CK Frequency (MHz)											Unit	Note
			67[A]	133	200	266	344	400	467	533	600	688	750	800	
Rx Mask															
CA Rx mask width at TBD	tCIVW1	Min	0.3											UI	1,2
CA Rx mask width at vCIVW	tCIVW2	Min	0.18											UI	1,2
CA Rx mask height	vCIVW	Min	155											mV	3
Rx Single pulse															
CA Rx pulse width	tCIPW	Min	0.6											UI	4
CA Rx pulse amplitude	vCIHL_AC	Min	190											mV	5
CA Vref															
CA Vref	VrefCA	Max	350											mV	
		Min	75											mV	
CA mask offset															
CA to CA offset	tCA2CA	Max	100											ps	6
CA to CA offset shared CA	tCA2CA_ share	Max	150											ps	7

NOTE 1 CA Rx mask voltage and timing parameters at the pin including temperature drift and voltage AC noise impact based on Z(f) specification at a fixed temperature on the package. The voltage supply noise has to comply to the component Min-Max DC operating conditions.

NOTE 2 Rx mask voltage vCIVWl(max) has to be centered around VrefCA.

NOTE 3 CA single input pulse signal amplitude into the receiver has to meet or exceed vCIHL AC at any point over the total UI. No timing requirement above level. vCIIHL AC is the peak to peak voltage centered around VrefCA such that vCIHL_AC/2 min has to be met both above and below VrefCA.

NOTE 4 CA only minimum input pulse width defined at the VrefCA.

NOTE 5 vCIHL_AC does not have to be met when no transitions are occurring.

NOTE 6 tCA2CA is defined fastest CA[x] mask center to slowest CA[y] mask center.

NOTE 7 CA to CA offset parameter (tCA2CA_share) is defined between dies which are in the same PKG and share same power supplies.

NOTE A The Rx voltage and absolute timing requirements apply for all CA operating frequencies at or below 67 for all speed bins. For example tCIVW1 (ns) = 2.239ns at or below 67MHz CK frequencies.

15.6.3 tCA2CA_share definition

tCA2CA_share = max(CA2CA_share_R, CA2CA_share_F)

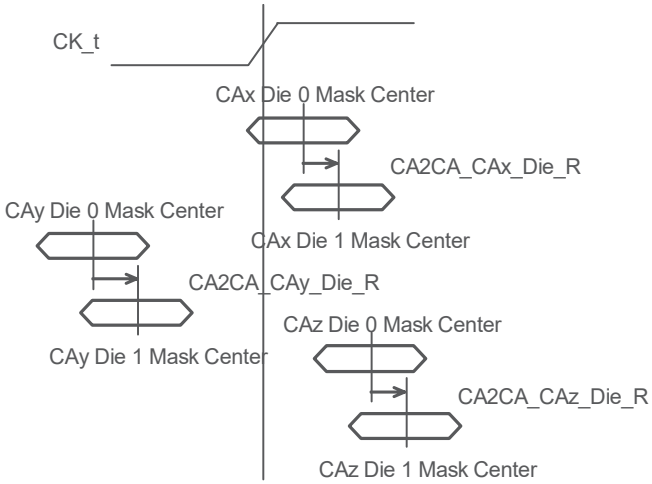

Figure 259 - CK_t Rising Edge CA mask

Definition of CA2CA_share_R

CA2CA_share_R = max(CA2CA_CAi_Die_R) if min(CA2CA_CAi_Die_R) ≥ 0

|max(CA2CA_CAi_Die_R)–min(CA2CA_CAi_Die_R)| if max(CA2CA_CAi_Die_R) ≥ 0 and min(CA2CA_CAi_Die_R) < 0

|min(CA2CA_CAi_Die_R)| if max(CA2CA_CAi_Die_R) < 0

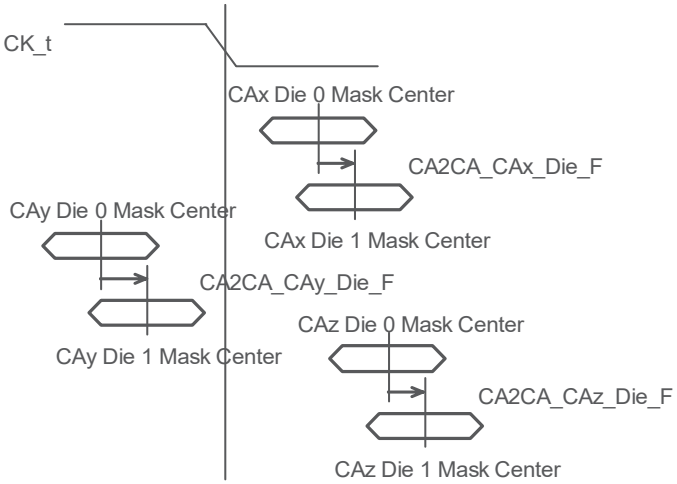

Figure 260 - CK_t Falling Edge CA mask

Definition of CA2CA_share_F

CA2CA_share_F = max(CA2CA_CAi_Die_F) if min(CA2CA_CAi_Die_F) ≥ 0

|max(CA2CA_CAi_Die_F)–min(CA2CA_CAi_Die_F)| if max(CA2CA_CAi_Die_F) ≥ 0 and min(CA2CA_CAi_Die_F) < 0

|min(CA2CA_CAi_Die_F)| if max(CA2CA_CAi_Die_F) < 0

15.7 DQ, DMI, Parity and DBI Rx specification

15.7.1 DQ, DMI, Parity and DBI Rx mask and single pulse definition

LPDDR5 DQ, DMI, Parity and DBI Rx mask is defined as hexagonal mask as shown in Figure 1. The mask (vDIVW, tDIVW1, tDIVW2) defines the area the input signal must not encroach in order for the DQ input receiver to successfully capture an input signal.

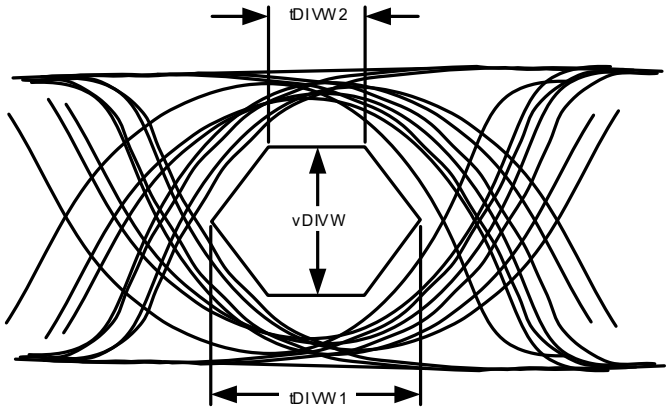

Figure 261 - DQ, DMI, Parity and DBI Rx Mask definition

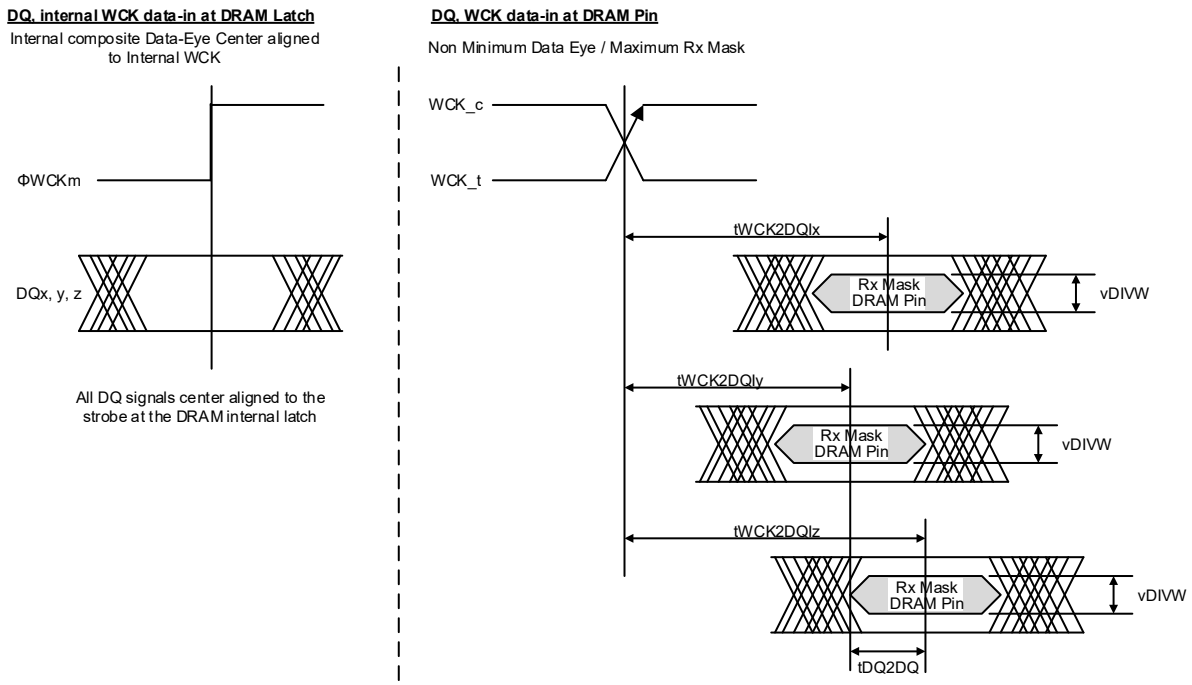

NOTE 1 tWCK2DQI is measured at the center (midpoint) of the tDIVW window.
NOTE 2 DQz represents the max tWCK2DQI in this example
NOTE 3 DQy represents the min tWCK2DQI in this example

Figure 262 - DQ to WCK tWCK2DQI and tDQ2DQ Timings at the DRAM pins referenced from the internal latch

LPDDR5 DQ, DMI, Parity and DBI Rx single pulse definition as shown in Figure 263.

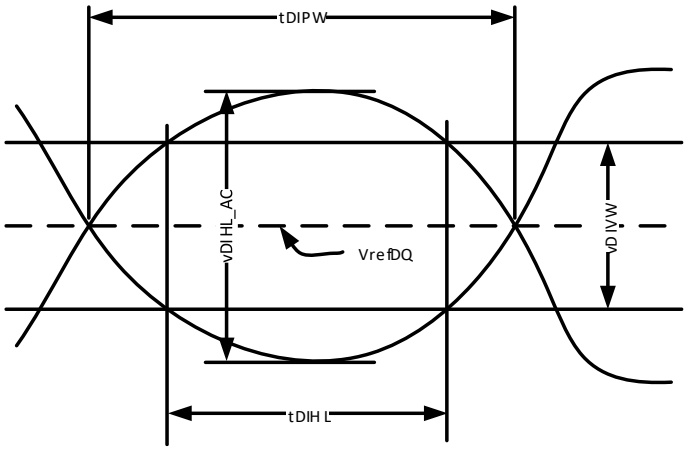

NOTE 1 Single pulse include any cycle of pulse
NOTE 2 Vref DQ is caluculated value based on VDDQ and MR14/MR15

Figure 263 - DQ, DMI, Parity and DBI Rx single pulse definition

Table 430 - DQ, DMI, Parity and DBI Rx Specification

item	Symbol	Min/ Max	WCK Frequency (MHz)											Unit	Note
			266[A]	533	800	1067	1375	1600	1867	2134	2400	2750	3000	3200	
Rx Mask															
DQ Rx mask width at TBD	tDIVW1	Min	0.35											UI	1
DQ Rx mask width at vDIVW	tDIVW2	Min	0.18											UI	1
DQ Rx mask height	vDIVW	Min	140			120				100				mV	1,2
Rx Single pulse															
DQ Rx pulse width	tDIPW	Min	0.45											UI	4
DQ Rx pulse width above/below vDIVW	tDIHL	Min	0.25											UI	4
DQ Rx pulse amplitude	vDIHL_AC	Min	140											mV	3
DQ Vref															
DQ Vref	VrefDQ	Max	350							225				mV	
		Min	75											mV	

NOTE A The Rx voltage and absolute timing requirements apply for all DQ operating frequencies at or below 266MHz for all speed bins. For example tDIVW1 (ns) = 656.7ps at or below 266MHz WCK frequencies.

NOTE 1 Data Rx mask voltage and timing parameters are applied per pin and includes the DRAM DQ to WCK voltage AC noise impact based on Z(f) specification at a fixed temperature on the package. The voltage supply noise must comply to the component Min-Max DC operating conditions.

NOTE 2 Rx mask voltage vDIVW has to be centered around VrefDQ.

NOTE 3 DQ single input pulse amplitude into the receiver has to meet or exceed vDIHL_AC at any point over the total UI.
No timing requirement above level. vDIHL AC is the peak to peak voltage centered around VrefDQ such that vDIHL_AC/2 min has to be met both above and below VrefDQ.

NOTE 4 DQ only minimum input pulse width defined at the VrefDQ.

15.8 Pull Up/Pull Down Driver Characteristics and Calibration

All output pins (DQ, DMI, RDQS_t and RDQS_c) driver characteristics and calibration are defined following.

Table 431 — Pull-down Driver Characteristics, with ZQ Calibration

R_{ONPD},nom	Resistor	Min	Nom	Max	Unit
40 Ohm	R_{ON40PD}	0.9	1	1.1	RZQ/6
48 Ohm	R_{ON48PD}	0.9	1	1.1	RZQ/5
60 Ohm	R_{ON60PD}	0.9	1	1.1	RZQ/4
80 Ohm	R_{ON80PD}	0.9	1	1.1	RZQ/3
120 Ohm	$R_{ON120PD}$	0.9	1	1.1	RZQ/2
240 Ohm	$R_{ON240PD}$	0.9	1	1.1	RZQ/1

NOTE 1 All value are after ZQ Calibration, see Table 433. Without ZQ Calibration R_{ONPD} values are ± 30%.
NOTE 2 R_{ONPD} limits are defined at same voltage and temperature as at the time ZQ calibration was done.

Table 432 — Pull-Up Characteristics, with ZQ Calibration

VOH_{PU},nom	VOH,nom(mV)	Min	Nom	Max	Unit
V_{DDQ}*0.5	250	0.9	1	1.1	VOH,nom

NOTE 1 All values are after ZQ Calibration. Without ZQ Calibration VOH(nom) values are ± 30%.
NOTE 2 VOH,nom (mV) values are based on a nominal VDDQ = 0.5V, VDD2H=1.05V.
NOTE 3 VOH_{PU} limits are defined at same voltage and temperature as at the time ZQ calibration was done.
NOTE 4 VOH_{PU} limits are defined for load termination matching the SOC ODT setting (in MR17 OP[2:0]) selected at the time ZQ calibration was done. If the selected SOC ODT setting MR17 OP[2:0]=000_B, then the VOH_{PU} limits are not defined.
NOTE 5 VOH_{PU} limits are defined as DC levels when all DQ drivers are driving high.
NOTE 6 Assumption of SOC ODT is typical for VOH_{PU},nom definition.

Table 433 — Valid Calibration Points

VOH_{PU},nom	ODT Value					
	240	120	80	60	48	40
V_{DDQ}*0.5	VALID	VALID	VALID	VALID	VALID	VALID

NOTE 1 Once the output is calibrated for a given VOH(nom) calibration point, the ODT value may be changed without recalibration.

Table 434 — Un-terminated Pull Up Characteristics

R_{ONUNPU},nom	Resistor	Min	Nom	Max	Unit
40 Ohm	$R_{ON40UNPU}$	0.7	1	1.3	RZQ/6
48 Ohm	$R_{ON48UNPU}$	0.7	1	1.3	RZQ/5
60 Ohm	$R_{ON60UNPU}$	0.7	1	1.3	RZQ/4
80 Ohm	$R_{ON80UNPU}$	0.7	1	1.3	RZQ/3
120 Ohm	$R_{ON120UNPU}$	0.7	1	1.3	RZQ/2
240 Ohm	$R_{ON240UNPU}$	0.7	1	1.3	RZQ/1

NOTE R_{ONUNPU} is defined at VOH = VDDQ/2.

15.9 Output Driver and Termination Resistance Temperature and Voltage Sensitivity

If temperature and/or voltage change after calibration, the tolerance limits widen according to the Tables shown below.

Table 435 Worst Case Output Driver and Termination Resistance

Resistor	Definition Point	Min	Max	Unit	Notes
R_{ONPD}	0.5 x VDDQ	RonPD(nom) x(0.90-($dR_{on}dT(max) \times \|\Delta T\|$) -($dR_{on}(max)dV2 \times \|\Delta V2\|$) -($dR_{on}(max)dVQ \times \|\Delta VQ\|$))	RonPD(nom)x(1.10+($dR_{on}(max)dT \times \|\Delta T\|$) +($dR_{on}(max)dV2 \times \|\Delta V2\|$) +($dR_{on}(max)dVQ \times \|\Delta VQ\|$))	ohm	1,2,3
R_{TT}	0.5 x VDDQ	R_{TT} (nom) x(0.90-($dR_{on}(max)dT \times \|\Delta T\|$) -($dR_{on}(max)dV2 \times \|\Delta V2\|$) -($dR_{on}(max)dVQ \times \|\Delta VQ\|$))	R_{TT} (nom) x(1.10+($dR_{on}(max)dT \times \|\Delta T\|$) +($dR_{on}(max)dV2 \times \|\Delta V2\|$) +($dR_{on}(max)dVQ \times \|\Delta VQ\|$))	ohm	1,2,3
R_{ONUNPU}	0.5 x VDDQ	RonUNPU (nom) x(0.70-($dR_{on}UNdT(max) \times \|\Delta T\|$) -($dR_{on}(max)$ UNdV2 $\times \|\Delta V2\|$) -($dR_{on}(max)$ UNdVQ $\times \|\Delta VQ\|$))	RonUNPU (nom)x(1.30+($dR_{on}(max)$ UNdT $\times \|\Delta T\|$) +($dR_{on}(max)$ UNdV2 $\times \|\Delta V2\|$) +($dR_{on}(max)$ UNdVQ $\times \|\Delta VQ\|$))	ohm	2,3
$R_{TT}CS$	0.5 x VDDQ	$R_{TT}CS$ (nom) x(0.90-($dR_{on}(max)dT \times \|\Delta T\|$) -($dR_{on}(max)dV2 \times \|\Delta V2\|$) -($dR_{on}(max)dVQ \times \|\Delta V2\|$))	R_{TT} CS (nom) x(1.10+($dR_{on}(max)dT \times \|\Delta T\|$) +($dR_{on}(max)dV2 \times \|\Delta V2\|$) +($dR_{on}(max)dVQ \times \|\Delta V2\|$))	ohm	1,2,3

NOTE 1 ΔT = T - T(@ Calibration), ΔV2 = VDD2H – VDD2H(@ Calibration), ΔVQ = VDDQ – VDDQ(@ Calibration)

NOTE 2 $dR_{ON}dT$, $dR_{ON}dV2$, $dR_{ON}dVQ$, $dR_{TT}dV2$, $dR_{TT}dVQ$, $dR_{TT}dT$, $dR_{ON}UNdT$, $dR_{ON}UNdV2$ and $dR_{ON}UNdVQ$, are not subject to production test but are verified by design and characterization.

NOTE 3 VDD1, VDD2H, VDD2HQ and VDDQ must be nominal during measurement.

Table 436 Worst Case Output high voltage

Voltage	Min	Max	Unit	Notes
VOH_{PU}	VOH_{PU} (nom) x(0.90-(dVOH(max)dT x |ΔT|)- (dVOH(max)dV2 x|ΔV2|)- (dVOH(max)dVQ x|ΔVQ|))	VOH_{PU} (nom) x(1.10+(dVOH(max)dT x |ΔT|)+ (dVOH(max)dV2 x|ΔV2|)+ (dVOH(max)dVQ x|ΔVQ|))	V	1,2,3,4

NOTE 1 ΔT = T - T(@ Calibration), ΔV2 = VDD2H – VDD2H(@ Calibration), ΔVQ = VDDQ – VDDQ(@ Calibration)

NOTE 2 dVOHdT, dVOHdV2 and dVOHdVQ are not subject to production test but are verified by design and characterization.

NOTE 3 Refer to Section 15.8 Pull Up/Pull Down Driver Characteristics for VOHPU.

NOTE 4 VDD1, VDD2H, VDD2HQ and VDDQ must be nominal during measurement.

Table 437 Output Driver and Termination Resistance Temperature and Voltage Sensitivity

Symbol	Parameter	Min	Max	Unit
$dR_{ON}dT$	R_{ON} Temperature Sensitivity	0.00	0.75	%/°C
$dR_{ON}dV2$	R_{ON} VDD2H Voltage Sensitivity	0.00	0.50	%/mV
$dR_{ON}dVQ$	R_{ON} VDDQ Voltage Sensitivity	0.00	0.20	%/mV
dVOHdT	VOH Temperature Sensitivity	0.00	0.75	%/°C
dVOHdV2	VOH VDD2H Voltage Sensitivity	0.00	0.35	%/mV
dVOHdVQ	VOH VDDQ Voltage Sensitivity	0.00	0.35	%/mV
$dR_{TT}dT$	R_{TT} Temperature Sensitivity	0.00	0.75	%/°C
$dR_{TT}dV2$	R_{TT} VDD2H Voltage Sensitivity	0.00	0.50	%/mV
$dR_{TT}dVQ$	R_{TT} VDDQ Voltage Sensitivity	0.00	0.20	%/mV
dRONUNdT	Un-terminated RON Temperature Sensitivity	0.00	0.75	%/°C
dRONUNdV2	Un-terminated RON VDD2H Voltage Sensitivity	0.00	0.75	%/mV
dRONUNdVQ	Un-terminated RON VDDQ Voltage Sensitivity	0.00	0.75	%/mV

16 Die configuration, Package ballout & Pin Definition

16.1 Package Configuration

16.1.1 Package Considerations for Byte-Mode Devices

Two Byte-Mode LPDDR5 SDRAMs can be logically combined into a Standard LPDDR5 SDRAM. Byte mode devices use the same bank architecture with one row address added and the page size reduced by half compared to a standard device of the same density. Two byte-mode die of the same density can be combined to make an equivalent x16 device of twice the given density. The inputs are ganged and the DQ busses from the two devices are assigned individually to the 16-bit channels.

Packages for Standard and Byte-Mode devices share the same ballmaps. This section describes internal wiring changes and system considerations when using packages containing Byte-Mode devices.

Three different die combinations are supported:

1) Standard - Packages configured with only Standard LPDDR5 die.
2) Byte-Mode - Packages configured with only Byte-Mode LPDDR5 die.
3) Mixed - Packages configured with both Standard and Byte-Mode LPDDR5 die. In this mixed configuration, some ranks contain only Standard die and other ranks contain only Byte-Mode die.

For mixed packages, standard devices shall be assigned to the lower numbered ranks and byte-mode devices shall be assigned to the higher numbered ranks.

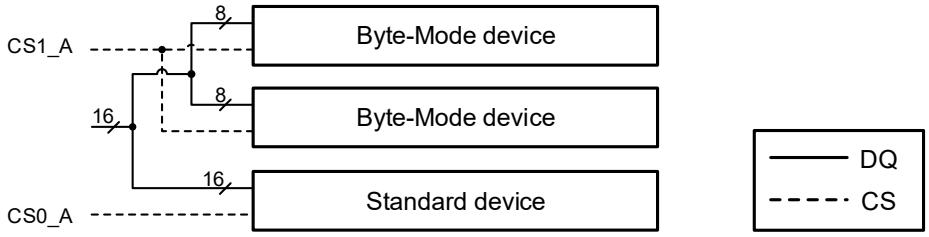

Figure 264 — Example of rank assignment for a single-channel dual-rank package

Packaged devices support only one set of latency parameters depending on the die combination:

1) Standard packages – configured with only Standard LPDDR5 dies – support standard LPDDR5 latency parameters.
2) Byte-Mode packages – configured with only Byte-Mode LPDDR5 dies – support byte-mode latency parameters.
3) Mixed packages – configured with both Standard and Byte-Mode LPDDR5 dies – support byte-mode latency parameters

MR0 OP[1] for each die indicates the appropriate timing support.

16.2 Pad Order

Table 438 — LPDDR5 Pad order

TOP					
Pad number	Pad Name	Pad number	Pad Name	Pad number	Pad Name
1	VDD2H	36	VDD2H	60	VSS
2	VSS	37	RESET_n	61	DQ7
3	VDD1	38	VDD2L	62	VDDQ
4	VDD2H	39	VSS	63	DQ6
5	VDD2L	40	CA6	64	VSS
6	VSS	41	CA5	65	DQ5
7	VDD2H	42	VDD2H	66	VDDQ
8	VSS	43	CA4	67	DQ4
9	DQ8	44	CA3	68	VSS
10	VDDQ	45	VSS	69	DMI0
11	DQ9	46	CK_c	70	VDDQ
12	VSS	47	CK_t	71	VDD2L
13	DQ10	48	VDD2H	72	VSS
14	VDDQ	49	CS	73	WCK0_t
15	DQ11	50	CA2	74	WCK0_c
16	VSS	51	VSS	75	VDD2H
17	RDQS1_t	52	CA1	76	VDDQ
18	RDQS1_c	53	CA0	77	RDQS0_c
19	VDDQ	54	VDD2H	78	RDQS0_t
20	VDD2H	55	VDD2L	79	VSS
21	WCK1_c	56	VSS	80	DQ3
22	WCK1_t	57	ZQ	81	VDDQ
23	VSS	58	VDDQ	82	DQ2
24	VDD2L	59	VDD2H	83	VSS
25	VDDQ			84	DQ1
26	DMI1			85	VDDQ
27	VSS			86	DQ0
28	DQ12			87	VSS
29	VDDQ			88	VDD2H
30	DQ13			89	VSS
31	VSS			90	VDD2L
32	DQ14			91	VDD2H
33	VDDQ			92	VDD1
34	DQ15			93	VSS
35	VSS			94	VDD2H
				Bottom	

NOTE 1 Additional pads are allowed for DRAM mfg-specific pads ("DNU"), or additional power pads as long as the extra pads are grouped with like-named pads.

NOTE 2 Applications are recommended to follow bit/byte assignments. Bit or Byte swapping at the application level requires review of MR and calibration features assigned to specific data bits/bytes.

16.3 Package Die Layout

Ballmaps for LPDDR5 dual-channel packages shall follow the pad order based on the second die placement (Channel B) being rotated with respect to the first die (Channel A) placement.

Ballmaps for LPDDR5 quad-channel packages shall follow the pad order based on:

1. The Channel B die placement being rotated with respect to the Channel A die placement.
2. The Channel D die placement being rotated with respect to the Channel C die placement.

BELOW IS FOR REFERENCE ONLY:
LPDDR5 is based on a single channel (x16) die concept. In contrast, LPDDR4 is based on a dual channel die concept with the pad order of the second channel being mirrored with respect to the first channel.

Examples of dual channel mirror die (LPDDR4) and single channel die (LPDDR5) package layout are shown below. LPDDR5 pad ordering has not been balloted and is shown for illustrative purposes only.

Table 439 – Package configuration example

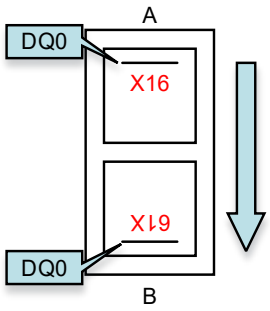

LPDDR4 Dual Channel Mirror Die

- Ch. B is folded down from Ch. A.

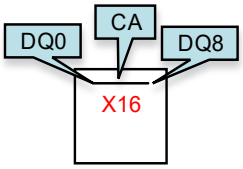

LPDDR5 single Channel die

- Pad order approach likely similar to LPDDR4

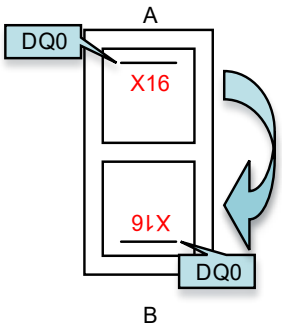

Example of placing 1 Ch. die in 2 Ch. configuration

- Ch. B is rotated from Ch. A

16.4 Package Configuration

TBD

16.5 ZQ Wiring

LPDDR5 devices are designed to allow up to NZQ die within a single package to connect to a common ZQ resource. When multiple die share a ZQ resource, one die is designated as the master die. ZQ Calibration Command to Latch Time (tZQCAL4, tZQCAL8 and tZQCAL16) varies depending on the number of die sharing a ZQ resource. (See 4.2.1, ZQ Calibration, for more information.)

Single and dual-channel packages shall support a single ZQ ball which is wired to all die.

Quad-channel packages support 2 ZQ balls where all die from two channels are wired to each ZQ ball. Wiring details are specified in the package ballmap.

Logical mapping – channel, rank and byte (for byte mode) - for all master die is specified in the package ballmap.

17. IDD Measurement

IDD values are for the entire operating voltage range, and all of them are for the entire standard range, with the exception of IDD6ET which is for the entire extended temperature range.

The values described below is the specification for 1ch based measurement.

Table 120 - LPDDR5 IDD Specification Parameters and Operating Conditions

Parameter/Condition	Sym-bol	Power Supply	6400 (x16)			Units	Notes
			95ºC	105ºC	125ºC		
Operating one bank active-Precharge current: tCK = tCKmin; tRC = tRCmin; CS is LOW between valid commands; CA bus inputs are switching; Data bus inputs are stable RDQS_t is stable (if Link ECC is enabled) ODT disabled WCK inputs are stable	$IDD0_1$	VDD1	3.40	3.50	3.80	mA	9
	$IDD0_2$	VDD2	39.00	42.00	50.00	mA	9
	$IDD0_Q$	VDDQ	1.00	1.00	1.00	mA	3
Idle power-down standby current: tCK = tCKmin; Power-down entry command is issued CS is LOW; All banks are idle; CA bus inputs are switching; Data bus inputs are stable; RDQS_t is stable (if Link ECC is enabled) ODT disabled WCK inputs are stable	$IDD2P_1$	VDD1	0.90	1.10	1.50	mA	
	$IDD2P_2$	VDD2	4.20	5.50	8.50	mA	
	$IDD2P_Q$	VDDQ	0.40	0.40	0.40	mA	3
Idle power-down standby current with clock stop: CK_t =LOW, CK_c =HIGH; CS is LOW; All banks are idle; CA bus inputs are stable; Data bus inputs are stable RDQS_t is stable (if Link ECC is enabled) ODT disabled WCK inputs are stable	$IDD2PS_1$	VDD1	0.90	1.10	1.50	mA	
	$IDD2PS_2$	VDD2	4.20	5.50	8.50	mA	
	$IDD2PS_Q$	VDDQ	0.40	0.40	0.40	mA	3
Idle non power-down standby current: tCK = tCKmin; CS is LOW; All banks are idle; CA bus inputs are switching; Data bus inputs are stable RDQS_t is stable (if Link ECC is enabled) ODT disabled WCK inputs are stable	$IDD2N_1$	VDD1	0.90	1.10	1.50	mA	
	$IDD2N_2$	VDD2	21.00	24.00	32.00	mA	
	$IDD2N_Q$	VDDQ	1.00	1.00	1.00	mA	3

Parameter/Condition	Sym-bol	Power Supply	6400 (x16)			Units	Notes
			95ºC	105ºC	125ºC		
Idle non power-down standby current with clock stopped: CK_t=LOW; CK_c=HIGH; CS is LOW; All banks are idle; CA bus inputs are stable; Data bus inputs are stable RDQS_t is stable (if Link ECC is enabled) ODT disabled WCK inputs are stable	$IDD2NS_1$	VDD1	0.90	1.10	1.50	mA	
	$IDD2NS_2$	VDD2	20.50	23.50	31.00	mA	
	$IDD2NS_Q$	VDDQ	1.00	1.00	1.00	mA	3
Active power-down standby current: tCK = tCKmin; CS is LOW; One bank is active; Power-down entry command is issued CA bus inputs are switching; Data bus inputs are stable RDQS_t is stable (if Link ECC is enabled) ODT disabled WCK inputs are stable	$IDD3P_1$	VDD1	1.50	1.70	2.40	mA	9
	$IDD3P_2$	VDD2	6.80	8.40	12.50	mA	9
	$IDD3P_Q$	VDDQ	0.40	0.40	0.40	mA	3
Active power-down standby current with clock stop: Power-down entry command is issued CK_t=LOW, CK_c=HIGH; CS is LOW; One bank is active; CA bus inputs are stable; Data bus inputs are stable RDQS_t is stable (if Link ECC is enabled) ODT disabled WCK inputs are stable and static	$IDD3PS_1$	VDD1	1.50	1.70	2.40	mA	9
	$IDD3PS_2$	VDD2	6.80	8.40	12.50	mA	9
	$IDD3PS_Q$	VDDQ	0.40	0.40	0.40	mA	4
Active non-power-down standby current: tCK = tCKmin; CS is LOW; One bank is active; CA bus inputs are switching; Data bus inputs are stable RDQS_t is stable (if Link ECC is enabled) ODT disabled WCK inputs are stable and static	$IDD3N_1$	VDD1	1.60	1.80	2.50	mA	9
	$IDD3N_2$	VDD2	29.00	34.00	43.00	mA	9
	$IDD3N_Q$	VDDQ	1.00	1.00	1.00	mA	4
Active non-power-down standby current with clock stopped: CK_t=LOW, CK_c=HIGH; CS is LOW; One bank is active; CA bus inputs are stable; Data bus inputs are stable RDQS_t is stable (if Link ECC is enabled) ODT disabled WCK inputs are stable and static	$IDD3NS_1$	VDD1	1.60	1.80	2.50	mA	9
	$IDD3NS_2$	VDD2	27.00	31.00	40.00	mA	9
	$IDD3NS_Q$	VDDQ	1.00	1.00	1.00	mA	4

Parameter/Condition	Sym-bol	Power Supply	6400 (x16)			Units	Notes
			95ºC	105ºC	125ºC		
Operating burst WRITE current @ BG Mode tCK = tCKmin; tWCK=tWCKmin; CS is LOW between valid commands; One bank in each bank group 1 and 2 is active; BL = 16 or 32 ; WL = WLmin; CA bus inputs are switching; 50% data change each burst transfer RDQS_t is stable (if Link ECC is enabled) ODT disabled	$IDD4W_1$	VDD1	10.60	11.00	12.00	mA	
	$IDD4W_2$	VDD2	270.00	278.00	295.00	mA	
	$IDD4W_Q$	VDDQ	1.00	1.00	1.00	mA	4
Operating burst READ current @ BG Mode tCK = tCKmin; tWCK=tWCKmin; CS is LOW between valid commands; One bank in each bank group 1 and 2 is active; BL = 16 or 32 ; RL = RLmin; CA bus inputs are switching; 50% data change each burst transfer ODT disabled	$IDD4R_1$	VDD1	8.10	8.30	9.00	mA	
	$IDD4R_2$	VDD2	288.00	295.00	315.00	mA	
	$IDD4R_Q$	VDDQ	77.50	77.50	77.50	mA	8

All-bank REFRESH Burst current:
tCK = tCKmin;
CS is LOW between valid commands;
tRC = tRFCabmin;
Burst refresh;
CA bus inputs are switching;
Data bus inputs are stable;
RDQS_t is stable (if Link ECC is enabled)
ODT disabled
WCK inputs are stable and static
	$IDD5_1$	VDD1	25.80	26.00	26.50	mA	

	$IDD5_2$	VDD2	156.00	160.00	171.00	mA	
	$IDD5_Q$	VDDQ	1.00	1.00	1.00	mA	4

All-bank REFRESH Average current:
tCK = tCKmin;
CS is LOW between valid commands;
tRC = tREFI;
CA bus inputs are switching;
Data bus inputs are stable;
RDQS_t is stable (if Link ECC is enabled)
ODT disabled
WCK inputs are stable and static
	$IDD5AB_1$	VDD1	2.90	3.00	3.30	mA	

	$IDD5AB_2$	VDD2	29.00	31.50	39.00	mA	
	$IDD5AB_Q$	VDDQ	1.00	1.00	1.00	mA	4

Per-bank REFRESH Average current:
tCK = tCKmin;
CS is LOW between valid commands;
tRC = tREFI/8;
CA bus inputs are switching;
Data bus inputs are stable;
RDQS_t is stable (if Link ECC is enabled)
ODT disabled
WCK inputs are stable and static
	$IDD5PB_1$	VDD1	2.90	3.00	3.30	mA	

	$IDD5PB_2$	VDD2	29.50	32.00	40.00	mA	
	$IDD5PB_Q$	VDDQ	1.00	1.00	1.00	mA	4

Parameter/Condition	Sym-bol	Power Supply	6400 (x16)			Units	Notes
			95ºC	105ºC	125ºC		
Power down Self refresh current: CK_t=LOW, CK_c=HIGH; CS is LOW; CA bus inputs are stable; Data bus inputs are stable; Maximum 1x Self-Refresh Rate; (≤85° C) Maximum TBDx Self-Refresh Rate; (>85° C) RDQS_t is stable (if Link ECC is enabled) ODT disabled WCK inputs are stable and static	$IDD6_1$	VDD1	4.70	9.00	17.50	mA	6,7
	$IDD6_2$	VDD2	27.00	53.00	96.00	mA	6,7
	$IDD6_Q$	VDDQ	1.00	1.00	1.00	mA	4,6,7,8

Notes

1. Published IDD values are the maximum of the distribution of the arithmetic mean.
2. ODT disabled. MR11 OP[6:4] = 000_B
3. IDD current specifications are tested after the device is properly initialized.
4. Measured currents are the summation of VDDQ and VDD2H / VDD2L.
5. Guaranteed by design with output load = 5pF and RON = 40 ohm.
6. The 1x Self-Refresh Rate is the rate at which the LPDDR5 device is refreshed internally during Self-Refresh, before going into the elevated Tem perature range.
7. This is the general definition that applies to full array Self Refresh.
8. When MR13 OP[7] is high, single VDD2 rail, VDD2L Current shall be added to VDD2H Current.
9. IDD values can be different according to the bank organization set by MR3 OP[4:3].
10. When DVFSC is enabled, the minimum tCK shall be set by following DVFSC operating frequency.