4Gb DDR3 SDRAM

Lead-Free&Halogen-Free

(RoHS Compliant)

H5TQ4G83CFR-xxC

H5TQ4G83CFR-xxI

H5TQ4G83CFR-xxL

H5TQ4G83CFR-xxJ

H5TQ4G63CFR-xxC

H5TQ4G63CFR-xxI

H5TQ4G63CFR-xxL

H5TQ4G63CFR-xxJ

*** SK Hynix reserves the right to change products or specifications without notice.**

Revision History

Revision No.	History	Draft Date	Remark
0.1	Initial Version	Feb. 2014	
0.2	PKG Dimensions Update	APR. 2014	Page 32,33
0.3	Operating Frequency Modified	July. 2014	Page 4, Note1

Description

The H5TQ4G83CFR-xxC,H5TQ4G63CFR-xxC, H5TQ4G83CFR-xxI, H5TQ4G63CFR-xxI, H5TQ4G83CFR-xxL, H5TQ4G63CFR-xxL,H5TQ4G83CFR-xxJ and H5TQ4G63CFR-xxJ are a 4,294,967,296-bit CMOS Double Data Rate III (DDR3) Synchronous DRAM, ideally suited for the main memory applications which requires large memory density and high bandwidth. SK Hynix 4Gb DDR3 SDRAMs offer fully synchronous operations referenced to both rising and falling edges of the clock. While all addresses and control inputs are latched on the rising edges of the CK (falling edges of the CK), Data, Data strobes and Write data masks inputs are sampled on both rising and falling edges of it. The data paths are internally pipelined and 8-bit prefetched to achieve very high bandwidth.

Device Features and Ordering Information

FEATURES

- VDD=VDDQ=1.5V +/- 0.075V
- Fully differential clock inputs (CK, $\overline{CK}$) operation
- Differential Data Strobe (DQS, $\overline{DQS}$)
- On chip DLL align DQ, DQS and $\overline{DQS}$ transition with CK transition
- DM masks write data-in at the both rising and falling edges of the data strobe
- All addresses and control inputs except data, data strobes and data masks latched on the rising edges of the clock
- Programmable CAS latency 5, 6, 7, 8, 9, 10, 11, 13 and 14 supported
- Programmable additive latency 0, CL-1, and CL-2 supported
- Programmable CAS Write latency (CWL) = 5, 6, 7, 8 9 and 10
- Programmable burst length 4/8 with both nibble sequential and interleave mode
- BL switch on the fly
- 8banks
- Average Refresh Cycle (Tcase of 0 ^{o}C~95 ^{o}C)
  - 7.8 µs at 0°C ~ 85 ^{o}C
  - 3.9 µs at 85°C ~ 95 ^{o}C

  Commercial Temperature(0°C ~ 95 ^{o}C)

  Industrial Temperature(-40°C ~ 95 ^{o}C)
- JEDEC standard 78ball FBGA(x8), 96ball FBGA (x16)
- Driver strength selected by EMRS
- Dynamic On Die Termination supported
- Asynchronous RESET pin supported
- ZQ calibration supported
- TDQS (Termination Data Strobe) supported (x8 only)
- Write Levelization supported
- 8 bit pre-fetch

*** This product in compliance with the RoHS directive.**

ORDERING INFORMATION

Part No.	Configuration	Power Consumption	Temperature	Package
H5TQ4G83CFR-*xxC	512M x 8	Normal Consumption	Commercial	78ball FBGA
H5TQ4G83CFR-*xxI			Industrial	
H5TQ4G83CFR-*xxL		Low Power Consumption (IDD6 Only)	Commercial	
H5TQ4G83CFR-*xxJ			Industrial	
H5TQ4G63CFR-*xxC	256M x 16	Normal Consumption	Commercial	96ball FBGA
H5TQ4G63CFR-*xxI			Industrial	
H5TQ4G63CFR-*xxL		Low Power Consumption (IDD6 Only)	Commercial	
H5TQ4G63CFR-*xxJ			Industrial	

* xx means Speed Bin Grade

OPERATING FREQUENCY

Speed Grade (Marking)	Frequency [Mbps]										Remark (CL-tRCD-tRP)
	CL5	CL6	CL7	CL8	CL9	CL10	CL11	CL12	CL13	CL14	
-H9	667	800	1066	1066	1333	1333					DDR3-1333 9-9-9
-PB	667	800	1066	1066	1333	1333	1600				DDR3-1600 11-11-11
-RD*		800	1066	1066	1333	1333	1600		1866		DDR3-1866 13-13-13
-TE		800	1066	1066	1333	1333	1600		1866	2133	DDR3-2133 14-14-14

*__Note1__: In case of 1.5V P/N (H5TQ4G8(6)3CFR), -RDC covers Lower speed of -PBC and -H9C

x8 Package Ball out (Top view): 78ball FBGA Package

	1	2	3	4	5	6	7	8	9	
A	VSS	VDD	NC				NF/$\overline{\text{TDQS}}$	VSS	VDD	A
B	VSS	VSSQ	DQ0				DM/TDQS	VSSQ	VDDQ	B
C	VDDQ	DQ2	DQS				DQ1	DQ3	VSSQ	C
D	VSSQ	DQ6	$\overline{\text{DQS}}$				VDD	VSS	VSSQ	D
E	VREFDQ	VDDQ	DQ4				DQ7	DQ5	VDDQ	E
F	NC	VSS	$\overline{\text{RAS}}$				CK	VSS	NC	F
G	ODT	VDD	$\overline{\text{CAS}}$				$\overline{\text{CK}}$	VDD	CKE	G
H	NC	$\overline{\text{CS}}$	$\overline{\text{WE}}$				A10/AP	ZQ	NC	H
J	VSS	BA0	BA2				A15	VREFCA	VSS	J
K	VDD	A3	A0				A12/$\overline{\text{BC}}$	BA1	VDD	K
L	VSS	A5	A2				A1	A4	VSS	L
M	VDD	A7	A9				A11	A6	VDD	M
N	VSS	$\overline{\text{RESET}}$	A13				A14	A8	VSS	N
	1	2	3	4	5	6	7	8	9	

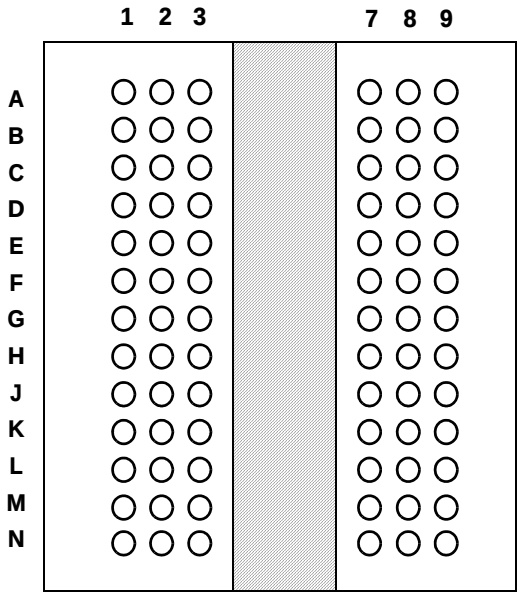

(Top View: See the balls through the Package)

○ Populated ball
+ Ball not populated

x16 Package Ball out (Top view): 96ball FBGA Package

	1	2	3	4	5	6	7	8	9	
A	VDDQ	DQU5	DQU7				DQU4	VDDQ	VSS	A
B	VSSQ	VDD	VSS				$\overline{\text{DQSU}}$	DQU6	VSSQ	B
C	VDDQ	DQU3	DQU1				DQSU	DQU2	VDDQ	C
D	VSSQ	VDDQ	DMU				DQU0	VSSQ	VDD	D
E	VSS	VSSQ	DQL0				DML	VSSQ	VDDQ	E
F	VDDQ	DQL2	DQSL				DQL1	DQL3	VSSQ	F
G	VSSQ	DQL6	$\overline{\text{DQSL}}$				VDD	VSS	VSSQ	G
H	VREFDQ	VDDQ	DQL4				DQL7	DQL5	VDDQ	H
J	NC	VSS	$\overline{\text{RAS}}$				CK	VSS	NC	J
K	ODT	VDD	$\overline{\text{CAS}}$				$\overline{\text{CK}}$	VDD	CKE	K
L	NC	$\overline{\text{CS}}$	$\overline{\text{WE}}$				A10/AP	ZQ	NC	L
M	VSS	BA0	BA2				NC	VREFCA	VSS	M
N	VDD	A3	A0				A12/$\overline{\text{BC}}$	BA1	VDD	N
P	VSS	A5	A2				A1	A4	VSS	P
R	VDD	A7	A9				A11	A6	VDD	R
T	VSS	$\overline{\text{RESET}}$	A13				A14	A8	VSS	T
	1	2	3	4	5	6	7	8	9	

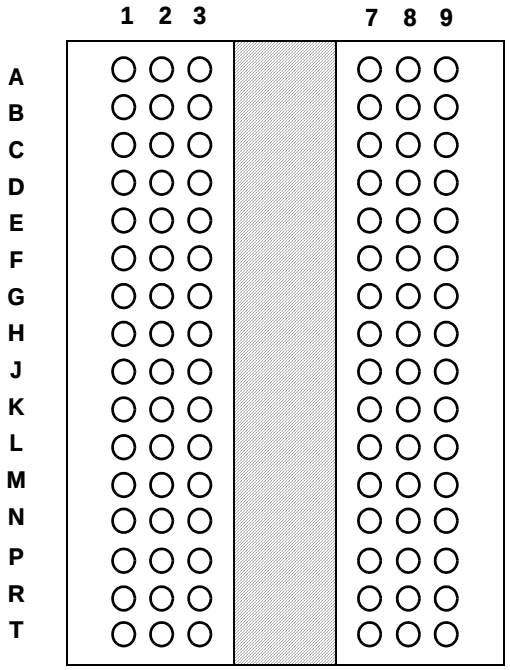

(Top View: See the balls through the Package)

○ Populated ball
+ Ball not populated

Pin Functional Description

Symbol	Type	Function
CK, $\overline{CK}$	Input	Clock: CK and $\overline{CK}$ are differential clock inputs. All address and control input signals are sampled on the crossing of the positive edge of CK and negative edge of $\overline{CK}$.
CKE, (CKE0), (CKE1)	Input	Clock Enable: CKE HIGH activates, and CKE Low deactivates, internal clock signals and device input buffers and output drivers. Taking CKE Low provides Precharge Power-Down and Self-Refresh operation (all banks idle), or Active Power-Down (row Active in any bank). CKE is asynchronous for Self-Refresh exit. After VREFCA and VREFDQ have become stable during the power on and initialization sequence, they must be maintained during all operations (including Self-Refresh). CKE must be maintained high throughout read and write accesses. Input buffers, excluding CK, $\overline{CK}$, ODT and CKE, are disabled during power-down. Input buffers, excluding CKE, are disabled during Self-Refresh.
$\overline{CS}$, ($\overline{CS0}$), ($\overline{CS1}$), ($\overline{CS2}$), ($\overline{CS3}$)	Input	Chip Select: All commands are masked when $\overline{CS}$ is registered HIGH. $\overline{CS}$ provides for external Rank selection on systems with multiple Ranks. $\overline{CS}$ is considered part of the command code.
ODT, (ODT0), (ODT1)	Input	On Die Termination: ODT (registered HIGH) enables termination resistance internal to the DDR3 SDRAM. When enabled, ODT is only applied to each DQ, DQS, $\overline{DQS}$ and DM/TDQS, NU/$\overline{TDQS}$ (When TDQS is enabled via Mode Register A11=1 in MR1) signal for x4/x8 configurations. For x16 configuration, ODT is applied to each DQ, DQSU, $\overline{DQSU}$, DQSL, $\overline{DQSL}$, DMU, and DML signal. The ODT pin will be ignored if MR1 is programmed to disable ODT.
$\overline{RAS}$, $\overline{CAS}$, $\overline{WE}$	Input	Command Inputs: $\overline{RAS}$, $\overline{CAS}$ and $\overline{WE}$ (along with $\overline{CS}$) define the command being entered.
DM, (DMU), (DML)	Input	Input Data Mask: DM is an input mask signal for write data. Input data is masked when DM is sampled HIGH coincident with that input data during a Write access. DM is sampled on both edges of DQS. For x8 device, the function of DM or TDQS/$\overline{TDQS}$ is enabled by Mode Register A11 setting in MR1.
BA0 - BA2	Input	Bank Address Inputs: BA0 - BA2 define to which bank an Active, Read, Write or Precharge command is being applied. Bank address also determines if the mode register or extended mode register is to be accessed during a MRS cycle.
A0 - A15	Input	Address Inputs: Provide the row address for Active commands and the column address for Read/Write commands to select one location out of the memory array in the respective bank. (A10/AP and A12/$\overline{BC}$ have additional functions, see below). The address inputs also provide the op-code during Mode Register Set commands.
A10 / AP	Input	Auto-precharge: A10 is sampled during Read/Write commands to determine whether Autoprecharge should be performed to the accessed bank after the Read/Write operation. (HIGH: Autoprecharge; LOW: no Autoprecharge).A10 is sampled during a Precharge command to determine whether the Precharge applies to one bank (A10 LOW) or all banks (A10 HIGH). If only one bank is to be precharged, the bank is selected by bank addresses.
A12 / $\overline{BC}$	Input	Burst Chop: A12 / $\overline{BC}$ is sampled during Read and Write commands to determine if burst chop (on-the-fly) will be performed. (HIGH, no burst chop; LOW: burst chopped). See command truth table for details.

Symbol	Type	Function
$\overline{\text{RESET}}$	Input	Active Low Asynchronous Reset: Reset is active when $\overline{\text{RESET}}$ is LOW, and inactive when $\overline{\text{RESET}}$ is HIGH. $\overline{\text{RESET}}$ must be HIGH during normal operation. $\overline{\text{RESET}}$ is a CMOS rail-to-rail signal with DC high and low at 80% and 20% of V_{DD}, i.e. 1.20V for DC high and 0.30V for DC low.
DQ	Input / Output	Data Input/ Output: Bi-directional data bus.
DQU, DQL, DQS, $\overline{\text{DQS}}$, DQSU, $\overline{\text{DQSU}}$, DQSL, $\overline{\text{DQSL}}$	Input / Output	Data Strobe: output with read data, input with write data. Edge-aligned with read data, centered in write data. The data strobe DQS, DQSL, and DQSU are paired with differential signals $\overline{\text{DQS}}$, $\overline{\text{DQSL}}$, and $\overline{\text{DQSU}}$, respectively, to provide differential pair signaling to the system during reads and writes. DDR3 SDRAM supports differential data strobe only and does not support single-ended.
TDQS, $\overline{\text{TDQS}}$	Output	Termination Data Strobe: TDQS/$\overline{\text{TDQS}}$ is applicable for x8 DRAMs only. When enabled via Mode Register A11 = 1 in MR1, the DRAM will enable the same termination resistance function on TDQS/$\overline{\text{TDQS}}$ that is applied to DQS/$\overline{\text{DQS}}$. When disabled via mode register A11 = 0 in MR1, DM/TDQS will provide the data mask function and $\overline{\text{TDQS}}$ is not used. x4/x16 DRAMs must disable the TDQS function via mode register A11 = 0 in MR1.
NC		No Connect: No internal electrical connection is present.
NF		No Function
V_{DDQ}	Supply	DQ Power Supply: 1.5 V +/- 0.075 V
V_{SSQ}	Supply	DQ Ground
V_{DD}	Supply	Power Supply: 1.5 V +/- 0.075 V
V_{SS}	Supply	Ground
V_{REFDQ}	Supply	Reference voltage for DQ
V_{REFCA}	Supply	Reference voltage for CA
ZQ	Supply	Reference Pin for ZQ calibration

Note:
Input only pins (BA0-BA2, A0-A15, $\overline{\text{RAS}}$, $\overline{\text{CAS}}$, $\overline{\text{WE}}$, $\overline{\text{CS}}$, CKE, ODT, DM, and $\overline{\text{RESET}}$) do not supply termination.

ROW AND COLUMN ADDRESS TABLE

4Gb

Configuration	512Mb x 8	256Mb x 16
# of Banks	8	8
Bank Address	BA0 - BA2	BA0 - BA2
Auto precharge	A10/AP	A10/AP
BL switch on the fly	A12/BC	A12/$\overline{BC}$
Row Address	A0 - A15	A0 - A14
Column Address	A0 - A9	A0 - A9
Page size [1]	1 KB	2 KB

Note1: Page size is the number of bytes of data delivered from the array to the internal sense amplifiers when an ACTIVE command is registered. Page size is per bank, calculated as follows:

page size = $2^{COLBITS}$ * ORG ÷ 8

where COLBITS = the number of column address bits, ORG = the number of I/O (DQ) bits

Absolute Maximum Ratings

Absolute Maximum DC Ratings

Absolute Maximum DC Ratings

Symbol	Parameter	Rating	Units	Notes
VDD	Voltage on VDD pin relative to Vss	- 0.4 V ~ 1.80 V	V	1,3
VDDQ	Voltage on VDDQ pin relative to Vss	- 0.4 V ~ 1.80 V	V	1,3
V_{IN}, V_{OUT}	Voltage on any pin relative to Vss	- 0.4 V ~ 1.80 V	V	1
T_{STG}	Storage Temperature	-55 to +100	^{o}C	1, 2

Notes:

1. Stresses greater than those listed under “Absolute Maximum Ratings” may cause permanent damage to the device. This is a stress rating only and functional operation of the device at these or any other conditions above those indicated in the operational sections of this specification is not implied. Exposure to absolute maximum rating conditions for extended periods may affect reliability.
2. Storage Temperature is the case surface temperature on the center/top side of the DRAM. For the measurement conditions, please refer to JESD51-2 standard.
3. VDD and VDDQ must be within 300mV of each other at all times; and VREF must not be greater than 0.6XVDDQ,When VDD and VDDQ are less than 500mV; VREF may be equal to or less than 300mV.

DRAM Component Operating Temperature Range

Temperature Range

Symbol	Parameter	Rating	Units	Notes
T_{OPER}	Normal Operating Temperature Range	0 to 85	^{o}C	1,2
	Extended Temperature Range	85 to 95	^{o}C	1,4
	Industrial Temperature Range	-40 to 95	^{o}C	1,3,4

Notes:

1. Operating Temperature TOPER is the case surface temperature on the center / top side of the DRAM. For measurement conditions, please refer to the JEDEC document JESD51-2.
2. The Normal Temperature Range specifies the temperatures where all DRAM specifications will be supported. During operation, the DRAM case temperature must be maintained between 0 - 85oC under all operating conditions.
3. The Industrial Temperature Range specifies the temperatures where all DRAM specifications will be supported. During operation, the DRAM case temperature must be maintained between -40 - 85oC under all operating conditions.
4. Some applications require operation of the DRAM in the Extended Temperature Range between 85oC and 95oC case temperature. Full specifications are guaranteed in this range, but the following additional conditions apply:
   a. Refresh commands must be doubled in frequency, therefore reducing the Refresh interval tREFI to 3.9 µs.
   b. If Self-Refresh operation is required in the Extended Temperature Range, then it is mandatory to use the Manual Self-Refresh mode with Extended Temperature Range capability (MR2 A6 = 0b and MR2 A7 = 1b).

AC & DC Operating Conditions

Recommended DC Operating Conditions

Recommended DC Operating Conditions

Symbol	Parameter	Rating			Units	Notes
		Min.	Typ.	Max.		
VDD	Supply Voltage	1.425	1.500	1.575	V	1,2
VDDQ	Supply Voltage for Output	1.425	1.500	1.575	V	1,2

Notes:

1. Under all conditions, VDDQ must be less than or equal to VDD.
2. VDDQ tracks with VDD. AC parameters are measured with VDD and VDDQ tied together.

IDD and IDDQ Specification Parameters and Test Conditions

IDD and IDDQ Measurement Conditions

In this chapter, IDD and IDDQ measurement conditions such as test load and patterns are defined. Figure 1. shows the setup and test load for IDD and IDDQ measurements.

- IDD currents (such as IDD0, IDD1, IDD2N, IDD2NT, IDD2P0, IDD2P1, IDD2Q, IDD3N, IDD3P, IDD4R, IDD4W, IDD5B, IDD6, IDD6ET, and IDD7) are measured as time-averaged currents with all VDD balls of the DDR3 SDRAM under test tied together. Any IDDQ current is not included in IDD currents.
- IDDQ currents (such as IDDQ2NT and IDDQ4R) are measured as time-averaged currents with all VDDQ balls of the DDR3 SDRAM under test tied together. Any IDD current is not included in IDDQ currents.
  Attention: IDDQ values cannot be directly used to calculate IO power of the DDR3 SDRAM. They can be used to support correlation of simulated IO power to actual IO power as outlined in Figure 2. In DRAM module application, IDDQ cannot be measured separately since VDD and VDDQ are using one merged-power layer in Module PCB.

For IDD and IDDQ measurements, the following definitions apply:

- ”0” and “LOW” is defined as VIN <= $V_{ILAC(max)}$.
- ”1” and “HIGH” is defined as VIN >= $V_{IHAC(max)}$.
- “MID_LEVEL” is defined as inputs are VREF = VDD/2.
- Timing used for IDD and IDDQ Measurement-Loop Patterns are provided in Table 1.
- Basic IDD and IDDQ Measurement Conditions are described in Table 2.
- Detailed IDD and IDDQ Measurement-Loop Patterns are described in Table 3 through Table 10.
- IDD Measurements are done after properly initializing the DDR3 SDRAM. This includes but is not limited to setting
  RON = RZQ/7 (34 Ohm in MR1);
  Qoff = 0_B (Output Buffer enabled in MR1);
  RTT_Nom = RZQ/6 (40 Ohm in MR1);
  RTT_Wr = RZQ/2 (120 Ohm in MR2);
  TDQS Feature disabled in MR1
- Attention: The IDD and IDDQ Measurement-Loop Patterns need to be executed at least one time before actual IDD or IDDQ measurement is started.
- Define D = {$\overline{CS}$, $\overline{RAS}$, $\overline{CAS}$, $\overline{WE}$}:= {HIGH, LOW, LOW, LOW}
- Define $\overline{D}$ = {$\overline{CS}$, $\overline{RAS}$, $\overline{CAS}$, $\overline{WE}$}:= {HIGH, HIGH, HIGH, HIGH}

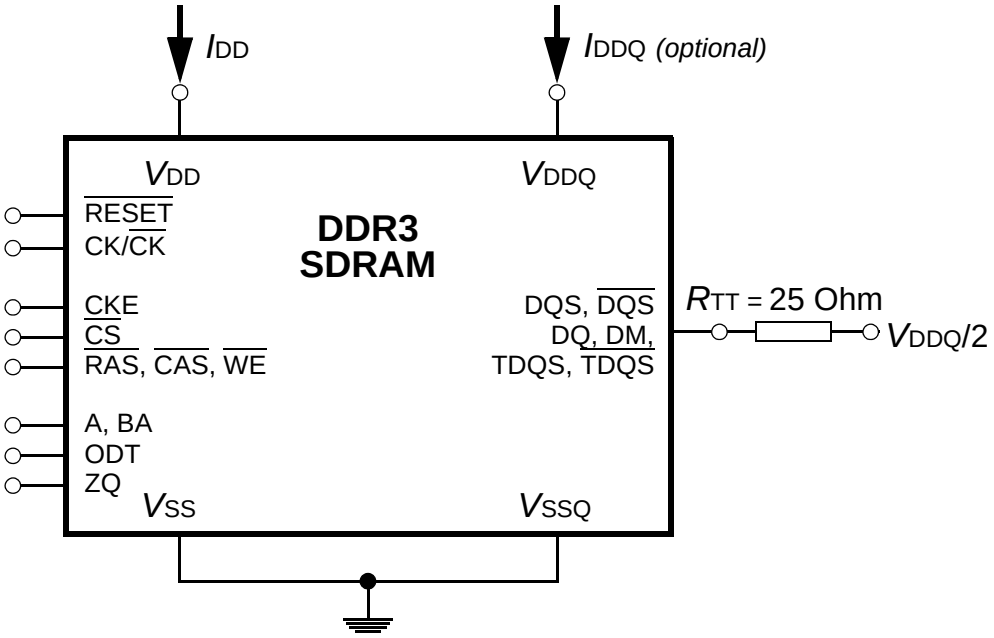

Figure 1 - Measurement Setup and Test Load for IDD and IDDQ (optional) Measurements
[Note: DIMM level Output test load condition may be different from above]

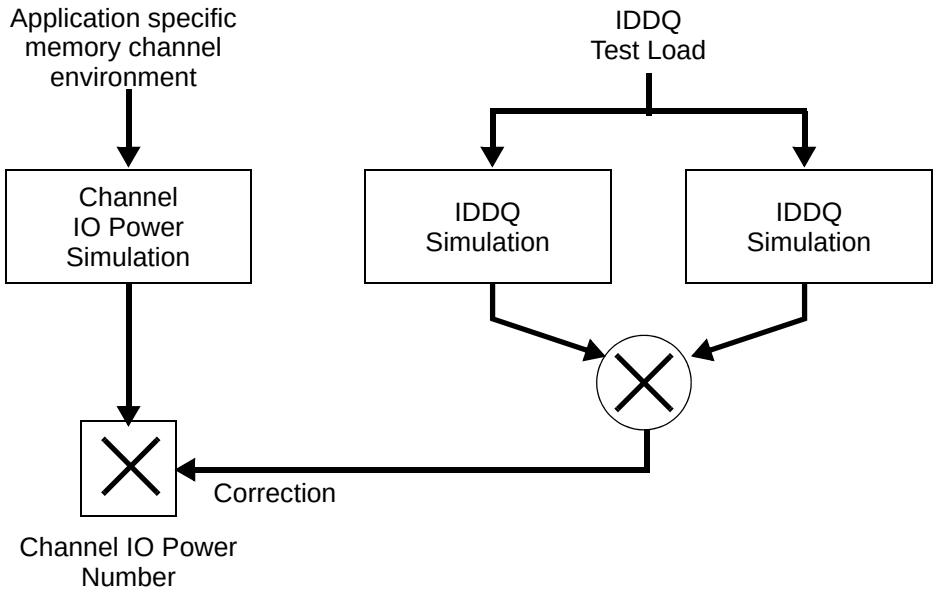

Figure 2 - Correlation from simulated Channel IO Power to actual Channel IO Power supported by IDDQ Measurement

Table 1 -Timings used for IDD and IDDQ Measurement-Loop Patterns

Symbol		DDR3-1066	DDR3-1333	DDR3-1600	DDR3-1866	DDR3-2133	Unit
		7-7-7	9-9-9	11-11-11	13-13-13	14-14-14	
t_{CK}		1.875	1.5	1.25	1.07	0.935	ns
CL		7	9	11	13	14	nCK
n_{RCD}		7	9	11	13	14	nCK
n_{RC}		27	33	39	45	50	nCK
n_{RAS}		20	24	28	32	36	nCK
n_{RP}		7	9	11	13	14	nCK
n_{FAW}	1KB page size	20	20	24	26	27	nCK
	2KB page size	27	30	32	33	38	nCK
n_{RRD}	1KB page size	4	4	5	5	6	nCK
	2KB page size	6	5	6	6	7	nCK
n_{RFC} -512Mb		48	60	72	85	97	nCK
n_{RFC}-1 Gb		59	74	88	103	118	nCK
n_{RFC}- 2 Gb		86	107	128	150	172	nCK
n_{RFC}- 4 Gb		139	174	208	243	279	nCK
n_{RFC}- 8 Gb		187	234	280	328	375	nCK

Table 2 -Basic IDD and IDDQ Measurement Conditions

Symbol	Description
I_{DD0}	Operating One Bank Active-Precharge Current CKE: High; External clock: On; tCK, nRC, nRAS, CL: see Table 1; BL: 8[a)]; AL: 0; $\overline{CS}$: High between ACT and PRE; Command, Address, Bank Address Inputs: partially toggling according to Table 3; Data IO: MID-LEVEL; DM: stable at 0; Bank Activity: Cycling with one bank active at a time: 0,0,1,1,2,2,... (see Table 3); Output Buffer and RTT: Enabled in Mode Registers[b)]; ODT Signal: stable at 0; Pattern Details: see Table 3.

Symbol	Description
I_{DD1}	Operating One Bank Active-Precharge Current CKE: High; External clock: On; tCK, nRC, nRAS, nRCD, CL: see Table 1; BL: 8[a)]; AL: 0; $\overline{CS}$: High between ACT, RD and PRE; Command, Address; Bank Address Inputs, Data IO: partially toggling according to Table 4; DM: stable at 0; Bank Activity: Cycling with on bank active at a time: 0,0,1,1,2,2,... (see Table 4); Output Buffer and RTT: Enabled in Mode Registers[b)]; ODT Signal: stable at 0; Pattern Details: see Table 4.
I_{DD2N}	Precharge Standby Current CKE: High; External clock: On; tCK, CL: see Table 1; BL: 8[a)]; AL: 0; $\overline{CS}$: stable at 1; Command, Address, Bank Address Inputs: partially toggling according to Table 5; Data IO: MID_LEVEL; DM: stable at 0; Bank Activity: all banks closed; Output Buffer and RTT: Enabled in Mode Registers[b)]; ODT Signal: stable at 0; Pattern Details: see Table 5.
I_{DD2NT}	Precharge Standby ODT Current CKE: High; External clock: On; tCK, CL: see Table 1; BL: 8[a)]; AL: 0; $\overline{CS}$: stable at 1; Command, Address, Bank Address Inputs: partially toggling according to Table 6; Data IO: MID_LEVEL; DM: stable at 0; Bank Activity: all banks closed; Output Buffer and RTT: Enabled in Mode Registers[b)]; ODT Signal: toggling according to Table 6; Pattern Details: see Table 6.
I_{DD2P0}	Precharge Power-Down Current Slow Exit CKE: Low; External clock: On; tCK, CL: see Table 1; BL: 8[a)]; AL: 0; $\overline{CS}$: stable at 1; Command, Address, Bank Address Inputs: stable at 0; Data IO: MID_LEVEL; DM: stable at 0; Bank Activity: all banks closed; Output Buffer and RTT: Enabled in Mode Registers[b)]; ODT Signal: stable at 0; Precharge Power Down Mode: Slow Exit[c)]
I_{DD2P1}	Precharge Power-Down Current Fast Exit CKE: Low; External clock: On; tCK, CL: see Table 1; BL: 8[a)]; AL: 0; $\overline{CS}$: stable at 1; Command, Address, Bank Address Inputs: stable at 0; Data IO: MID_LEVEL; DM: stable at 0; Bank Activity: all banks closed; Output Buffer and RTT: Enabled in Mode Registers[b)]; ODT Signal: stable at 0; Precharge Power Down Mode: Fast Exit[c)]
I_{DD2Q}	Precharge Quiet Standby Current CKE: High; External clock: On; tCK, CL: see Table 1; BL: 8[a)]; AL: 0; $\overline{CS}$: stable at 1; Command, Address, Bank Address Inputs: stable at 0; Data IO: MID_LEVEL; DM: stable at 0; Bank Activity: all banks closed; Output Buffer and RTT: Enabled in Mode Registers[b)]; ODT Signal: stable at 0

Symbol	Description
I_{DD3N}	Active Standby Current CKE: High; External clock: On; tCK, CL: see Table 1; BL: 8[a]; AL: 0; $\overline{CS}$: stable at 1; Command, Address, Bank Address Inputs: partially toggling according to Table 5; Data IO: MID_LEVEL; DM: stable at 0; Bank Activity: all banks open; Output Buffer and RTT: Enabled in Mode Registers[b]; ODT Signal: stable at 0; Pattern Details: see Table 5.
I_{DD3P}	Active Power-Down Current CKE: Low; External clock: On; tCK, CL: see Table 1; BL: 8[a]; AL: 0; $\overline{CS}$: stable at 1; Command, Address, Bank Address Inputs: stable at 0; Data IO: MID_LEVEL; DM: stable at 0; Bank Activity: all banks open; Output Buffer and RTT: Enabled in Mode Registers[b]; ODT Signal: stable at 0
I_{DD4R}	Operating Burst Read Current CKE: High; External clock: On; tCK, CL: see Table 1; BL: 8[a]; AL: 0; $\overline{CS}$: High between RD; Command, Address, Bank Address Inputs: partially toggling according to Table 7; Data IO: seamless read data burst with different data between one burst and the next one according to Table 7; DM: stable at 0; Bank Activity: all banks open, RD commands cycling through banks: 0,0,1,1,2,2,...(see Table 7); Output Buffer and RTT: Enabled in Mode Registers[b]; ODT Signal: stable at 0; Pattern Details: see Table 7.
I_{DD4W}	Operating Burst Write Current CKE: High; External clock: On; tCK, CL: see Table 1; BL: 8[a]; AL: 0; $\overline{CS}$: High between WR; Command, Address, Bank Address Inputs: partially toggling according to Table 8; Data IO: seamless read data burst with different data between one burst and the next one according to Table 8; DM: stable at 0; Bank Activity: all banks open, WR commands cycling through banks: 0,0,1,1,2,2,...(see Table 8); Output Buffer and RTT: Enabled in Mode Registers[b]; ODT Signal: stable at HIGH; Pattern Details: see Table 8.
I_{DD5B}	Burst Refresh Current CKE: High; External clock: On; tCK, CL, nRFC: see Table 1; BL: 8[a]; AL: 0; $\overline{CS}$: High between REF; Command, Address, Bank Address Inputs: partially toggling according to Table 9; Data IO: MID_LEVEL; DM: stable at 0; Bank Activity: REF command every nREF (see Table 9); Output Buffer and RTT: Enabled in Mode Registers[b]; ODT Signal: stable at 0; Pattern Details: see Table 9.
I_{DD6}	Self-Refresh Current: Normal Temperature Range T_{CASE}: 0 - 85 °C; Auto Self-Refresh (ASR): Disabled[d];Self-Refresh Temperature Range (SRT): Normal[e]; CKE: Low; External clock: Off; CK and $\overline{CK}$: LOW; CL: see Table 1; BL: 8[a]; AL: 0; $\overline{CS}$, Command, Address, Bank Address Inputs, Data IO: MID_LEVEL; DM: stable at 0; Bank Activity: Self-Refresh operation; Output Buffer and RTT: Enabled in Mode Registers[b]; ODT Signal: MID_LEVEL

Symbol	Description
I_{DD6ET}	Self-Refresh Current: Extended Temperature Range T_{CASE}: 0 - 95 °C; Auto Self-Refresh (ASR): Disabled[d];Self-Refresh Temperature Range (SRT): Extended[e]; CKE: Low; External clock: Off; CK and $\overline{CK}$: LOW; CL: see Table 1; BL: 8[a]; AL: 0; $\overline{CS}$, Command, Address, Bank Address Inputs, Data IO: MID_LEVEL; DM: stable at 0; Bank Activity: Extended Temperature Self-Refresh operation; Output Buffer and RTT: Enabled in Mode Registers[b]; ODT Signal: MID_LEVEL
I_{DD7}	Operating Bank Interleave Read Current CKE: High; External clock: On; tCK, nRC, nRAS, nRCD, NRRD, nFAW, CL: see Table 1; BL: 8[a), f)]; AL: CL-1; $\overline{CS}$: High between ACT and RDA; Command, Address, Bank Address Inputs: partially toggling according to Table 10; Data IO: read data burst with different data between one burst and the next one according to Table 10; DM: stable at 0; Bank Activity: two times interleaved cycling through banks (0, 1,...7) with different addressing, wee Table 10; Output Buffer and RTT: Enabled in Mode Registers[b]; ODT Signal: stable at 0; Pattern Details: see Table 10.

a) Burst Length: BL8 fixed by MRS: set MR0 A[1,0]=00B

b) Output Buffer Enable: set MR1 A[12] = 0B; set MR1 A[5,1] = 01B; RTT_Nom enable: set MR1 A[9,6,2] = 011B; RTT_Wr enable: set MR2 A[10,9] = 10B

c) Precharge Power Down Mode: set MR0 A12=0B for Slow Exit or MR0 A12 = 1B for Fast Exit

d) Auto Self-Refresh (ASR): set MR2 A6 = 0B to disable or 1B to enable feature

e) Self-Refresh Temperature Range (SRT): set MR2 A7 = 0B for normal or 1B for extended temperature range

f) Read Burst Type: Nibble Sequential, set MR0 A[3] = 0B

Table 3 - IDD0 Measurement-Loop Pattern[a)]

CK, $\overline{CK}$	CKE	Sub-Loop	Cycle Number	Command	$\overline{CS}$	$\overline{RAS}$	$\overline{CAS}$	$\overline{WE}$	ODT	BA[2:0]	A[15:11]	A[10]	A[9:7]	A[6:3]	A[2:0]	Data[b)]
toggling	Static High	0	0	ACT	0	0	1	1	0	0	00	0	0	0	0	-
			1,2	D, D	1	0	0	0	0	0	00	0	0	0	0	-
			3,4	$\overline{D}$, $\overline{D}$	1	1	1	1	0	0	00	0	0	0	0	-
			...	repeat pattern 1...4 until nRAS - 1, truncate if necessary												
			nRAS	PRE	0	0	1	0	0	0	00	0	0	0	0	-
			...	repeat pattern 1...4 until nRC - 1, truncate if necessary												
			1*nRC+0	ACT	0	0	1	1	0	0	00	0	0	F	0	-
			1*nRC+1, 2	D, D	1	0	0	0	0	0	00	0	0	F	0	-
			1*nRC+3, 4	$\overline{D}$, $\overline{D}$	1	1	1	1	0	0	00	0	0	F	0	-
			...	repeat pattern 1...4 until 1*nRC + nRAS - 1, truncate if necessary												
			1*nRC+nRAS	PRE	0	0	1	0	0	0	00	0	0	F	0	-
			...	repeat pattern 1...4 until 2*nRC - 1, truncate if necessary												
		1	2*nRC	repeat Sub-Loop 0, use BA[2:0] = 1 instead												
		2	4*nRC	repeat Sub-Loop 0, use BA[2:0] = 2 instead												
		3	6*nRC	repeat Sub-Loop 0, use BA[2:0] = 3 instead												
		4	8*nRC	repeat Sub-Loop 0, use BA[2:0] = 4 instead												
		5	10*nRC	repeat Sub-Loop 0, use BA[2:0] = 5 instead												
		6	12*nRC	repeat Sub-Loop 0, use BA[2:0] = 6 instead												
		7	14*nRC	repeat Sub-Loop 0, use BA[2:0] = 7 instead												

a) DM must be driven LOW all the time. DQS, $\overline{DQS}$ are MID-LEVEL.

b) DQ signals are MID-LEVEL.

Table 4 - IDD1 Measurement-Loop Pattern[a)]

CK, $\overline{CK}$	CKE	Sub-Loop	Cycle Number	Command	$\overline{CS}$	$\overline{RAS}$	$\overline{CAS}$	$\overline{WE}$	ODT	BA[2:0]	A[15:11]	A[10]	A[9:7]	A[6:3]	A[2:0]	Data[b)]
toggling	Static High	0	0	ACT	0	0	1	1	0	0	00	0	0	0	0	-
			1,2	D, D	1	0	0	0	0	0	00	0	0	0	0	-
			3,4	$\overline{D}$, $\overline{D}$	1	1	1	1	0	0	00	0	0	0	0	-
			...	repeat pattern 1...4 until nRCD - 1, truncate if necessary												
			nRCD	RD	0	1	0	1	0	0	00	0	0	0	0	00000000
			...	repeat pattern 1...4 until nRAS - 1, truncate if necessary												
			nRAS	PRE	0	0	1	0	0	0	00	0	0	0	0	-
			...	repeat pattern 1...4 until nRC - 1, truncate if necessary												
			1*nRC+0	ACT	0	0	1	1	0	0	00	0	0	F	0	-
			1*nRC+1,2	D, D	1	0	0	0	0	0	00	0	0	F	0	-
			1*nRC+3,4	$\overline{D}$, $\overline{D}$	1	1	1	1	0	0	00	0	0	F	0	-
			...	repeat pattern nRC + 1,...4 until nRC + nRCE - 1, truncate if necessary												
			1*nRC+nRCD	RD	0	1	0	1	0	0	00	0	0	F	0	00110011
			...	repeat pattern nRC + 1,...4 until nRC + nRAS - 1, truncate if necessary												
			1*nRC+nRAS	PRE	0	0	1	0	0	0	00	0	0	F	0	-
			...	repeat pattern nRC + 1,...4 until *2 nRC - 1, truncate if necessary												
		1	2*nRC	repeat Sub-Loop 0, use BA[2:0] = 1 instead												
		2	4*nRC	repeat Sub-Loop 0, use BA[2:0] = 2 instead												
		3	6*nRC	repeat Sub-Loop 0, use BA[2:0] = 3 instead												
		4	8*nRC	repeat Sub-Loop 0, use BA[2:0] = 4 instead												
		5	10*nRC	repeat Sub-Loop 0, use BA[2:0] = 5 instead												
		6	12*nRC	repeat Sub-Loop 0, use BA[2:0] = 6 instead												
		7	14*nRC	repeat Sub-Loop 0, use BA[2:0] = 7 instead												

a) DM must be driven LOW all the time. DQS, $\overline{DQS}$ are used according to RD Commands, otherwise MID-LEVEL.

b) Burst Sequence driven on each DQ signal by Read Command. Outside burst operation, DQ signals are MID_LEVEL.

Table 5 - IDD2N and IDD3N Measurement-Loop Pattern[a)]

CK, $\overline{CK}$	CKE	Sub-Loop	Cycle Number	Command	$\overline{CS}$	$\overline{RAS}$	$\overline{CAS}$	$\overline{WE}$	ODT	BA[2:0]	A[15:11]	A[10]	A[9:7]	A[6:3]	A[2:0]	Data[b)]
toggling	Static High	0	0	D	1	0	0	0	0	0	0	0	0	0	0	-
			1	D	1	0	0	0	0	0	0	0	0	0	0	-
			2	$\overline{D}$	1	1	1	1	0	0	0	0	0	F	0	-
			3	$\overline{D}$	1	1	1	1	0	0	0	0	0	F	0	-
		1	4-7	repeat Sub-Loop 0, use BA[2:0] = 1 instead												
		2	8-11	repeat Sub-Loop 0, use BA[2:0] = 2 instead												
		3	12-15	repeat Sub-Loop 0, use BA[2:0] = 3 instead												
		4	16-19	repeat Sub-Loop 0, use BA[2:0] = 4 instead												
		5	20-23	repeat Sub-Loop 0, use BA[2:0] = 5 instead												
		6	24-17	repeat Sub-Loop 0, use BA[2:0] = 6 instead												
		7	28-31	repeat Sub-Loop 0, use BA[2:0] = 7 instead												

a) DM must be driven LOW all the time. DQS, $\overline{DQS}$ are MID-LEVEL.
b) DQ signals are MID-LEVEL.

Table 6 - IDD2NT and IDDQ2NT Measurement-Loop Pattern[a)]

CK, $\overline{CK}$	CKE	Sub-Loop	Cycle Number	Command	$\overline{CS}$	$\overline{RAS}$	$\overline{CAS}$	$\overline{WE}$	ODT	BA[2:0]	A[15:11]	A[10]	A[9:7]	A[6:3]	A[2:0]	Data[b)]
toggling	Static High	0	0	D	1	0	0	0	0	0	0	0	0	0	0	-
			1	D	1	0	0	0	0	0	0	0	0	0	0	-
			2	$\overline{D}$	1	1	1	1	0	0	0	0	0	F	0	-
			3	$\overline{D}$	1	1	1	1	0	0	0	0	0	F	0	-
		1	4-7	repeat Sub-Loop 0, but ODT = 0 and BA[2:0] = 1												
		2	8-11	repeat Sub-Loop 0, but ODT = 1 and BA[2:0] = 2												
		3	12-15	repeat Sub-Loop 0, but ODT = 1 and BA[2:0] = 3												
		4	16-19	repeat Sub-Loop 0, but ODT = 0 and BA[2:0] = 4												
		5	20-23	repeat Sub-Loop 0, but ODT = 0 and BA[2:0] = 5												
		6	24-17	repeat Sub-Loop 0, but ODT = 1 and BA[2:0] = 6												
		7	28-31	repeat Sub-Loop 0, but ODT = 1 and BA[2:0] = 7												

a) DM must be driven LOW all the time. DQS, $\overline{DQS}$ are MID-LEVEL.
b) DQ signals are MID-LEVEL.

Table 7 - IDD4R and IDDQ4R Measurement-Loop Pattern[a)]

CK, $\overline{CK}$	CKE	Sub-Loop	Cycle Number	Command	$\overline{CS}$	$\overline{RAS}$	$\overline{CAS}$	$\overline{WE}$	ODT	BA[2:0]	A[15:11]	A[10]	A[9:7]	A[6:3]	A[2:0]	Data[b)]
toggling	Static High	0	0	RD	0	1	0	1	0	0	00	0	0	0	0	00000000
			1	D	1	0	0	0	0	0	00	0	0	0	0	-
			2,3	$\overline{D}$,$\overline{D}$	1	1	1	1	0	0	00	0	0	0	0	-
			4	RD	0	1	0	1	0	0	00	0	0	F	0	00110011
			5	D	1	0	0	0	0	0	00	0	0	F	0	-
			6,7	$\overline{D}$,$\overline{D}$	1	1	1	1	0	0	00	0	0	F	0	-
		1	8-15	repeat Sub-Loop 0, but BA[2:0] = 1												
		2	16-23	repeat Sub-Loop 0, but BA[2:0] = 2												
		3	24-31	repeat Sub-Loop 0, but BA[2:0] = 3												
		4	32-39	repeat Sub-Loop 0, but BA[2:0] = 4												
		5	40-47	repeat Sub-Loop 0, but BA[2:0] = 5												
		6	48-55	repeat Sub-Loop 0, but BA[2:0] = 6												
		7	56-63	repeat Sub-Loop 0, but BA[2:0] = 7												

a) DM must be driven LOW all the time. DQS, $\overline{DQS}$ are used according to RD Commands, otherwise MID-LEVEL.

b) Burst Sequence driven on each DQ signal by Read Command. Outside burst operation, DQ signals are MID-LEVEL.

Table 8 - IDD4W Measurement-Loop Pattern[a)]

CK, $\overline{CK}$	CKE	Sub-Loop	Cycle Number	Command	$\overline{CS}$	$\overline{RAS}$	$\overline{CAS}$	$\overline{WE}$	ODT	BA[2:0]	A[15:11]	A[10]	A[9:7]	A[6:3]	A[2:0]	Data[b)]
toggling	Static High	0	0	WR	0	1	0	0	1	0	00	0	0	0	0	00000000
			1	D	1	0	0	0	1	0	00	0	0	0	0	-
			2,3	$\overline{D}$,$\overline{D}$	1	1	1	1	1	0	00	0	0	0	0	-
			4	WR	0	1	0	0	1	0	00	0	0	F	0	00110011
			5	D	1	0	0	0	1	0	00	0	0	F	0	-
			6,7	$\overline{D}$,$\overline{D}$	1	1	1	1	1	0	00	0	0	F	0	-
		1	8-15	repeat Sub-Loop 0, but BA[2:0] = 1												
		2	16-23	repeat Sub-Loop 0, but BA[2:0] = 2												
		3	24-31	repeat Sub-Loop 0, but BA[2:0] = 3												
		4	32-39	repeat Sub-Loop 0, but BA[2:0] = 4												
		5	40-47	repeat Sub-Loop 0, but BA[2:0] = 5												
		6	48-55	repeat Sub-Loop 0, but BA[2:0] = 6												
		7	56-63	repeat Sub-Loop 0, but BA[2:0] = 7												

a) DM must be driven LOW all the time. DQS, $\overline{DQS}$ are used according to WR Commands, otherwise MID-LEVEL.
b) Burst Sequence driven on each DQ signal by Write Command. Outside burst operation, DQ signals are MID-LEVEL.

Table 9 - IDD5B Measurement-Loop Pattern[a)]

CK, $\overline{CK}$	CKE	Sub-Loop	Cycle Number	Command	$\overline{CS}$	$\overline{RAS}$	$\overline{CAS}$	$\overline{WE}$	ODT	BA[2:0]	A[15:11]	A[10]	A[9:7]	A[6:3]	A[2:0]	Data[b)]
toggling	Static High	0	0	REF	0	0	0	1	0	0	0	0	0	0	0	-
		1	1.2	D, D	1	0	0	0	0	0	00	0	0	0	0	-
			3,4	$\overline{D}$, $\overline{D}$	1	1	1	1	0	0	00	0	0	F	0	-
			5...8	repeat cycles 1...4, but BA[2:0] = 1												
			9...12	repeat cycles 1...4, but BA[2:0] = 2												
			13...16	repeat cycles 1...4, but BA[2:0] = 3												
			17...20	repeat cycles 1...4, but BA[2:0] = 4												
			21...24	repeat cycles 1...4, but BA[2:0] = 5												
			25...28	repeat cycles 1...4, but BA[2:0] = 6												
			29...32	repeat cycles 1...4, but BA[2:0] = 7												
		2	33...nRFC-1	repeat Sub-Loop 1, until nRFC - 1. Truncate, if necessary.												

a) DM must be driven LOW all the time. DQS, $\overline{DQS}$ are MID-LEVEL.
b) DQ signals are MID-LEVEL.

Table 10 - IDD7 Measurement-Loop Pattern[a)]

ATTENTION! Sub-Loops 10-19 have inverse A[6:3] Pattern and Data Pattern than Sub-Loops 0-9

CK, $\overline{CK}$	CKE	Sub-Loop	Cycle Number	Command	$\overline{CS}$	$\overline{RAS}$	$\overline{CAS}$	$\overline{WE}$	ODT	BA[2:0]	A[15:11]	A[10]	A[9:7]	A[6:3]	A[2:0]	Data[b)]
toggling	Static High	0	0	ACT	0	0	1	1	0	0	00	0	0	0	0	-
			1	RDA	0	1	0	1	0	0	00	1	0	0	0	00000000
			2	D	1	0	0	0	0	0	00	0	0	0	0	-
			...	repeat above D Command until nRRD - 1												
		1	nRRD	ACT	0	0	1	1	0	1	00	0	0	F	0	-
			nRRD+1	RDA	0	1	0	1	0	1	00	1	0	F	0	00110011
			nRRD+2	D	1	0	0	0	0	1	00	0	0	F	0	-
			...	repeat above D Command until 2* nRRD - 1												
		2	2*nRRD	repeat Sub-Loop 0, but BA[2:0] = 2												
		3	3*nRRD	repeat Sub-Loop 1, but BA[2:0] = 3												
		4	4*nRRD	D	1	0	0	0	0	3	00	0	0	F	0	-
				Assert and repeat above D Command until nFAW - 1, if necessary												
		5	nFAW	repeat Sub-Loop 0, but BA[2:0] = 4												
		6	nFAW+nRRD	repeat Sub-Loop 1, but BA[2:0] = 5												
		7	nFAW+2*nRRD	repeat Sub-Loop 0, but BA[2:0] = 6												
		8	nFAW+3*nRRD	repeat Sub-Loop 1, but BA[2:0] = 7												
		9	nFAW+4*nRRD	D	1	0	0	0	0	7	00	0	0	F	0	-
				Assert and repeat above D Command until 2* nFAW - 1, if necessary												
		10	2*nFAW+0	ACT	0	0	1	1	0	0	00	0	0	F	0	-
			2*nFAW+1	RDA	0	1	0	1	0	0	00	1	0	F	0	00110011
			2&nFAW+2	D	1	0	0	0	0	0	00	0	0	F	0	-
				Repeat above D Command until 2* nFAW + nRRD - 1												
		11	2*nFAW+nRRD	ACT	0	0	1	1	0	1	00	0	0	0	0	-
			2*nFAW+nRRD+1	RDA	0	1	0	1	0	1	00	1	0	0	0	00000000
			2&nFAW+nRRD+2	D	1	0	0	0	0	1	00	0	0	0	0	-
				Repeat above D Command until 2* nFAW + 2* nRRD - 1												
		12	2*nFAW+2*nRRD	repeat Sub-Loop 10, but BA[2:0] = 2												
		13	2*nFAW+3*nRRD	repeat Sub-Loop 11, but BA[2:0] = 3												
		14	2*nFAW+4*nRRD	D	1	0	0	0	0	3	00	0	0	0	0	-
				Assert and repeat above D Command until 3* nFAW - 1, if necessary												
		15	3*nFAW	repeat Sub-Loop 10, but BA[2:0] = 4												
		16	3*nFAW+nRRD	repeat Sub-Loop 11, but BA[2:0] = 5												
		17	3*nFAW+2*nRRD	repeat Sub-Loop 10, but BA[2:0] = 6												
		18	3*nFAW+3*nRRD	repeat Sub-Loop 11, but BA[2:0] = 7												
		19	3*nFAW+4*nRRD	D	1	0	0	0	0	7	00	0	0	0	0	-
				Assert and repeat above D Command until 4* nFAW - 1, if necessary												

a) DM must be driven LOW all the time. DQS, $\overline{DQS}$ are used according to RD Commands, otherwise MID-LEVEL.

b) Burst Sequence driven on each DQ signal by Read Command. Outside burst operation, DQ signals are MID-LEVEL.

IDD Specifications

IDD values are for full operating range of voltage and temperature unless otherwise noted.

I_{DD} Specification

Speed Grade Bin	DDR3 - 1066 7-7-7	DDR3 - 1333 9-9-9	DDR3 - 1600 11-11-11	DDR3 - 1866 13-13-13	DDR3 - 2133 14-14-14	Unit	Notes
Symbol	Max.	Max.	Max.	Max.	Max.		
I_{DD0}	TBD	TBD	TBD	TBD	TBD	mA	x8
	TBD	TBD	TBD	TBD	TBD	mA	x16
I_{DD01}	TBD	TBD	TBD	TBD	TBD	mA	x8
	TBD	TBD	TBD	TBD	TBD	mA	x16
I_{DD2P0}	TBD	TBD	TBD	TBD	TBD	mA	x8
	TBD	TBD	TBD	TBD	TBD	mA	x16
I_{DD2P1}	TBD	TBD	TBD	TBD	TBD	mA	x8
	TBD	TBD	TBD	TBD	TBD	mA	x16
I_{DD2N}	TBD	TBD	TBD	TBD	TBD	mA	x8
	TBD	TBD	TBD	TBD	TBD	mA	x16
I_{DD2NT}	TBD	TBD	TBD	TBD	TBD	mA	x8
	TBD	TBD	TBD	TBD	TBD	mA	x16
I_{DD2Q}	TBD	TBD	TBD	TBD	TBD	mA	x8
	TBD	TBD	TBD	TBD	TBD	mA	x16
I_{DD3P}	TBD	TBD	TBD	TBD	TBD	mA	x8
	TBD	TBD	TBD	TBD	TBD	mA	x16
I_{DD3N}	TBD	TBD	TBD	TBD	TBD	mA	x8
	TBD	TBD	TBD	TBD	TBD	mA	x16
I_{DD4R}	TBD	TBD	TBD	TBD	TBD	mA	x8
	TBD	TBD	TBD	TBD	TBD	mA	x16
I_{DD4w}	TBD	TBD	TBD	TBD	TBD	mA	x8
	TBD	TBD	TBD	TBD	TBD	mA	x16
I_{DD5B}	TBD	TBD	TBD	TBD	TBD	mA	x8/x16
I_{DD6}	TBD	TBD	TBD	TBD	TBD	mA	x8
	TBD	TBD	TBD	TBD	TBD	mA	x16
I_{DD6} (Low Power)	TBD	TBD	TBD	TBD	TBD	mA	x8
	TBD	TBD	TBD	TBD	TBD	mA	x16
I_{DD6ET}	TBD	TBD	TBD	TBD	TBD	mA	x8
	TBD	TBD	TBD	TBD	TBD	mA	x16
I_{DD7}	TBD	TBD	TBD	TBD	TBD	mA	x8
	TBD	TBD	TBD	TBD	TBD	mA	x16

Notes:

1. Applicable for MR2 settings A6=0 and A7=0. Temperature range for IDD6 is 0 - 85°C.

2. Applicable for MR2 settings A6=0 and A7=1. Temperature range for IDD6ET is 0 - 95°C.

Input/Output Capacitance

Parameter	Symbol	DDR3-1066		DDR3-1333		DDR3-1600		DDR3-1866		DDR3-2133		Units	Notes
		Min	Max	Min	Max	Min	Max	Min	Max	Min	Max		
Input/output capacitance (DQ, DM, DQS, $\overline{DQS}$, TDQS, $\overline{TDQS}$)	C_{IO}	1.5	2.7	1.5	2.5	1.5	2.3	1.4	1.4	1.4	2.1	pF	1,2,3
Input capacitance, CK and $\overline{CK}$	C_{CK}	0.8	1.6	0.8	1.4	0.8	1.4	0.8	0.8	0.8	1.3	pF	2,3
Input capacitance delta CK and $\overline{CK}$	C_{DCK}	0	0.15	0	0.15	0	0.15	0	0	0	0.15	pF	2,3,4
Input capacitance delta, DQS and $\overline{DQS}$	C_{DDQS}	0	0.20	0	0.15	0	0.15	0	0	0	0.15	pF	2,3,5
Input capacitance (All other input-only pins)	C_I	0.75	1.35	0.75	1.3	0.75	1.3	0.75	0.75	0.75	1.2	pF	2,3,6
Input capacitance delta (All CTRL input-only pins)	C_{DI_CTRL}	-0.5	0.3	-0.4	0.2	-0.4	0.2	-0.4	0.2	-0.4	0.2	pF	2,3,7,8
Input capacitance delta (All ADD/CMD input-only pins)	$C_{DI_ADD_CMD}$	-0.5	0.5	-0.4	0.4	-0.4	0.4	-0.4	0.4	-0.4	0.4	pF	2,3,9,10
Input/output capacitance delta (DQ, DM, DQS, $\overline{DQS}$)	C_{DIO}	-0.5	0.3	-0.5	0.3	-0.5	0.3	-0.5	0.3	-0.5	0.3	pF	2,3,11
Input/output capacitance of ZQ pin	C_{ZQ}	-	3	-	3	-	3	-	3	-	3	pF	2,3,12

Notes:

1. Although the DM, TDQS and $\overline{TDQS}$ pins have different functions, the loading matches DQ and DQS.
2. This parameter is not subject to production test. It is verified by design and characterization. The capacitance is measured according to JEP147("PROCEDURE FOR MEASURING INPUT CAPACITANCE USING A VECTOR NETWORK ANALYZER(VNA)") with VDD, VDDQ, VSS,VSSQ applied and all other pins floating (except the pin under test, CKE, $\overline{RESET}$ and ODT as necessary). VDD=VDDQ=1.5V, VBIAS=VDD/2 and on-die termination off.
3. This parameter applies to monolithic devices only; stacked/dual-die devices are not covered here
4. Absolute value of C_{CK}-$C_{\overline{CK}}$.
5. Absolute value of C_{IO}(DQS)-C_{IO}($\overline{DQS}$).
6. C_I applies to ODT, $\overline{CS}$, CKE, A0-A15, BA0-BA2, $\overline{RAS}$, $\overline{CAS}$, $\overline{WE}$.
7. C_{DI_CTR} applies to ODT, $\overline{CS}$ and CKE.
8. C_{DI_CTRL}=C_I(CNTL) - 0.5 * C_I(CLK) + C_I($\overline{CLK}$))
9. $C_{DI_ADD_CMD}$ applies to A0-A15, BA0-BA2, $\overline{RAS}$, $\overline{CAS}$ and $\overline{WE}$.
10. $C_{DI_ADD_CMD}$=C_I(ADD_CMD) - 0.5*(C_I(CLK)+C_I($\overline{CLK}$))
11. C_{DIO}=C_{IO}(DQ) - 0.5*(C_{IO}(DQS)+C_{IO}($\overline{DQS}$))
12. Maximum external load capacitance an ZQ pin: 5 pF.

Standard Speed Bins

DDR3 SDRAM Standard Speed Bins include tCK, tRCD, tRP, tRAS and tRC for each corresponding bin.

DDR3-1066 Speed Bins

For specific Notes see "Speed Bin Table Notes" on page 31.

Speed Bin			DDR3-1066		Unit	Note
CL - nRCD - nRP			7-7-7			
Parameter		Symbol	min	max		
Internal read command to first data		t_{AA}	13.125	20	ns	
ACT to internal read or write delay time		t_{RCD}	13.125	—	ns	
PRE command period		t_{RP}	13.125	—	ns	
ACT to ACT or REF command period		t_{RC}	50.625	—	ns	
ACT to PRE command period		t_{RAS}	37.5	9 * tREFI	ns	
CL = 5	CWL = 5	$t_{CK(AVG)}$	3.0	3.3	ns	1, 2, 3, 4, 6, 12,13
	CWL = 6	$t_{CK(AVG)}$	Reserved		ns	4
CL = 6	CWL = 5	$t_{CK(AVG)}$	2.5	3.3	ns	1, 2, 3, 6
	CWL = 6	$t_{CK(AVG)}$	Reserved		ns	1, 2, 3, 4
CL = 7	CWL = 5	$t_{CK(AVG)}$	Reserved		ns	4
	CWL = 6	$t_{CK(AVG)}$	1.875	< 2.5	ns	1, 2, 3, 4
CL = 8	CWL = 5	$t_{CK(AVG)}$	Reserved		ns	4
	CWL = 6	$t_{CK(AVG)}$	1.875	< 2.5	ns	1, 2, 3
Supported CL Settings			5, 6, 7, 8		n_{CK}	13
Supported CWL Settings			5, 6		n_{CK}	

DDR3-1333 Speed Bins

For specific Notes see “Speed Bin Table Notes” on page 31.

Speed Bin			DDR3-1333		Unit	Note
CL - nRCD - nRP			9-9-9			
Parameter		Symbol	min	max		
Internal read command to first data		t_{AA}	13.5 (13.125)[5,11]	20	ns	
ACT to internal read or write delay time		t_{RCD}	13.5 (13.125)[5,11]	—	ns	
PRE command period		t_{RP}	13.5 (13.125)[5,11]	—	ns	
ACT to ACT or REF command period		t_{RC}	49.5 (49.125)[5,11]	—	ns	
ACT to PRE command period		t_{RAS}	36	9 * tREFI	ns	
CL = 5	CWL = 5	$t_{CK(AVG)}$	3.0	3.3	ns	1, 2, 3, 4, 7, 12,13
	CWL = 6, 7	$t_{CK(AVG)}$	Reserved		ns	4
CL = 6	CWL = 5	$t_{CK(AVG)}$	2.5	3.3	ns	1, 2, 3, 7
	CWL = 6	$t_{CK(AVG)}$	Reserved		ns	1, 2, 3, 4, 7
	CWL = 7	$t_{CK(AVG)}$	Reserved		ns	4
CL = 7	CWL = 5	$t_{CK(AVG)}$	Reserved		ns	4
	CWL = 6	$t_{CK(AVG)}$	1.875	< 2.5	ns	1, 2, 3, 4, 7
			(Optional)[5]			
	CWL = 7	$t_{CK(AVG)}$	Reserved		ns	1, 2, 3, 4
CL = 8	CWL = 5	$t_{CK(AVG)}$	Reserved		ns	4
	CWL = 6	$t_{CK(AVG)}$	1.875	< 2.5	ns	1, 2, 3, 7
	CWL = 7	$t_{CK(AVG)}$	Reserved		ns	1, 2, 3, 4
CL = 9	CWL = 5, 6	$t_{CK(AVG)}$	Reserved		ns	4
	CWL = 7	$t_{CK(AVG)}$	1.5	<1.875	ns	1, 2, 3, 4
CL = 10	CWL = 5, 6	$t_{CK(AVG)}$	Reserved		ns	4
	CWL = 7	$t_{CK(AVG)}$	1.5	<1.875	ns	1, 2, 3
			(Optional)		ns	5
Supported CL Settings			5, 6, 8, (7), 9, (10)		n_{CK}	
Supported CWL Settings			5, 6, 7		n_{CK}	

DDR3-1600 Speed Bins

For specific Notes see "Speed Bin Table Notes" on page 31.

Speed Bin			DDR3-1600		Unit	Note
CL - nRCD - nRP			11-11-11			
Parameter		Symbol	min	max		
Internal read command to first data		t_{AA}	13.75 (13.125)[5,11]	20	ns	
ACT to internal read or write delay time		t_{RCD}	13.75 (13.125)[5,11]	—	ns	
PRE command period		t_{RP}	13.75 (13.125)[5,11]	—	ns	
ACT to ACT or REF command period		t_{RC}	48.75 (48.125)[5,11]	—	ns	
ACT to PRE command period		t_{RAS}	35	9 * tREFI	ns	
CL = 5	CWL = 5	$t_{CK(AVG)}$	3.0	3.3	ns	1, 2, 3, 4, 8, 12,13
	CWL = 6, 7	$t_{CK(AVG)}$	Reserved		ns	4
CL = 6	CWL = 5	$t_{CK(AVG)}$	2.5	3.3	ns	1, 2, 3, 8
	CWL = 6	$t_{CK(AVG)}$	Reserved		ns	1, 2, 3, 4, 8
	CWL = 7	$t_{CK(AVG)}$	Reserved		ns	4
CL = 7	CWL = 5	$t_{CK(AVG)}$	Reserved		ns	4
	CWL = 6	$t_{CK(AVG)}$	1.875	< 2.5	ns	1, 2, 3, 4, 8
			(Optional)[5]			
	CWL = 7	$t_{CK(AVG)}$	Reserved		ns	1, 2, 3, 4, 8
	CWL = 8	$t_{CK(AVG)}$	Reserved		ns	4
CL = 8	CWL = 5	$t_{CK(AVG)}$	Reserved		ns	4
	CWL = 6	$t_{CK(AVG)}$	1.875	< 2.5	ns	1, 2, 3, 8
	CWL = 7	$t_{CK(AVG)}$	Reserved		ns	1, 2, 3, 4, 8
	CWL = 8	$t_{CK(AVG)}$	Reserved		ns	1, 2, 3, 4
CL = 9	CWL = 5, 6	$t_{CK(AVG)}$	Reserved		ns	4
	CWL = 7	$t_{CK(AVG)}$	1.5	<1.875	ns	1, 2, 3, 4, 8
			(Optional)[5]			
	CWL = 8	$t_{CK(AVG)}$	Reserved		ns	1, 2, 3, 4
CL = 10	CWL = 5, 6	$t_{CK(AVG)}$	Reserved		ns	4
	CWL = 7	$t_{CK(AVG)}$	1.5	<1.875	ns	1, 2, 3, 8
	CWL = 8	$t_{CK(AVG)}$	Reserved		ns	1, 2, 3, 4
CL = 11	CWL = 5, 6,7	$t_{CK(AVG)}$	Reserved		ns	4
	CWL = 8	$t_{CK(AVG)}$	1.25	<1.5	ns	1, 2, 3
Supported CL Settings			5, 6, (7), 8, (9), 10, 11		n_{CK}	
Supported CWL Settings			5, 6, 7, 8		n_{CK}	

DDR3-1866 Speed Bins

For specific Notes see "Speed Bin Table Notes" on page 31.

Speed Bin			DDR3-1866		Unit	Note
CL - nRCD - nRP			13-13-13			
Parameter		Symbol	min	max		
Internal read command to first data		t_{AA}	13.91 (13.125)[5,14]	20	ns	
ACT to internal read or write delay time		t_{RCD}	13.91 (13.125)[5,14]	—	ns	
PRE command period		t_{RP}	13.91 (13.125)[5,14]	—	ns	
ACT to PRE command period		t_{RAS}	34	9 * tREFI	ns	
ACT to ACT or PRE command period		t_{RC}	47.91 (47.125)[5,14]	-	ns	
CL = 5	CWL = 5	$t_{CK(AVG)}$	3.0	3.3	ns	1, 2, 3, 4, 9
	CWL = 6,7,8,9	$t_{CK(AVG)}$	Reserved		ns	4
CL = 6	CWL = 5	$t_{CK(AVG)}$	2.5	3.3	ns	1, 2, 3, 9
	CWL = 6	$t_{CK(AVG)}$	Reserved		ns	1, 2, 3, 4, 9
	CWL = 7,8,9	$t_{CK(AVG)}$	Reserved		ns	4
CL = 7	CWL = 5	$t_{CK(AVG)}$	Reserved		ns	4
	CWL = 6	$t_{CK(AVG)}$	1.875	< 2.5	ns	1, 2, 3, 4, 9
	CWL = 7,8,9	$t_{CK(AVG)}$	Reserved		ns	4
CL = 8	CWL = 5	$t_{CK(AVG)}$	Reserved		ns	4
	CWL = 6	$t_{CK(AVG)}$	1.875	< 2.5	ns	1, 2, 3, 9
	CWL = 7	$t_{CK(AVG)}$	Reserved		ns	1, 2, 3, 4, 9
	CWL = 8,9	$t_{CK(AVG)}$	Reserved		ns	4
CL = 9	CWL = 5, 6	$t_{CK(AVG)}$	Reserved		ns	4
	CWL = 7	$t_{CK(AVG)}$	1.5	<1.875	ns	1, 2, 3, 4, 9
	CWL = 8	$t_{CK(AVG)}$	Reserved		ns	1, 2, 3, 4, 9
	CWL = 9	$t_{CK(AVG)}$	Reserved		ns	4
CL = 10	CWL = 5, 6	$t_{CK(AVG)}$	Reserved		ns	4
	CWL = 7	$t_{CK(AVG)}$	1.5	<1.875	ns	1, 2, 3, 9
	CWL = 8	$t_{CK(AVG)}$	Reserved		ns	1, 2, 3, 4, 9
CL = 11	CWL = 5,6,7	$t_{CK(AVG)}$	Reserved		ns	4
	CWL = 8	$t_{CK(AVG)}$	1.25	<1.5	ns	1, 2, 3, 4, 9
	CWL = 9	$t_{CK(AVG)}$	Reserved		ns	1, 2, 3, 4
CL = 12	CWL = 5,6,7,8	$t_{CK(AVG)}$	Reserved		ns	4
	CWL = 9	$t_{CK(AVG)}$	Reserved		ns	1,2,3,4
CL = 13	CWL = 5,6,7,8	$t_{CK(AVG)}$	Reserved		ns	4
	CWL = 9	$t_{CK(AVG)}$	1.07	<1.25	ns	1, 2, 3
Supported CL Settings			6, 8, 10, 13, (7), (9), (11)		n_{CK}	
Supported CWL Settings			5, 6, 7, 8, 9		n_{CK}	

DDR3-2133 Speed Bins

For specific notes see "Speed Bin Table Notes" on page 31.

Speed Bin			DDR3-2133		Unit	Note
CL - nRCD - nRP			14-14-14			
Parameter		Symbol	min	max		
Internal read command to first data		t_{AA}	13.09	20.0	ns	
ACT to internal read or write delay time		t_{RCD}	13.09	—	ns	
PRE command period		t_{RP}	13.09	—	ns	
ACT to PRE command period		t_{RAS}	33.0	9 * tREFI	ns	
ACT to ACT or PRE command period		t_{RC}	46.09	-	ns	
CL = 5	CWL = 5	$t_{CK(AVG)}$	Reserved		ns	1, 2, 3, 4, 10
	CWL = 6,7,8,9,10	$t_{CK(AVG)}$	Reserved		ns	4
CL = 6	CWL = 5	$t_{CK(AVG)}$	2.5	3.3	ns	1, 2, 3, 10
	CWL = 6	$t_{CK(AVG)}$	Reserved		ns	1, 2, 3, 4, 10
	CWL = 7,8,910	$t_{CK(AVG)}$	Reserved		ns	4
CL = 7	CWL = 5	$t_{CK(AVG)}$	Reserved		ns	4
	CWL = 6	$t_{CK(AVG)}$	1.875	< 2.5	ns	1, 2, 3, 10
	CWL = 7	$t_{CK(AVG)}$	Reserved		ns	1, 2, 3, 4, 10
	CWL = 8,9,10	$t_{CK(AVG)}$	Reserved		ns	4
CL = 8	CWL = 5	$t_{CK(AVG)}$	Reserved		ns	4
	CWL = 6	$t_{CK(AVG)}$	1.875	< 2.5	ns	1, 2, 3, 10
	CWL = 7	$t_{CK(AVG)}$	Reserved		ns	1, 2, 3, 4, 10
	CWL = 8,9,10	$t_{CK(AVG)}$	Reserved		ns	4
CL = 9	CWL = 5, 6	$t_{CK(AVG)}$	Reserved		ns	4
	CWL = 7	$t_{CK(AVG)}$	1.5	<1.875	ns	1, 2, 3, 10
	CWL = 8	$t_{CK(AVG)}$	Reserved		ns	1, 2, 3, 4, 10
	CWL = 9,10	$t_{CK(AVG)}$	Reserved		ns	4
CL = 10	CWL = 5, 6	$t_{CK(AVG)}$	Reserved		ns	4
	CWL = 7	$t_{CK(AVG)}$	1.5	<1.875	ns	1, 2, 3, 10
	CWL = 8	$t_{CK(AVG)}$	Reserved		ns	1, 2, 3, 4, 10
	CWL = 9	$t_{CK(AVG)}$	Reserved		ns	1, 2, 3, 4, 10
	CWL = 10	$t_{CK(AVG)}$	Reserved		ns	4
CL = 11	CWL = 5,6,7	$t_{CK(AVG)}$	Reserved		ns	4
	CWL = 8	$t_{CK(AVG)}$	1.25	<1.5	ns	1, 2, 3, 10
	CWL = 9	$t_{CK(AVG)}$	Reserved		ns	1, 2, 3, 4, 10
	CWL = 10	$t_{CK(AVG)}$	Reserved		ns	1, 2, 3, 4
CL = 12	CWL = 5,6,7,8	$t_{CK(AVG)}$	Reserved		ns	4
	CWL = 9	$t_{CK(AVG)}$	Reserved		ns	1, 2, 3, 4, 10
	CWL = 10	$t_{CK(AVG)}$	Reserved		ns	1, 2, 3, 4
CL = 13	CWL = 5,6,7,8	$t_{CK(AVG)}$	Reserved		ns	4
	CWL = 9	$t_{CK(AVG)}$	1.07	<1.25	ns	1, 2, 3, 10
	CWL = 10	$t_{CK(AVG)}$	Reserved			1, 2, 3, 4
CL = 14	CWL = 5,6,7,8,9	$t_{CK(AVG)}$	Reserved		ns	4
	CWL = 10	$t_{CK(AVG)}$	0.935	<1.07	ns	1, 2, 3
Supported CL Settings			5, 6, 7, 8, 9, 10, 11, 12, 13, 14		n_{CK}	
Supported CWL Settings			5, 6, 7, 8, 9, 10		n_{CK}	

Speed Bin Table Notes

Absolute Specification (T_{OPER}; V_{DDQ} = V_{DD} = 1.5V +/- 0.075 V);

1. The CL setting and CWL setting result in tCK(AVG).MIN and tCK(AVG).MAX requirements. When making a selection of tCK(AVG), both need to be fulfilled: Requirements from CL setting as well as requirements from CWL setting.
2. tCK(AVG).MIN limits: Since CAS Latency is not purely analog - data and strobe output are synchronized by the DLL - all possible intermediate frequencies may not be guaranteed. An application should use the next smaller JEDEC standard tCK(AVG) value (3.0, 2.5, 1.875, 1.5, or 1.25 ns) when calculating CL [nCK] = tAA [ns] / tCK(AVG) [ns], rounding up to the next 'Supported CL', where tCK(AVG) = 3.0 ns should only be used for CL = 5 calculation.
3. tCK(AVG).MAX limits: Calculate tCK(AVG) = tAA.MAX / CL SELECTED and round the resulting tCK(AVG) down to the next valid speed bin (i.e. 3.3ns or 2.5ns or 1.875 ns or 1.25 ns). This result is tCK(AVG).MAX corresponding to CL SELECTED.
4. 'Reserved' settings are not allowed. User must program a different value.
5. 'Optional' settings allow certain devices in the industry to support this setting, however, it is not a mandatory feature. Refer to SK Hynix DIMM data sheet and/or the DIMM SPD information if and how this setting is supported.
6. Any DDR3-1066 speed bin also supports functional operation at lower frequencies as shown in the table which are not subject to Production Tests but verified by Design/Characterization.
7. Any DDR3-1333 speed bin also supports functional operation at lower frequencies as shown in the table which are not subject to Production Tests but verified by Design/Characterization.
8. Any DDR3-1600 speed bin also supports functional operation at lower frequencies as shown in the table which are not subject to Production Tests but verified by Design/Characterization.
9. Any DDR3-1866 speed bin also supports functional operation at lower frequencies as shown in the table which are not subject to Production Tests but verified by Design/Characterization.
10. Any DDR3-2133 speed bin also supports functional operation at lower frequencies as shown in the table which are not subject to Production Tests but verified by Design/Characterization.
11. SK Hynix DDR3 SDRAM devices supporting optional down binning to CL=7 and CL=9, and tAA/tRCD/tRP must be 13.125 ns or lower. SPD settings must be programmed to match. For example, DDR3-1333H devices supporting down binning to DDR3-1066F should program 13.125 ns in SPD bytes for tAAmin (Byte 16), tRCDmin (Byte 18), and tRPmin (Byte 20). DDR3-1600K devices supporting down binning to DDR3-1333H or DDR3-1600F should program 13.125 ns in SPD bytes for tAAmin (Byte 16), tRCDmin (Byte 18), and tRPmin (Byte 20). Once tRP (Byte 20) is programmed to 13.125ns, tRCmin (Byte 21,23) also should be programmed accordingly. For example, 49.125ns (tRASmin + tRPmin = 36 ns + 13.125 ns) for DDR3-1333H and 48.125ns (tRASmin + tRPmin = 35 ns + 13.125 ns) for DDR3-1600K.
12. DDR3 800 AC timing apply if DRAM operates at lower than 800 MT/s data rate.
13. For CL5 support, refer to DIMM SPD information. DRAM is required to support CL5. CL5 is not mandatory in SPD coding.
14. SK Hynix DDR3 SDRAM devices supporting optional down binning to CL=11, CL=9 and CL=7, tAA/tRCD/tRPmin must be 13.125ns. SPD setting must be programed to match. For example, DDR3-1866M devices supporting down binning to DDR3-1600K or DDR3-1333H or 1066F should program 13.125ns in SPD bytes for tAAmin(byte 16), tRCDmin(byte 18) and tRPmin(byte 20) is programmed to 13.125ns, tRCmin(byte 21,23) also should be programmed accordingly. For example, 47.125ns (tRASmin + tRPmin = 34ns +13.125ns)

Package Dimensions

Package Dimension(x8): 78Ball Fine Pitch Ball Grid Array Outline

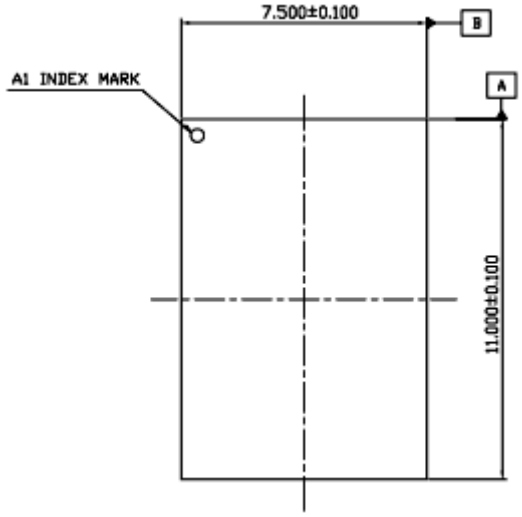

TOP VIEW

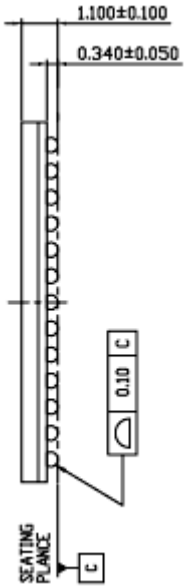

SIDE VIEW

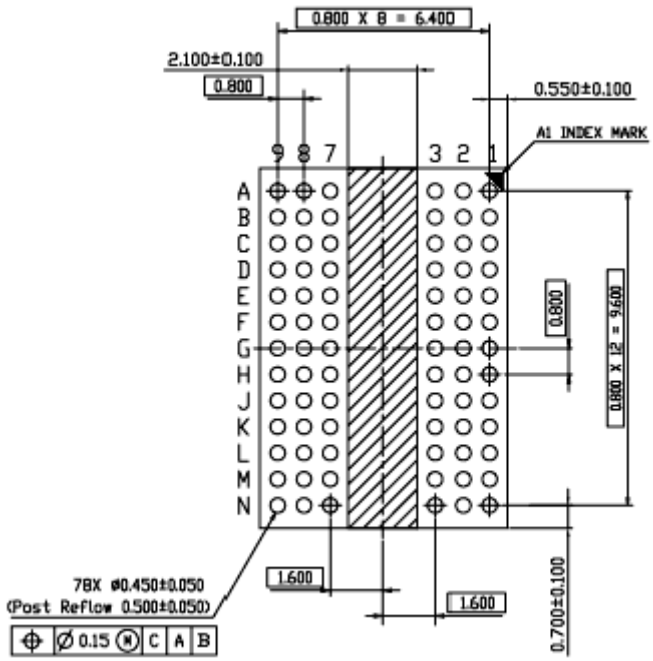

BOTTOM VIEW

Package Dimension(x16): 96Ball Fine Pitch Ball Grid Array Outline

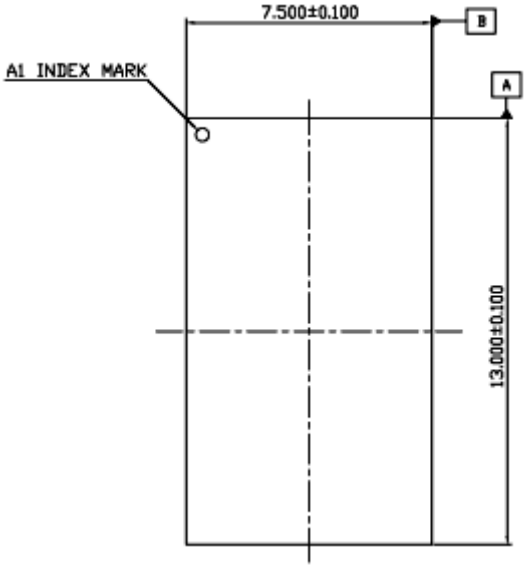

TOP VIEW

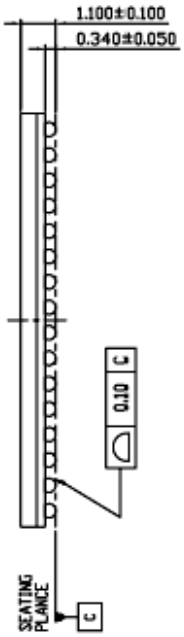

SIDE VIEW

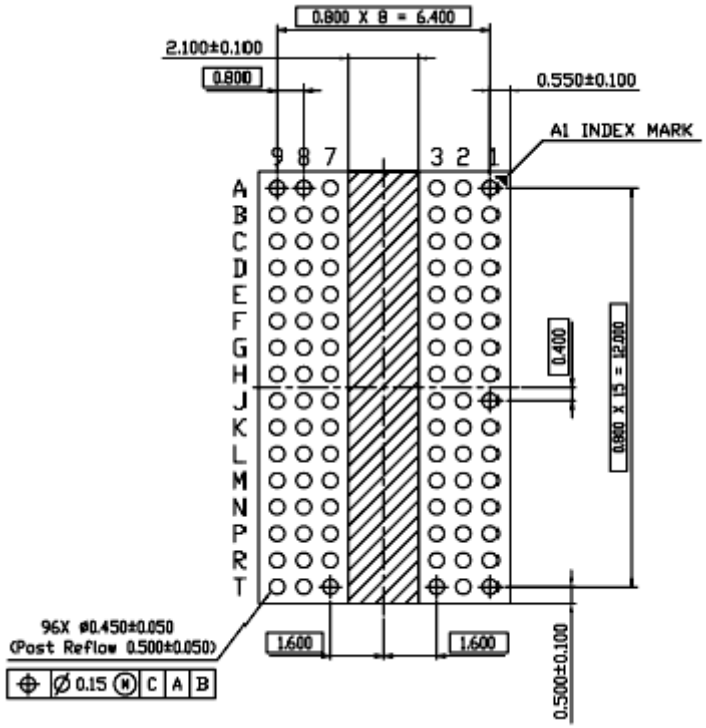

BOTTOM VIEW